Service Manual

Gas/Electric Refrigerators

MODELS

N109XXX

N109XIMXX

WARNING

DO NOT install this refrigerator in below deck marine applications. Do not install this refrigerator in fixed indoor cabin or other dwelling applications. This refrigerator must use only NORCOLD designed and approved outside air intake and exhaust ventilation for correct and safe operation. Any other ventilation could cause lethal combustion exhaust fumes and or/explosive propane gas fumes to be in the living area and/or below deck.

© 2004 THETFORD/NORCOLD. All rights reserved.

Publication No. 625352 (01-30-04)

TABLE OF CONTENTS

Introduction ---------- 1
About this Manual 1
Model Identification 1
Information Label 1
Cooling Unit Serial Number 1
Certification and Code Requirements 1
About Installation 1
Replacement Parts 1
Technical Assistance 1

Safety Awareness ---------- 3
Safety Notice 3
Attention Statements 3
Safety Statements 3

Specifications ---------- 4
N109X Models 4

Troubleshooting – Quick Reference Guide ---------- 5

N109X Displayed Fault Codes ---------- 6

Troubleshooting Flowcharts ---------- 7
Blank Display – Refrigerator does not turn on 7
no FL Fault Code – Burner failed to ignite or reignite 8
Sr Fault Code – Flame sense circuit failure 9
dc LO Fault Code – Low dc voltage 9
dc HI Fault Code – DC voltage high 10
dc rE Fault Code – DC relay stuck closed 10
no AC Fault Code – No ac power available 11
AC rE Fault Code – AC relay stuck closed 11
AC HI Fault Code – AC voltage high 12
AC LO Fault Code – AC voltage low 12
AC HE Fault Code – AC heater failed open 13
Food Compartment Lamp Switch 14
Lamp Switch Operation 14
dr Fault Code – Door open for more than 2 minutes 14
Lamp Switch Testing Procedure 14
Thermistor Failure Fault – Controls in Backup Operating System mode 15
Backup Operating System (BOS) 15
N109X Backup Operation 15
Power Board Resetting Procedure 16
no co Fault Code – No cooling detected by the controls 16

Ventilation ---------- 17
Roof Exhaust Venting 17
Air Intake Vent 17
Roof Exhaust Vent 17
Baffles 18
Vertical Angled Baffles 18
Double Sidewall Venting 19
Air Intake Vent 19
Sidewall Exhaust Vent 19

LP Gas System ---------- 22
Pressure Requirements 22
Testing for LP Gas Leaks 22
Components 23
Solenoid Gas Valve 23
Solenoid Gas Valve Connections 23
Orifice 23
Burner 23
Burner Tube 23
Flue 24
Heat Deflector 24
Flue Baffle 24
Flame Appearance 24
Burner Cleaning Procedure 25

Electrical Requirements and Components ---------- 27
DC Voltage Requirements and Polarity 27
Power Board DC Fuse 27
DC Power Wiring Requirements 27
AC/DC Converter as Power Source 27
Lamp Assembly 27
Divider Heater 27
AC Power Requirements 28
AC Heater 28
AC Heater Circuit Fuse 28
Power Board AC Power Cord 28
Ice Maker AC Power Cord 29
12 Vdc Ventilation Fan 29

Cooling Unit ---------- 30
Description 30
Heat Absorption 30
Leveled Operation 30
Gradual Decrease in Cooling Efficiency 30
Cooling Performance Monitoring Control 30
Resetting the Power Board 31
Cooling Unit Monitoring Control Operation 31
"no co" Fault Code 31
Cooling Unit Vertical Baffle 31
Refrigerant Leakage 31
Disposal of Cooling Unit 31
Cooling System Diagnostic Flowchart 32
Replacing the Cooling Unit 34
Removing the Refrigerator from the Enclosure 34
Removal of Cooling Unit 35
Installation of Replacement Cooling Unit 35
Reinstallation of Refrigerator into Enclosure 37

Electronic Components ---------- 38
Power Board 38
Removal–Power Board 38
Installation–Power Board 38

Controls ---------- 39
N109X Optical Control Assembly 39
Front Box 39
Removal and Installation of Optical Control Assembly . 39
Modes of Operation 40
AUTO AC Operation 40
AUTO LP Operation 40
AUTO 40
Shift from AUTO LP GAS to AUTO AC 40
No AC Power and No Flame 40
Troubleshooting No Flame and No AC Faults 40
AC Manual Mode 41
No AC Power or Loss of AC Power 41
AC Power Restored 41
Troubleshooting "no AC" Fault 41
LP Manual Mode 41
Flame Fails to Ignite or Flame Goes Out 41

Diagnostic Mode ---------- 42
Diagnostic Mode 42
Accessing the Diagnostic Mode 42
Changing Screens 42
Exiting the Diagnostic Mode 42
Screens and Diagnostic Segments Information 43

Wiring Pictorials and Diagrams ---------- 45

Ice Maker Components and Service ---------- 48
Specifications 48
Wire Harness 48

Water Fill Tube 49
Water Fill Line 49
12 Vdc Water Line Heater 49
Water Valve 50
Water Valve Replacement Procedure 50
Water Valve Service 51
Ice Maker Troubleshooting Chart 51
Replacing Ice Maker 52
Cycle Testing Ice Maker 53
Checking Water Valve Operation 53
Water Fill Adjustment 54
Checking Water Valve Solenoid Resistance 54
Checking Mold Heater Resistance 55
Checking Voltage to Motor 55
Winterization 55

About this Manual

This service manual provides maintenance, diagnostic, and repair information for **NORCOLD**® model N109X gas absorption refrigerators. It is a reference tool designed for technicians who are knowledgeable in the theory and operation of gas/electric absorption refrigerators, liquefied petroleum (LP) gas–propane–systems, and ac/dc electrical systems as installed in a variety of recreational vehicles (RV).

All information, illustrations, and specifications contained in this publication are based on the latest product information available at the time of publication. **NORCOLD**® reserves the right to make changes at any time without notice.

Model Identification

Model N109X is a 2-way refrigerator that can operate on ac power or LP gas. The electronic controls operate on 12 Vdc.

Letter(s) appended to the model number identify factory installed accessories. For example, an N109XIM is a 2-way refrigerator equipped with an ice maker.

Information Label

The information label is located in the upper right corner of the fresh food compartment just below the divider. See Figure 1, page 2. The label provides the following information:

- Serial number.
- Model number.
- LP gas (propane) pressure.
- Btu/hr.
- AC voltage and amperage.
- DC voltage and amperage.
- Design certification.
- Vent kit requirement.

Cooling Unit Serial Number

The cooling unit has a separate serial number that appears on the cooling unit bar code label. The label is affixed to the surface of the cooling unit leveling chamber. See Figure 2, page 2.

Certification and Code Requirements

NORCOLD® N109X gas/electric absorption refrigerators are certified under the latest edition of *ANSI Z21.19B* standards for installation in mobile homes or recreational vehicles. **NORCOLD**® N109X gas/electric absorption refrigerators are also certified with the Canadian Standards Association, *CAN/CGA-1.4-M94.*

Electrical components are UL compliant.

About Installation

Refrigerator installation must conform with the *N109X Installation Manual* for the **NORCOLD**® limited warranty to be in effect. Installation must also comply with applicable local codes and standards set by the cognizant certification agency.

Replacement Parts

Use only authorized **NORCOLD**® replacement parts. Generic parts do not meet **NORCOLD**® specifications for safety, reliability, and performance. The use of unauthorized aftermarket or generic replacement parts voids the refrigerator's limited warranty coverage.

Technical Assistance

If unable to resolve technical issues using the information provided in this manual, technical support for service technicians is available through the **NORCOLD**® Customer Service Center:

- Telephone: ..... 1-800-444-7210.
- Fax: ..... 1-937-497-3183.
- World Wide Web: ..... www.norcold.com/cda.

The following information is required to process technical support requests:

- Model number.
- Serial number.
- Make, model, and year of recreational vehicle.



Figure 1. Refrigerator information label location

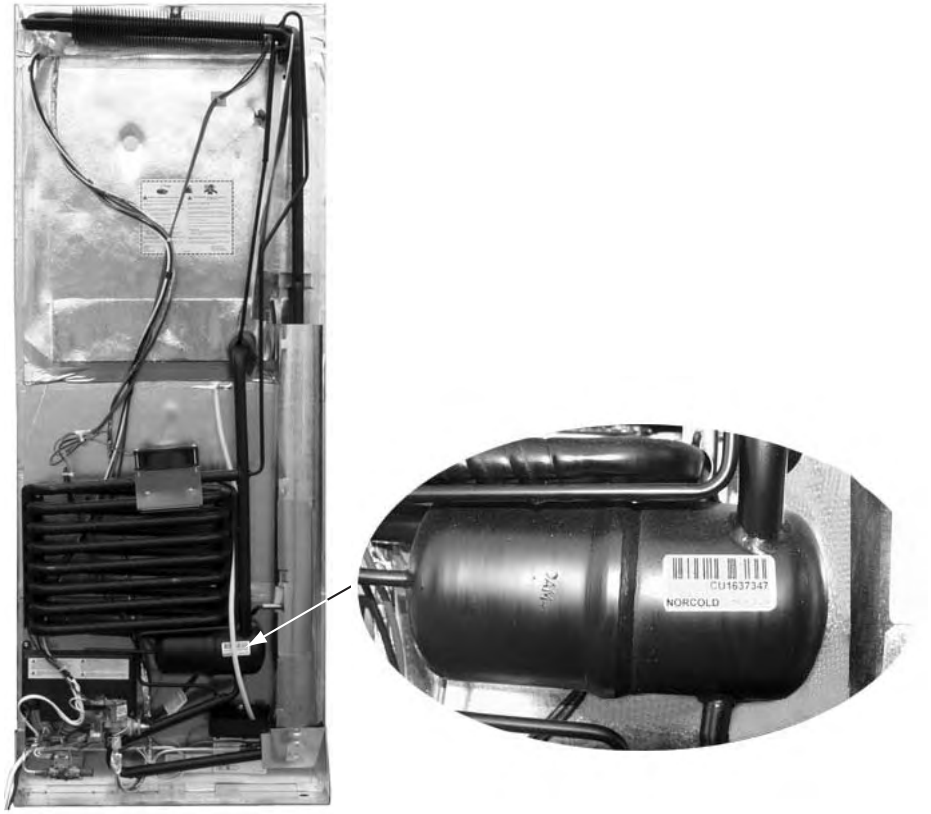

Figure 2. Cooling unit bar code label location

Safety Notice

It is not possible to anticipate all of the conceivable ways or conditions under which the refrigerator may be serviced or to provide cautions as to all of the possible hazards that may result. Standard and accepted safety precautions and equipment should be used when working on electrical circuits and handling toxic or flammable materials. Safety goggles and other required protection should be used during any process that can cause material to become airborne, such as removing a leaking cooling unit and cleaning components.

Attention Statements

The safety alert symbol ⚠ followed by the word ***WARNING*** or ***CAUTION*** identifies potential safety hazards or conditions.

The safety alert symbol with the appropriate heading appears on all safety labels posted on the refrigerator and safety awareness notices presented throughout this manual.

> ⚠ ***WARNING:***
> The above heading identifies hazards or conditions, which if ignored can cause serious injury, death, and/ or extensive property damage.

> ⚠ ***CAUTION:***
> The above heading identifies hazards, which if ignored can cause injury and/or property damage.

Safety Statements

⚠ **Do not** modify, alter, or equip the refrigerator to the use of any other fuel (natural gas, butane, etc.). N109X refrigerators are designed and equipped for the use of LP gas–*propane gas*–only.

⚠ Incorrect installation, adjustment, alteration, or maintenance of the refrigerator can cause personal injury, property damage, or both.

⚠ **Do not** smoke, light fires, or create sparks when working on the propane gas system.

⚠ **Do not** use an open flame for leak testing any of the propane gas system components. Propane gas is highly flammable and explosive.

⚠ Always use two wrenches to tighten or loosen LP gas connections. Damaged connections, piping, and components create the potential for gas leaks.

⚠ All electrical connections and repairs to the refrigerator must comply with all applicable codes. Refer to the certification and code requirements section of the *N109X Installation Manual* for more information.

⚠ **Do not** work on live electrical circuits. Turn off ac power and dc power sources before attempting to remove, service, or repair any of the refrigerator's electrical or electronic components.

⚠ **Do not** modify, bypass, or eliminate any of the refrigerator's electrical components, electronic circuits, or propane gas system components.

⚠ **Do not** wet or spray liquids on or near electrical connections or electronic components. Most liquids, including leak detection solutions, are electrically conductive and pose the potential for an electric shock hazard, short electrical components, damage electronic circuits, and/or ignite a fire.

⚠ **Do not** use leak test solutions that contain ammonia or chlorine. Ammonia and chlorine degrade copper and brass components.

⚠ **The cooling unit is a sealed system under pressure! Do not** try to repair or recharge the cooling unit. **Do not** bend, drop, weld, drill, puncture, saw, or strike the cooling unit.

⚠ **Handle a leaking cooling unit with extreme caution!** The cooling unit contains ammonia, hydrogen, and sodium chromate. Ammonia can cause severe skin and eye burns. Hydrogen is highly flammable, can ignite, and burns with an intense flame. Certain chromium compounds, such as sodium chromate, are carcinogenic.

⚠ **Do not** use extension cords. **Do not** remove the grounding prong from the refrigerator ac power cord. **Do not** use a two prong adapter to connect the refrigerator to the ac outlet.

⚠ **Do not** over-fuse electrical circuits. Use specified fuses and AWG wire sizes. The "Specifications" section of this manual provides fuse size information. Refer to the *N109X Installation Manual* for the correct AWG wire size specifications.

⚠ **Prevent child entrapment!** Before disposing of the refrigerator, remove all doors and fasten all shelves with retainers.

⚠ Some of the refrigerator's metal components have sharp corners and edges. Wear hand protection, such as cut resistant gloves, and exercise extreme care when handling the refrigerator.

⚠ Make sure all hardware, such as hinges and fasteners (retaining screws, etc.), is properly fastened.

SPECIFICATIONS

N109X Models

Storage volume
N109X ---------- 9.5 ft^3.

Rough opening dimensions (H x W x D)
N109X ---------- 59 7/8 in. x 23 1/2 in. x 24 in.

Decorative panels dimensions
Thickness ---------- 3/16 in.
Freezer door (H x W) ---------- 14 17/32 in. x 21 19/32 in.
Fresh food compartment door ---------- 38 5/8 in. x 21 19/32 in.

Controls
Type ---------- Electronic with built-in diagnostic function
ON/OFF/MODE/TEMP SET switches ---------- Raised pushbutton style
Temperature settings ---------- 1=cold, 9=coldest
Temperature sensor ---------- Thermistor, fin mounted (10th fin)

Off-level operating limits
Side-to-side ---------- 3 degrees maximum
Front-to-back ---------- 6 degrees maximum

DC power
Controls operating voltage ---------- 10.5 to 15.4 Vdc
DC fuse (F1 in power board) ---------- 5 A (tan color), automotive blade type

DC amp draws (at nominal 12 Vdc)
Automatic ignition ---------- 0.50 A
Divider heater ---------- 0.25 A
Fresh food compartment lamp ---------- 0.46 A
Gas valve ---------- 0.146 A
Fan ---------- 0.36 A

AC power
AC heater operating voltage requirements ---------- 108 to 132 Vac
Fuse ac heater circuit (F3 in power board) ---------- 5 A, 1/4 in. x 1 1/4 in. AGC type fast acting
AC heater rating ---------- 300 W/2.5 A @ 120 Vac (resistance of 48 Ω)

LP gas (propane)
Operating pressure ---------- 10.5 to 11.5 in. w.c.
Heat input ---------- 1500 Btu/h @ 11 in. w.c.
Orifice ---------- LP16
Gas ignition ---------- Automatic with flame sensing circuit
Electrode tip-to-burner air gap ---------- 1/8 to 3/16 in.

TROUBLESHOOTING – QUICK REFERENCE GUIDE

Problem	Possible Cause	Checks/Reference
The refrigerator does not turn ON.	No 12 Vdc power to refrigerator. Faulty/loose 12 Vdc connections. F1 fuse in power board open.	See page 7. Check 12 Vdc connections. Check fuse F1 (5 amp) in power board.
The refrigerator does not cool on ac power.	No ac power to refrigerator. F3 fuse in the power board open. AC heater failed open.	See page 11. Check fuse F3, (5 amp) in power board. See page 13.
The refrigerator does not cool efficiently on ac power.	Ventilation obstructed. AC voltage low.	Check enclosure for airflow obstructions. See page 12.
The refrigerator does not operate on LP gas.	No LP gas. Incorrect electrode tip-to-burner gap. Faulty spark/sense electrode assembly. Flame sensing circuit failure.	Check LP gas supply and valves. See page 8. See page 8. See page 9.
The refrigerator does not cool efficiently on LP gas.	Ventilation obstructed. Incorrect LP gas pressure. Dirty burner. Missing flue baffle. Heat deflector blocked.	Check enclosure for obstructed airflow. See page 8. See page 8. See page 24. See page 24.
The refrigerator does not cool on any of the power sources.	Ventilation obstructed. Cooling unit problem.	Check enclosure for obstructed airflow. See pages 16 and 30.

N109X DISPLAYED FAULT CODES

Code	Probable Cause	Reference
Blank Display Screen	Refrigerator turned off. No 12 Vdc to refrigerator. F1 fuse open.	See page 7.
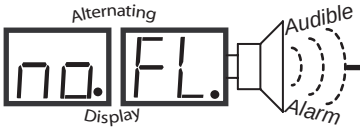	The burner failed to ignite or reignite.	See page 8.
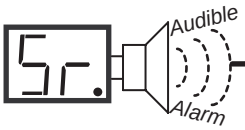	Flame sense circuit failure.	See page 9.
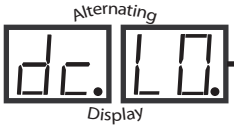	DC voltage low.	See page 9.
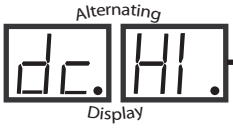	DC voltage high.	See page 10.
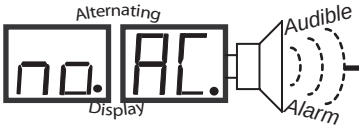	No ac power available to refrigerator. AC cord not plugged into power board. F3 fuse open.	See page 11.
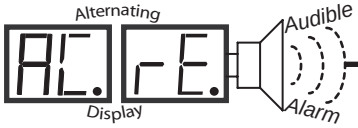	AC relay stuck closed.	See page 11.
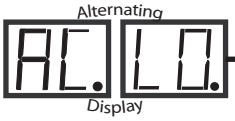	AC voltage low.	See page 12.
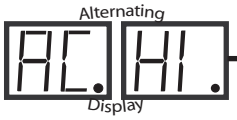	AC voltage high.	See page 12.
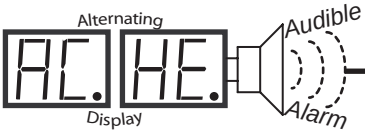	AC heater failed open.	See page 13.
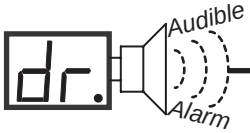	Fresh food compartment door open more than 2 minutes. Lamp reed relay switch faulty.	See page 14.
Flashing Temp Setting	Backup operating system in operation.	See page 15.
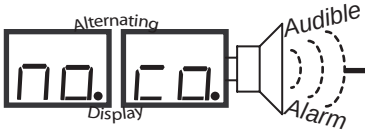	No cooling detected by the controls.	See pages 16 and 30.

Blank Display – Refrigerator does not turn on

Before beginning this procedure make sure:

- The RV dc power system is supplying 10.5 to 15.4 volts to the refrigerator.
- No other RV appliances or lighting circuits are connected to the refrigerator dc circuit.
- 12 Vdc input to the power board is wired according to the *N109X Installation Manual*.

Fault indicator displayed:

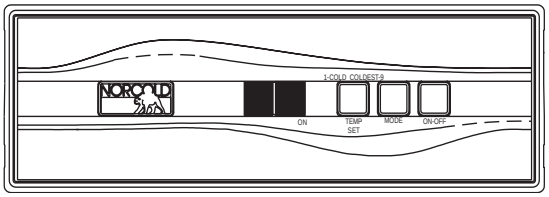

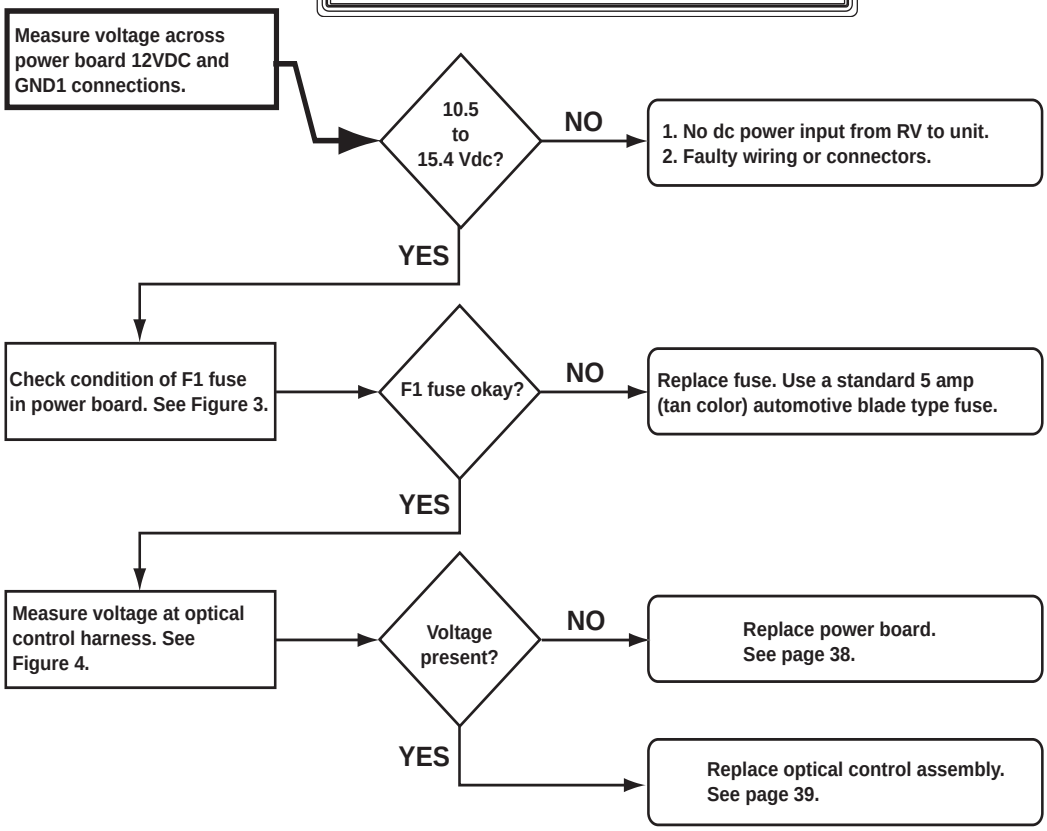

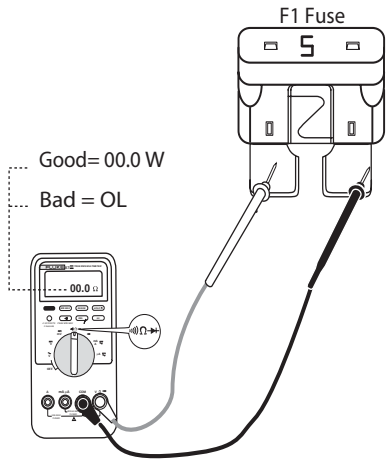

Figure 3. Checking the dc fuse continuity

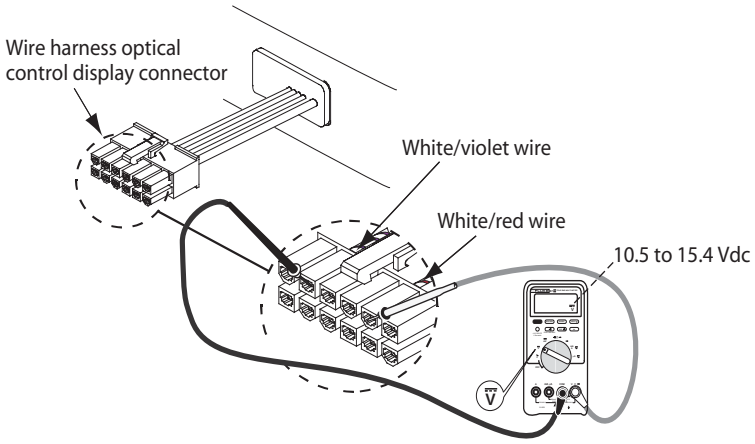

Figure 4. Measurement points for wire harness voltage

no FL Fault Code – Burner failed to ignite or reignite

Before beginning this procedure make sure:

- RV LP gas tank valve is open.
- Refrigerator solenoid gas valve manual shut-off is open.
- LP gas pressure at the solenoid gas valve pressure tap is 10.5 to 11.5 in. w.c.

Fault indicator displayed:

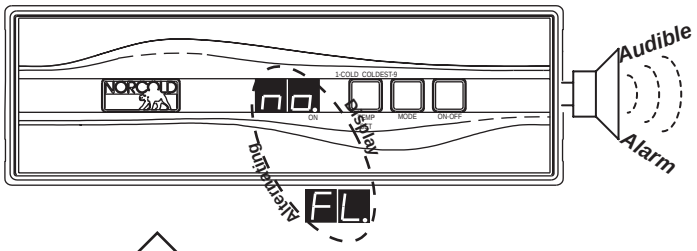

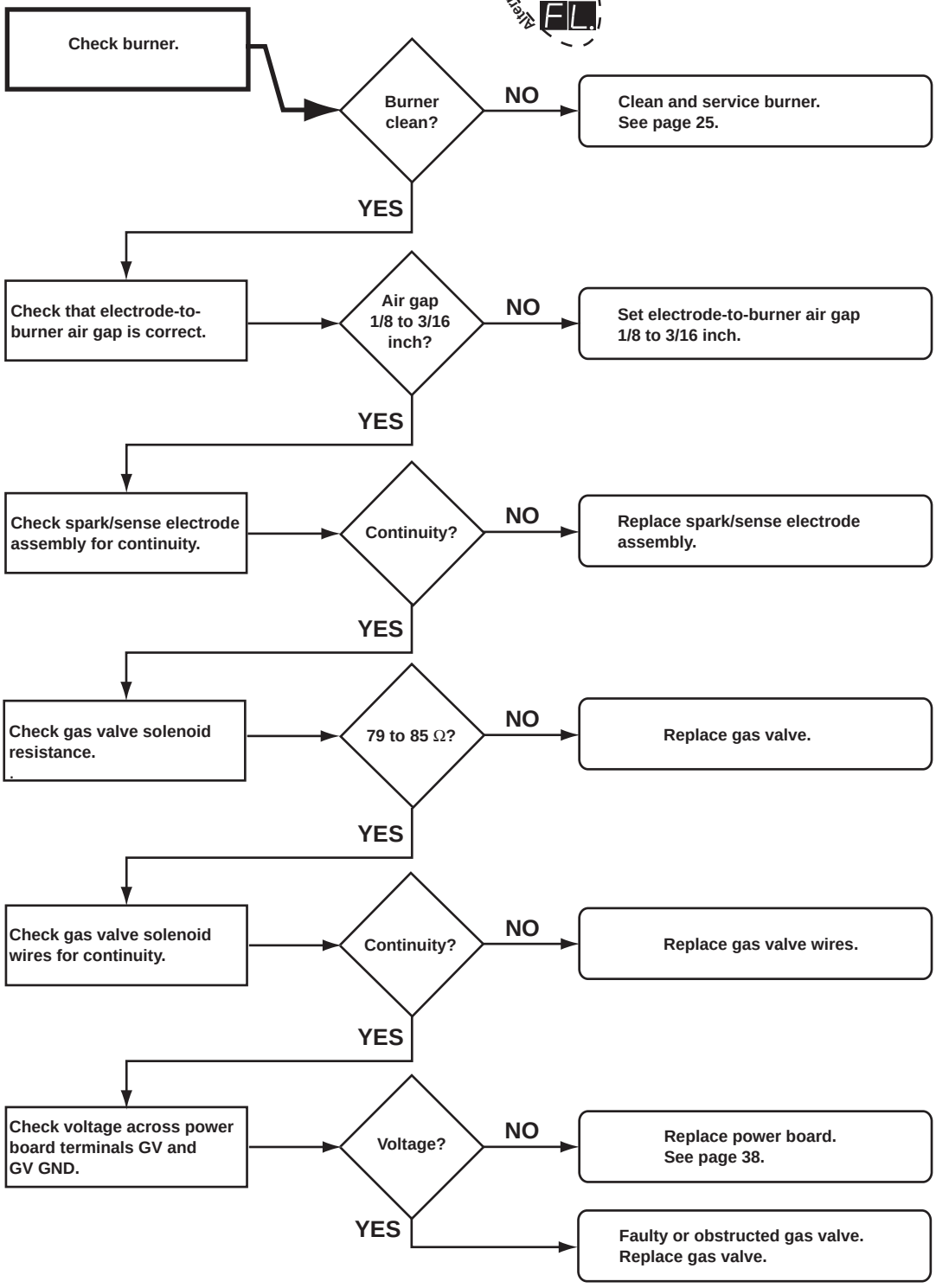

Sr Fault Code – Flame sense circuit failure

Fault indicator displayed:

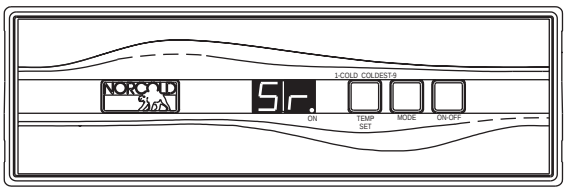

Flame sense circuit failure.

→ **Replace power board. See page 38.**

---

dc LO Fault Code – Low dc voltage

Before beginning this procedure:
- Make sure RV dc voltage to refrigerator is 10.5 to 15.4 volts.
- Determine if the "dc LO" fault code displays when the converter is the source of dc power.
- Make sure no other appliance or lighting circuit is connected to the refrigerator dc circuit.

Fault indicator displayed:

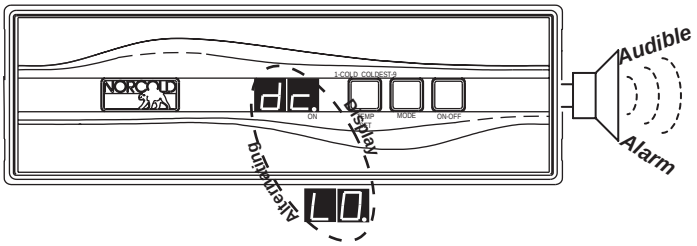

Check for dc voltage input to power board terminals 12VDC and GND1.

→ **Voltage lower than 10.5 Vdc?**

- **YES** → **Check RV 12 Vdc power supply to refrigerator.**
- **NO** → **See NOTE below to determine and correct low "dc LO" fault.**

NOTE

Electronic controls operate on 12 Vdc. When an ac/dc converter is used to supply dc power, the refrigerator circuit must be connected to the appliance output terminals of the converter (filtered side).

If the refrigerator circuit is connected to the unfiltered side, the ac ripple generated by the converter may cause a "dc LO" fault code to display.

To troubleshoot a "dc LO" fault, connect a charged 12 volt automotive battery to the power board. If the "dc LO" code clears, the fault was caused by unfiltered dc power.

If the "dc LO" code does not clear, replace the power board (see page 38).

dc HI Fault Code – DC voltage high

Before beginning this procedure:
- Make sure RV dc voltage to refrigerator is 10.5 to 15.4 volts.
- Determine if the "dc HI" fault code displays when the converter is the source of dc power.

Fault indicator displayed:

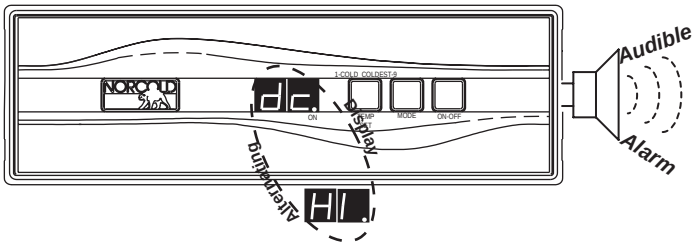

Check for dc voltage input to power board terminals 12VDC and GND1.

Voltage higher than 15.4 Vdc?

YES → **Check RV dc power distribution to refrigerator.**

NO → **See NOTE below to determine and correct "dc HI" fault.**

NOTE

Electronic controls operate on 12 Vdc. When an ac/dc converter is used to supply dc power, the refrigerator circuit must be connected to the appliance output terminals of the converter (filtered side).

If the refrigerator circuit is connected to the unfiltered side, the ac ripple generated by the converter may cause a "dc HI" fault code to display.

To troubleshoot a "dc HI" fault, connect a charged 12 volt automotive battery to the power board. If the "dc HI" code clears, the fault was caused by unfiltered dc power. If the "dc HI" code does not clear, replace the power board (see page 38).

dc rE Fault Code – DC relay stuck closed

Fault indicator displayed:

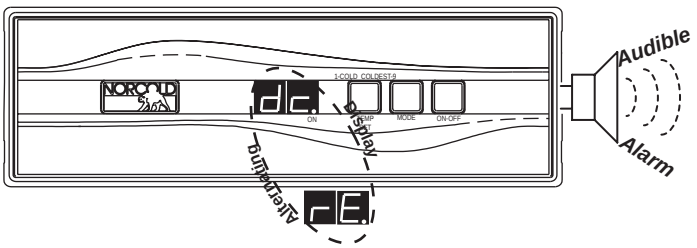

DC relay stuck closed.

Replace power board. See page 38.

no AC Fault Code – No ac power available

Before beginning this procedure make sure:

- No other problems exist with the RV ac power supply.
- No other appliances or lighting circuits are connected to the refrigerator ac circuit.
- Extension cords are not being used to supply ac power to the refrigerator.

Fault indicator displayed:

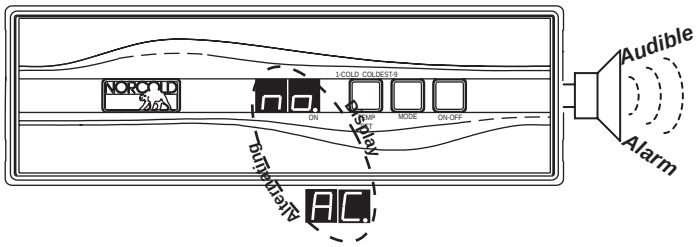

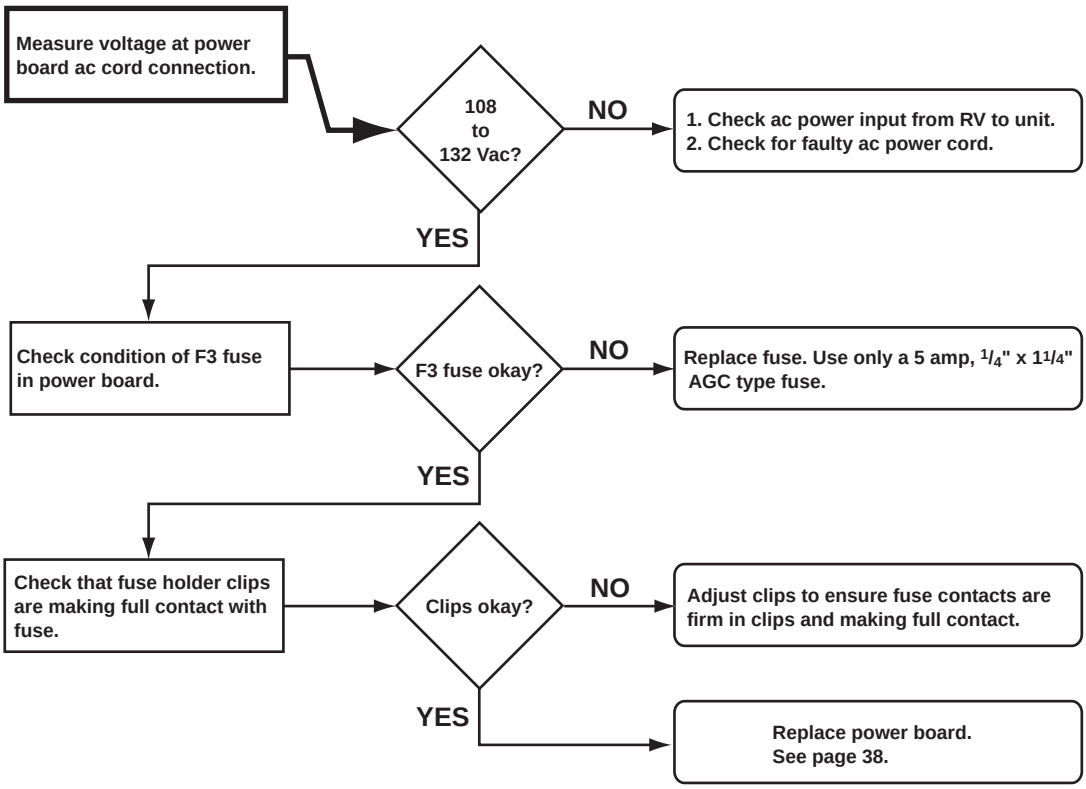

AC rE Fault Code – AC relay stuck closed

Fault indicator displayed:

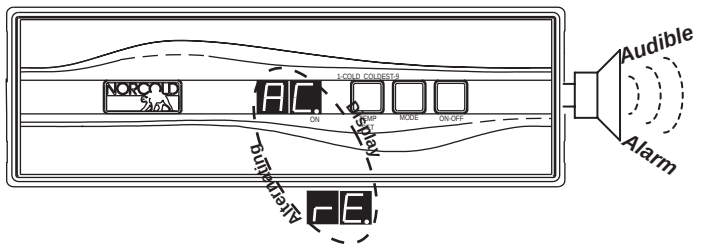



AC LO Fault Code – AC voltage low

Before beginning this procedure:
- Determine if a certain ac power source sets the "AC LO" fault code (generator, shore power, inverter).
- Make sure no other appliance or lighting circuit is connected to the refrigerator ac circuit.
- Make sure extension cords are not being used to supply ac power to the refrigerator.

Fault indicator displayed:

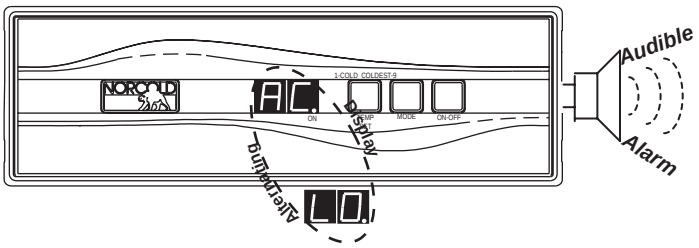

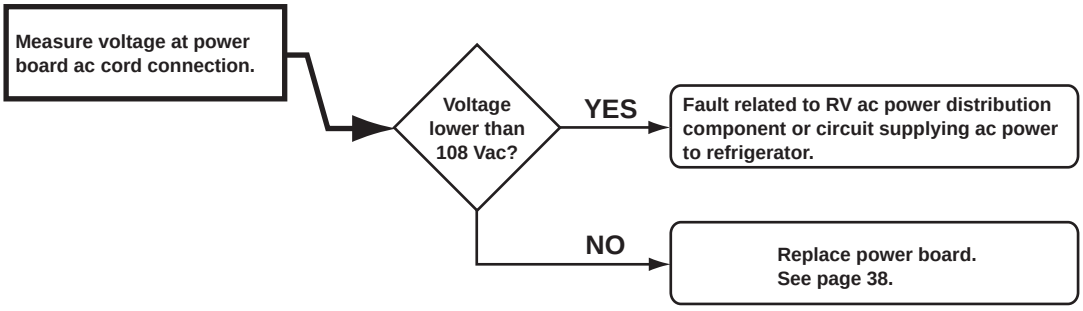

AC HI Fault Code – AC voltage high

Before beginning this procedure:
- Determine if a certain ac power source sets the "AC HI" fault code (generator, shore power, inverter).

Fault indicator displayed:

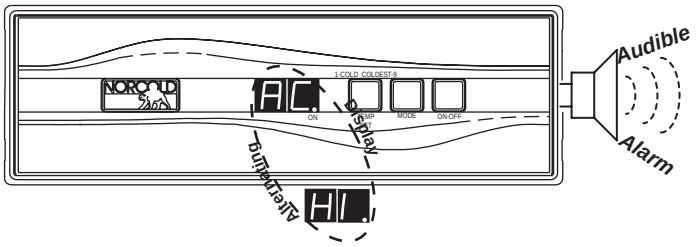

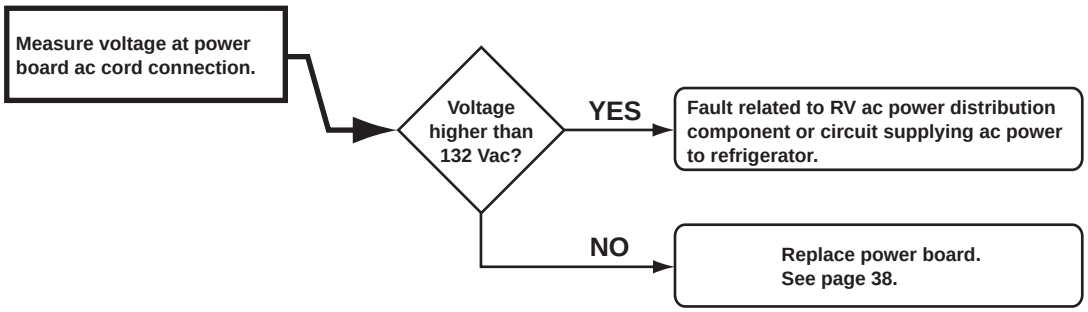

AC HE Fault Code – AC heater failed open

Before beginning this procedure make sure:

- RV ac voltage to the refrigerator is 108 to 132 volts.
- No other appliance or lighting circuit is connected to the refrigerator ac circuit.

Fault indicator displayed:

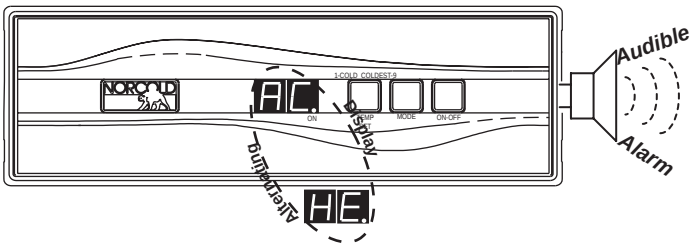

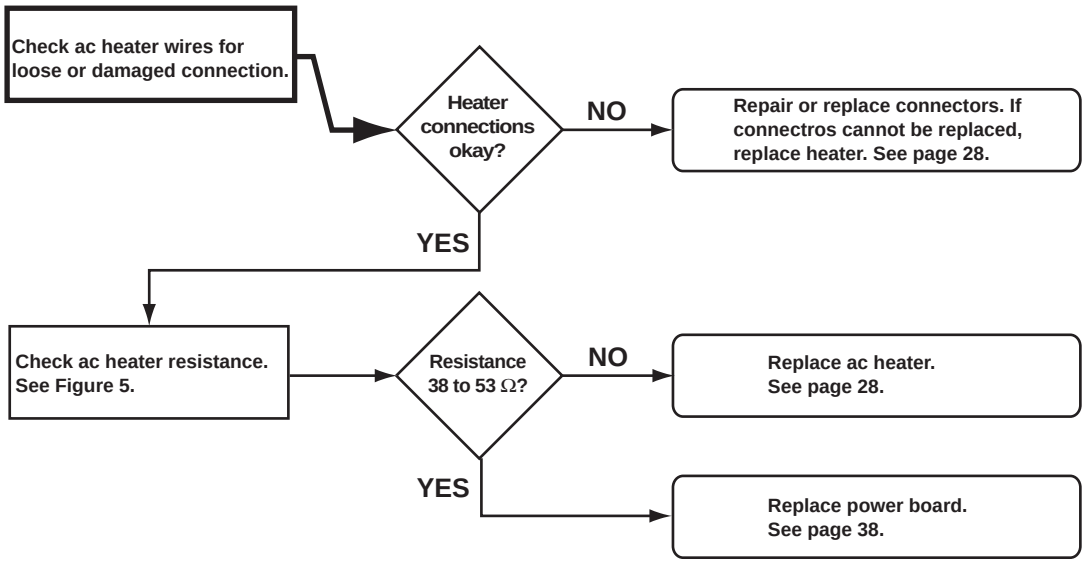

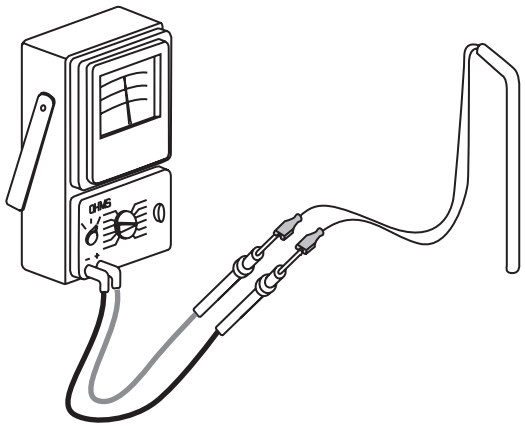

AC heater resistance 38 to 53 Ω.

Figure 5. Measuring ac heater resistance

dr Fault Code – Door open for more than 2 minutes

Before beginning this procedure make sure:
- Light/thermistor connector and wire harness connector are fully engaged and locked.

Fault indicator displayed:

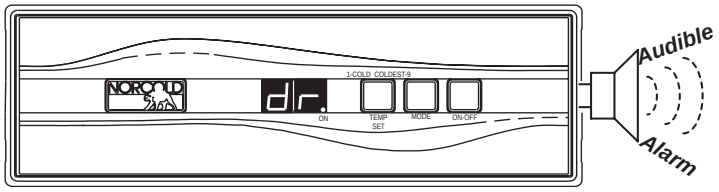

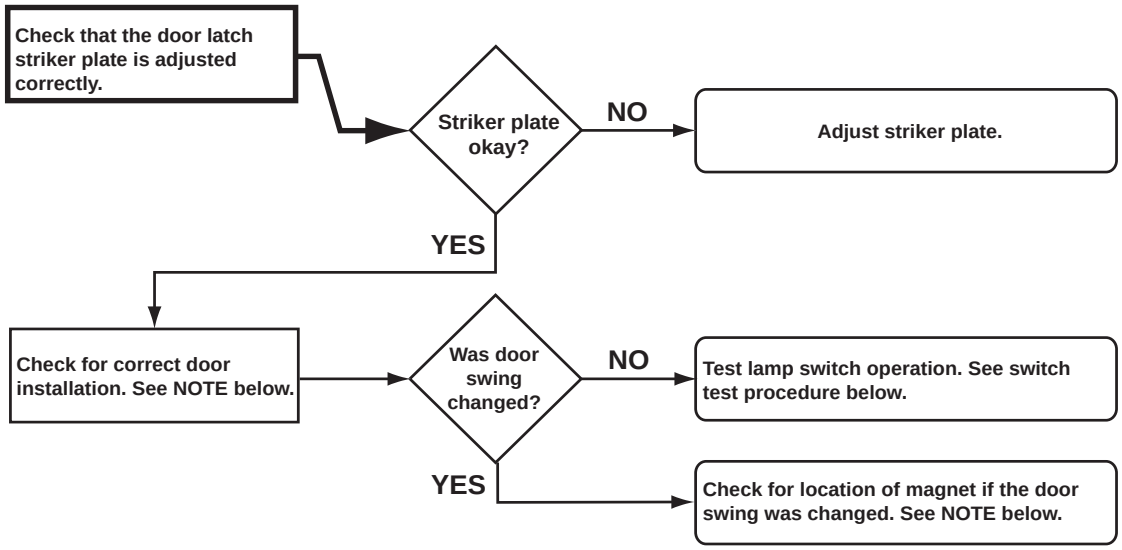

Food Compartment Lamp Switch

A reed relay switch turns the fresh food compartment light on and off. This switch is an integral component of the optical control display board circuitry.

Lamp Switch Operation

The lamp switch operates using a permanent magnet located underneath the fresh food compartment door's top trim. When the door is fully closed, the magnet maintains the switch contacts open (light off). Opening the door breaks the magnetic pull, which causes the switch contacts to close (light on).

NOTE

Always follow the instructions provided in the *Owner's Manual* to change the refrigerator door swing. The bottom door trim does not have a magnet. Inverting the doors will required non-approved modifications and will cause the fresh food compartment light to remain on when the door is closed.

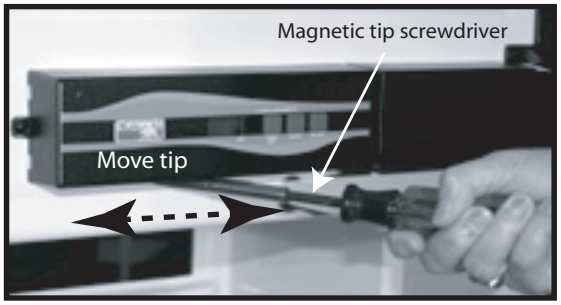

Figure 6. Lamp switch testing

Lamp Switch Testing Procedure

1. Slide a magnetic screwdriver tip or a small magnet on the underside of the optical control assembly as shown in Figure 6.
2. Check the food compartment light as the screwdriver tip is moved under the display:
   - The light should turn off when the magnetic screwdriver tip or magnet passes under the optical control assembly.
   - The light should turn on when the magnetic screwdriver tip or magnet is distanced from the underside of the optical control assembly.
3. If the light does not turn off when the magnet passes under the optical control display, replace the optical control display assembly. See page 39.

Thermistor Failure Fault – Controls in Backup Operating System mode

Before beginning this procedure:

- Make sure lamp/thermistor assembly is connected to the wire harness.

Fault indicator displayed:

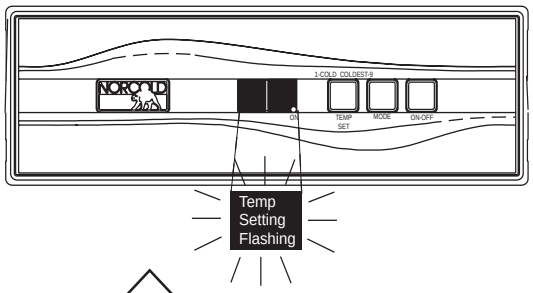

Check lamp/thermistor wire assembly and connector for dirty/broken connections.

Wires and connector good?

NO

Clean/repair terminals or connector as required. See Figure 7.

YES

Check thermistor resistance. See Figure 8 below.

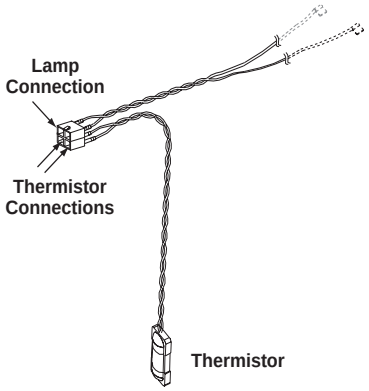

Figure 7. Thermistor terminals and connector

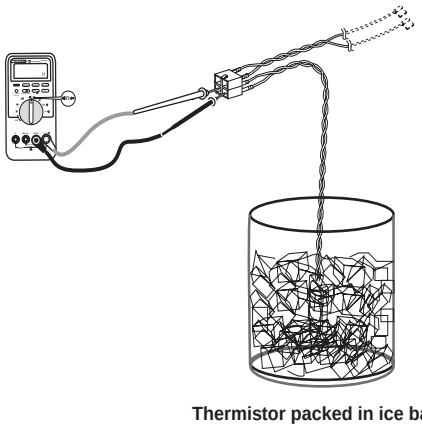

Thermistor packed in ice bath

Figure 8. Checking thermistor resistance

Temperature* (^{O}F)	Resistance* (kΩ)
85	8.1– 9.0
80	9.1–10.0
75	10.1–11.0
70	11.1–12.0
60	12.1–13.0
50	15.5–16.5
40	22.5–23.5
35	24.5–25.5
33	28.5–29.5
32	30.0–32.0

**Approximate Values*

Backup Operating System (BOS)

The backup operating system (BOS) is an electronically controlled duty cycle. It maintains the refrigerator in operation if the thermistor is disconnected or fails. The BOS maintains cooling by controlling the heat source selected. When the refrigerator is operating in BOS, the length of the cooling cycle is regulated by time rather than regulated by temperature.

To accomplish this, the BOS adjusts the length of the cooling cycle according to the temperature setting selected by the user; the higher the temperature setting, the longer the cooling cycle. For example, if the temperature setting is set to 5, raising the setting to 6 will lengthen the cooling cycle, making the cabinet colder.

When a warmer temperature is desired, changing the temperature setting to a lower number shortens the cooling cycle. For example, if the temperature setting is set to 6, lowering the setting to 5 will shorten the cooling cycle.

N109X Backup Operation

When the N109X controls shift to BOS operation, the temperature setting flashes for ten seconds when the TEMP button is pressed. After ten seconds, the "ON" LED displays.

no co Fault Code* – No cooling detected by the controls

Fault indicator displayed:

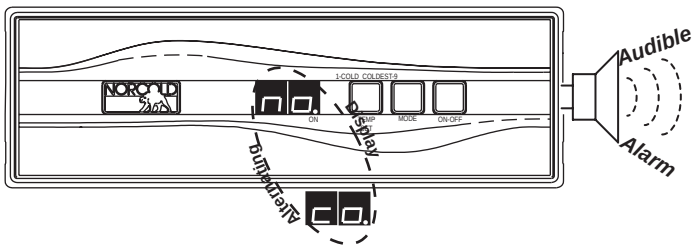

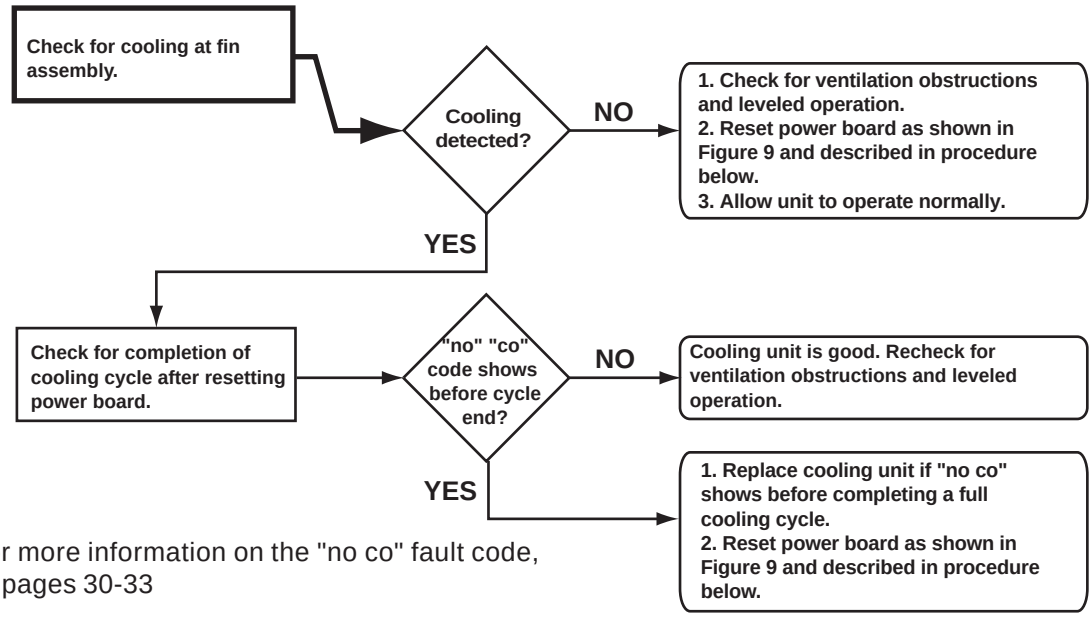

* For more information on the "no co" fault code, see pages 30-33

Power Board Resetting Procedure

1. Turn OFF the refrigerator.
2. Disconnect the following from power board:
   a. 12 Vdc positive and negative wires.
   b. AC power cord.
   c. Solenoid gas valve wires.
   d. Spark/sense electrode assembly wires.
3. Remove the power board cover.
4. Reconnect 12 Vdc positive and negative wire.
5. Turn ON the refrigerator.
6. Locate Pin 15 on 16 pin connector (P1). Pin 15 is the empty socket to the right of the white/violet wire on the top row. See Figure 9.
7. Using an insulated jumper wire, short Pin 15 to the power board ground lug for 10 - 15 seconds. A click sound will indicate when the controls are reset. See Figure 9.

NOTE

A jumper wire to short Pin 15 to ground can be made from a six inch long insulated 22 AWG wire with a 1/2 inch of insulation stripped from each end.

8. Turn OFF the refrigerator.
9. Turn ON refrigerator. If "no co" code displays, repeat steps 7 - 9.
10. Turn OFF the refrigerator.
11. Disconnect the 12 Vdc power positive and negative wires from the power board.
12. Install the power board cover.
13. Reconnect the following to the power board:
    a. Spark/sense electrode assembly wire.
    b. Solenoid gas valve wires.
    c. AC power cord.
    d. 12 Vdc positive and negative wires from the power board.
14. Place refrigerator in service.

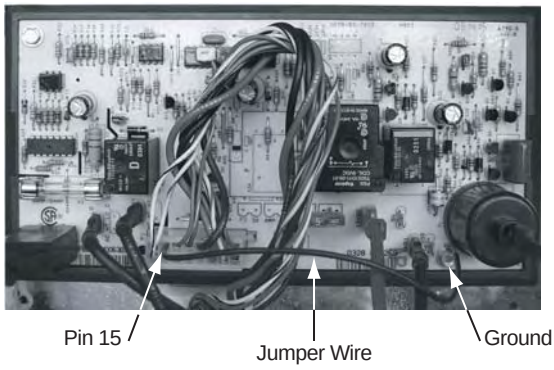

Figure 9. Resetting the power board

Roof Exhaust Venting

NOTE

The general guidelines for intake vents and roof exhaust vents presented in this section do not replace the instructions and/or guidelines provided in the *N109X Installation Manual* and the *Ventilation Guidelines For Gas/Electric Refrigerators*, part number 622090A (3-01). Refer to the *N109X Installation Manual* and *Ventilation Guidelines For Gas/Electric Refrigerators* for the latest information on approved vents, installation instructions, and special construction exceptions.

Air Intake Vent

The ventilation and combustion air flows into the enclosure through the air intake vent. See Figure 10 below and Figure 11, page 17.

The space between the air intake vent and the rear of the refrigerator must be kept clear at all times. Any obstruction in this area may cause serious ventilation problems. The air intake vent opening also provides access for servicing cooling unit components.

Roof Exhaust Vent

The heat absorbed by ventilation air and combustion gases flow out of the enclosure through the roof exhaust vent. See Figure 10 below and Figure 11, page 18.

The roof exhaust vent is equipped with a non-removable metal mesh screen that prevents leaves, debris, birds or rodents from getting into the enclosure. The roof cap is fastened to the exhaust vent with four screws. The cap is always installed with the slope towards the front of the RV.

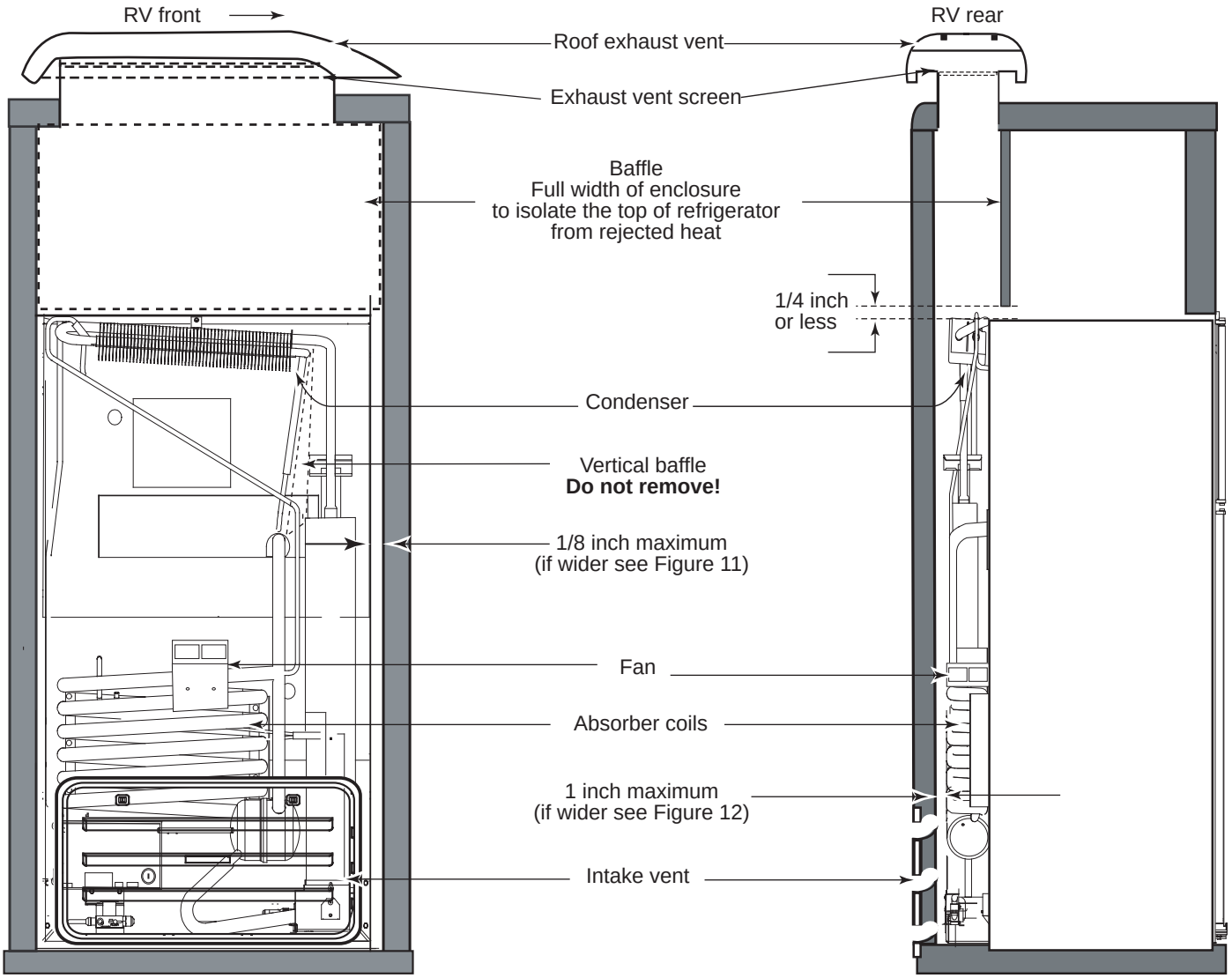

Figure 10. Roof exhaust venting arrangement

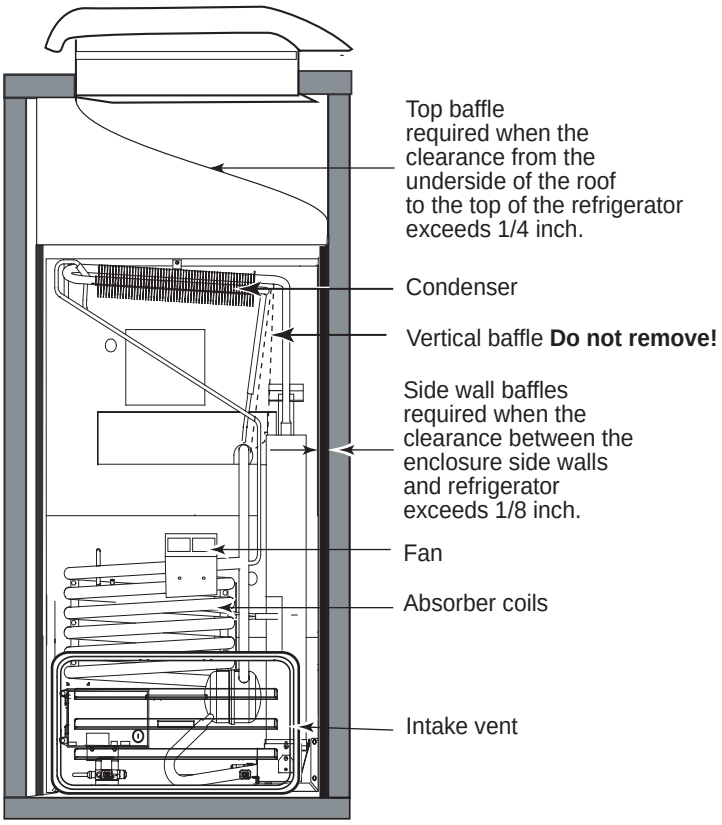

Figure 11. Back view–roof exhaust venting

Baffles

The minimum and maximum clearances for installing the refrigerator or correcting ventilation problems on roof vented units are listed in Table 1 below. Baffles are required whenever installations exceed maximum clearances listed in Table 1. Figure 11 and Figure 12 show baffle locations.

Vertical Angled Baffles

Vertical angled baffles are required when the roof exhaust vent is installed inboard of the condenser. Figure 12 shows the angled vertical baffles required on inboard roof vent installations. The horizontal wall baffles are required whenever the distance between the cooling unit and the interior surface of the outside wall exceeds one inch.

	Minimum	Maximum
Bottom	**0 inch**	**0 inch**
Sides (each)	**0 inch**	**1/8 inch**
Top	**0 inch**	**1/4 inch**
Rear	**0 inch**	**1 inch**

Table 1. Clearances for roof vented installations

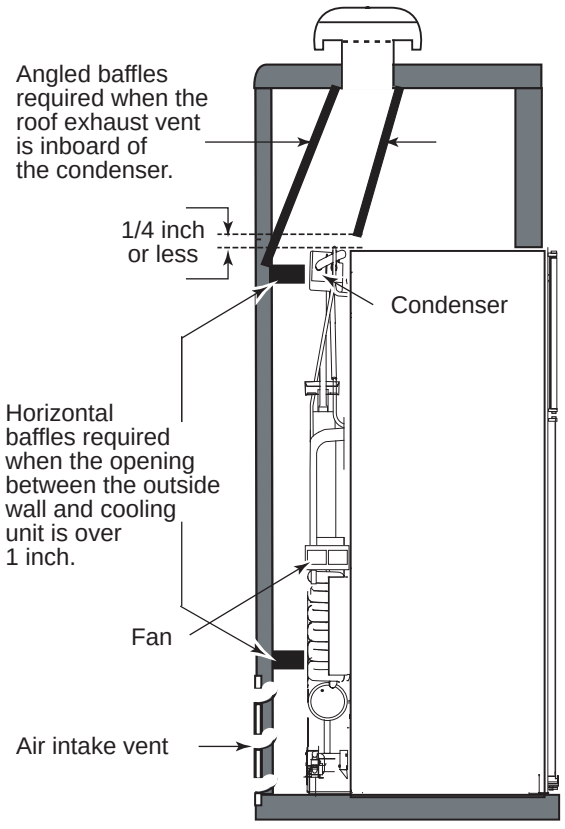

Figure 12. Baffles required for an inboard roof exhaust vent installation

Double Sidewall Venting

NOTE

The general guidelines for intake vents and roof exhaust vents presented in this section do not replace the instructions and/or guidelines provided in the *N109X Installation Manual* and the *Ventilation Guidelines For Gas/Electric Refrigerators*, part number 622090A (3-01). Refer to the *N109X Installation Manual* and *Ventilation Guidelines For Gas/Electric Refrigerators* for the latest information on approved vents, installation instructions, and special construction exceptions.

Because of increased installation of refrigerators in RV slide outs, NORCOLD has developed venting guidelines for double sidewall vent applications. This ensures NORCOLD refrigerators meet the ANSI Z21.19 standards for cooling performance when used in slide out applications.

The challenge with slide out installations is that the "chimney effect" (see page 30) that is present with roof vent installations is not as strong in slide outs. To improve the airflow of the chimney effect, sidewall vent installations must have fans and baffles. These fans and baffles direct the air flow through the surfaces of heat rejecting components. NORCOLD has determined that the following three key design considerations optimize heat removal in slide out applications.

- Refrigerators installed in slide outs must have a fan or fans to assist air flow. All N109X refrigerators have a factory installed fan.
- Fresh air must be directed to flow through the surface areas of the absorber coils, condenser fins, and the outer surface of the canister.
- Corners and structural pockets where heated air may stagnate must be reduced in size or completely eliminated.

Two baffles are required for the N109X model in double sidewall venting applications. It should be noted that baffle arrangements are different if the enclosure depth is greater or less than 26 inches. The baffle configurations are shown in Figure 13, page 20, and Figure 14, page 21.

Air Intake Vent

The ventilation and combustion air flow into the enclosure is through the air intake vent. See Figure 13, page 20, and Figure 14, page 21.

Sidewall Exhaust Vent

The heat absorbed by ventilation air and combustion gases flow out of the enclosure through the sidewall exhaust vent. See Figure 13, page 20, and Figure 14, page 21 for details.

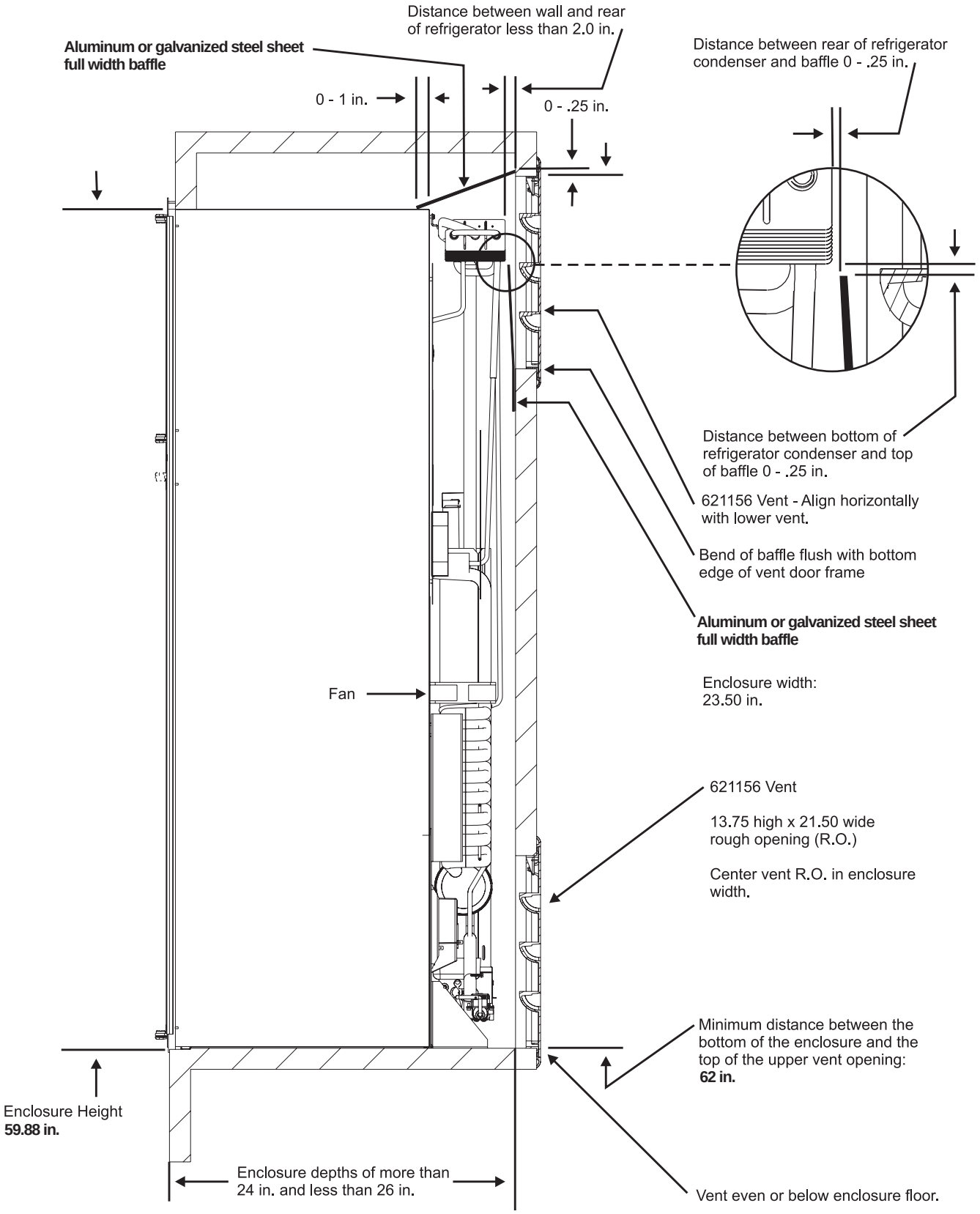

Figure 13. Baffle arrangement for enclosures depths of more than 24 inches and less than 26 inches

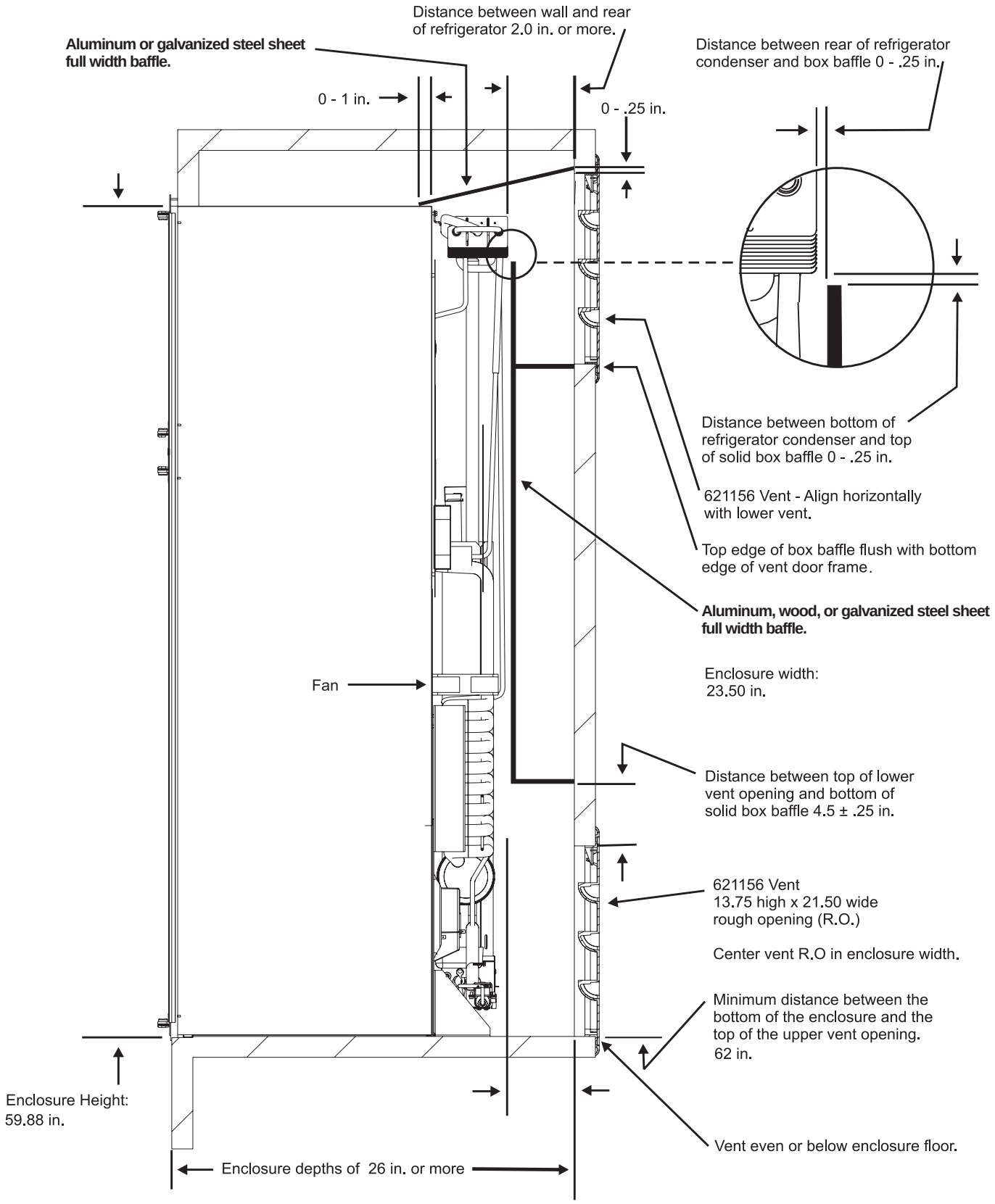

Figure 14. Baffle arrangement for enclosures with depths of 26 inches or greater

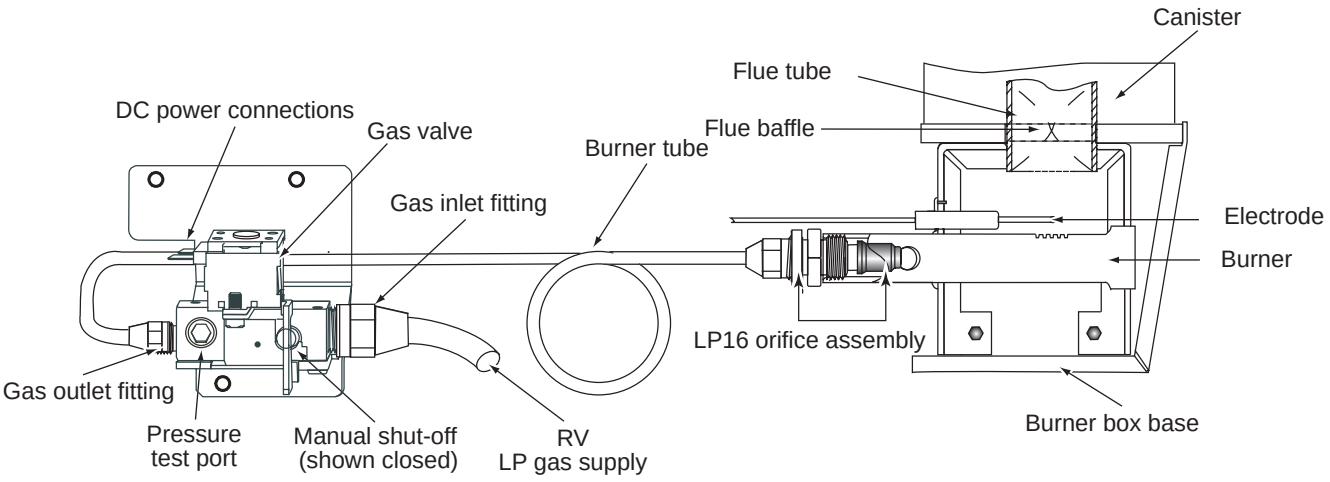

Figure 15. LP gas system components

Pressure Requirements

WARNING:

When working on or near the LP gas system:

- **Do not** smoke or light fires! Extinguish all open flames!
- **Do not** use an open flame to leak test any of the LP gas system components. LP gas is highly flammable and explosive.
- **Do not** connect the refrigerator directly to the LP gas tank. Always use an approved pressure regulator between the LP gas tank and the refrigerator LP gas system.
- To prevent damage to connections, piping, and components, always use two wrenches to tighten or loosen connections. Damaged connections, piping, and components create the potential for gas leaks.

The refrigerator LP gas system, shown in Figure 15, is for propane gas use only. The system working pressure is 10.5 to 11.5 in. water column. Propane gas pressures below 10.5 in. w.c. or above 11.5 in. w.c. will affect heat output which will directly affect cooling efficiency.

Propane gas flow control is monitored electronically by the control's flame sensing circuit. If the flame sensing circuit does not detect a burner flame within 30 seconds after initiating ignition, power to the gas valve is turned off and gas mode operation is locked out.

Testing for LP Gas Leaks

WARNING:

Do not wet or spray liquids on or near electrical connections or electronic components. Many liquids, including leak detection solutions, are electrically conductive and can create an electric shock hazard, short electrical components, and/or damage electronic circuits.

CAUTION:

Do not use leak test solutions that contain ammonia or chlorine. Ammonia and chlorine attack copper and brass components.

Leak testing can be accomplished using an electronic leak detector or a commercial grade leak test solution. The use of homemade soap and water leak test solutions should be avoided if possible. When applying a leak test solution, apply the solution over the entire joint using a small brush or spray applicator.

Due to low system operating pressure, it may take a few minutes for bubbles to appear if the connection is leaking. Hidden joints should be examined thoroughly using an inspection mirror.

Components

> **CAUTION:**
> When working on the refrigerator LP gas system:
>
> - **Do not** alter or modify the burner tube anti-vibration loop.
> - **Do not** cross thread fittings. Exercise extreme care when connecting and disconnecting fittings.
> - Leak test all of the refrigerator propane gas system fittings after service, replacement, or repair.

Solenoid Gas Valve

The electronic controls automatically operate the solenoid gas valve. The solenoid gas valve also has a manual shut-off and capped pressure test port. The valve's manual shut-off is a spring-loaded, quarter turn manually operated valve. See Figure 16.

To manually shut off gas to the burner, pull the handle slightly away from the body of the valve, then turn it one-quarter, turn (90 degrees) counterclockwise.

Solenoid Gas Valve Connections

The solenoid gas valve inlet fitting is 3/8 inch, with male threads; the outlet fitting is 1/4 inch, with male threads.

Orifice

> **WARNING:**
> **Do not** separate cap style LP16 orifice from its adapter. Separating the assembly breaks the seal and will cause LP gas to leak.

The N109X unit is equipped with an LP16 cap style orifice. See Figure 17. The orifice controls the flow of propane gas to the burner. Installing a smaller, larger, or damaged orifice will affect combustion.

Burner

The burner, shown in Figure 17, houses the orifice, provides primary air for combustion, and is the fuel mixing chamber. Primary combustion air flows into the burner through the three primary air intake holes. Blocking any of the three holes will affect combustion. Carbon deposits on the burner slots is the main cause of no cooling or poor cooling performance when the refrigerator operates in the LP gas mode.

Burner Tube

The burner tube is 1/4 inch OD aluminum tubing with an anti-vibration loop. Each end of the tube is a double flare. See Figure 18.

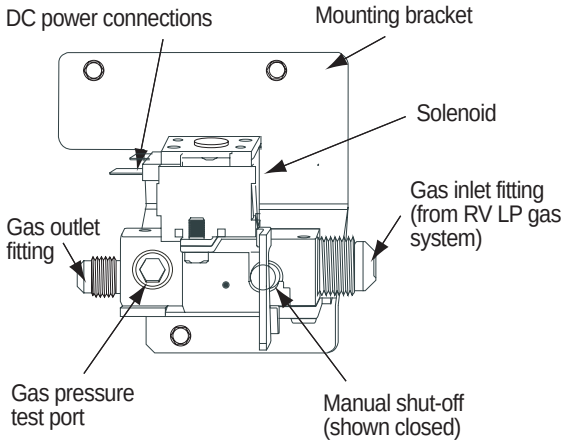

Figure 16. Solenoid gas valve

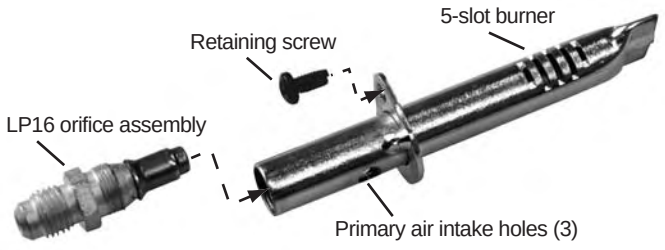

Figure 17. Burner assembly

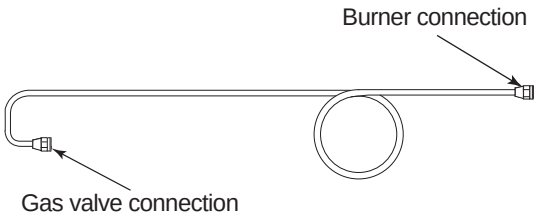

Figure 18. Burner tube

Flue
The flue comes equipped with a removable baffle and a metal heat deflector. The flue on the N109X model ends a few inches above the canister. See Figure 19.

The flue, along with the baffle, should be checked annually. In roof exhaust venting applications, the refrigerator must be removed from the enclosure to check or service the flue or any of its components.

In most sidewall exhaust venting applications, removal of the sidewall exhaust vent provides clear access to service the flue or any of its components.

A one inch diameter, loop-handle, twisted wire brush with a 27 inch wire handle is recommended for sweeping clean the flue.

Heat Deflector
The heat deflector, see Figure 19, deflects hot exhaust gases to the sides. It also keeps dirt and debris from getting into the flue. Cooling performance may be affected if the heat deflector is not installed or is not installed correctly.

Flue Baffle
The flue baffle, see Figure 20, traps and transfers heat to the cooling unit generator.

A retaining wire suspends the flue baffle in the flue, just above the flame. See Figure 20. The flue baffle should be checked annually. In roof vented installations it is necessary to remove the refrigerator from the enclosure to check the flue baffle. To remove the flue baffle from the flue:

1. Remove the heat deflector.
2. Unclip the baffle retaining wire from the rim of the flue.
3. Pull the baffle out of the flue tube.

> ***CAUTION:***
> **Do not cut or modify the flue baffle retaining wire!**
> The wire positions the baffle for optimal heat transfer.

Flame Appearance
The flame should be light blue with sharp blue root cones and a steady burning flame plume. See Figure 21.

A flame that is mostly orange or yellow, is erratic, and/or unstable, indicates a "dirty" burner. Burner cleaning procedures appear on page 25.

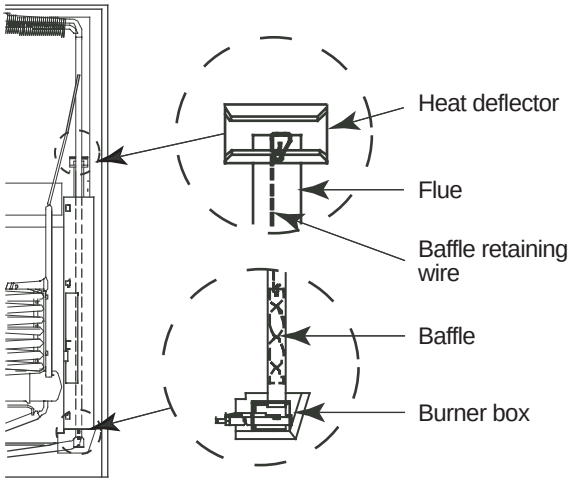

Figure 19. Flue and components

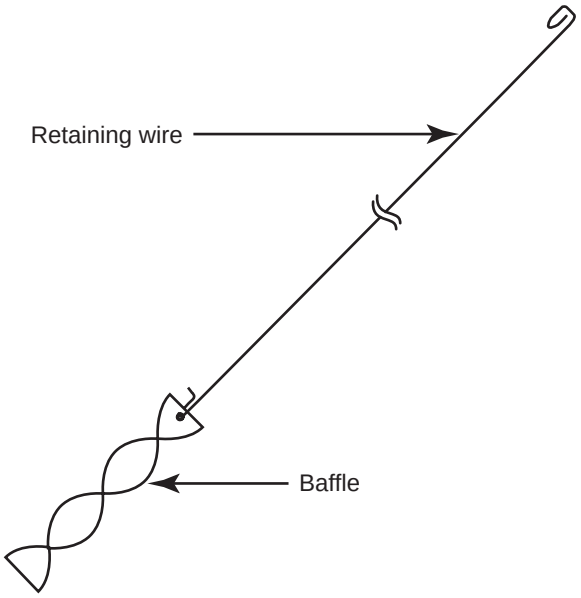

Figure 20. Flue baffle

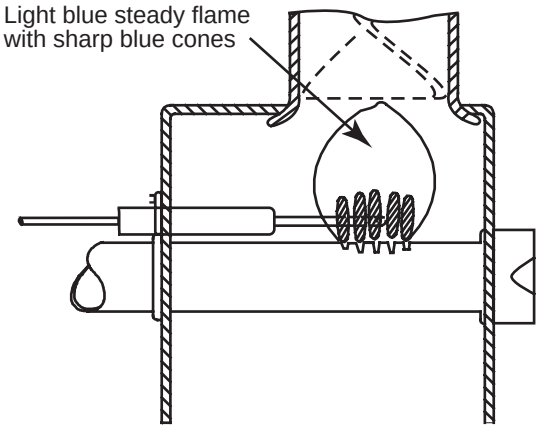

Figure 21. Flame appearance

Burner Cleaning Procedure

> **WARNING:**
> **Burn hazard!** Allow the burner box and burner components to cool before attempting to service the burner assembly or components.

1. Turn OFF power to the refrigerator.
2. Close the LP gas tank valve.

For steps 3 - 5, refer to Figure 22, page 26.

3. Close the combination gas control valve manual shut-off.
4. Remove the drip cup.

> **CAUTION:**
> To prevent damage to connections, piping, and components, always use two wrenches to loosen the burner tube. A damaged burner tube creates a potential for gas leaks.

5. Remove the burner box cover.

For steps 6 - 8, refer to Figure 23, page 26.

6. Disconnect the burner tube from the orifice assembly.
7. Remove the orifice assembly from the burner.
8. Remove the burner retaining screw.
9. Remove the burner from the burner box frame.
10. Clean the burner.

> **NOTE**
> The burner slots may be cleaned with a small flat file. The inner bore of the burner body may be cleaned with a 3/16 in, double-spiral wire brush. Do not damage the threads when cleaning the inner bore of the burner.

> **WARNING:**
> Do not insert any type of cleaning tool or wire into the orifice. Do not drill or ream the orifice opening to clean it. Insertion of any type of cleaning tools, reaming, or drilling through the opening will alter the volume of LP gas flow to the burner and creates a fire hazard potential.

11. Visually inspect the orifice. If dirty, wash the assembly with alcohol, then allow to air dry. If cleaning fails to remove dirt or if the condition of the orifice assembly is questionable, replace the orifice assembly.
12. Clean dirt or debris from the burner box base.
13. Reinstall the burner. Do not overtighten the retaining screw.

> **CAUTION:**
> To avoid gas leaks and prevent damage to connections, piping, and components, always use two wrenches to tighten the burner tube. A damaged burner tube creates a potential for gas leaks.

14. Install the orifice assembly. Thread the orifice assembly into the burner finger tight, then finish tightening using two wrenches.
15. Connect the burner tube. Thread the fitting finger tight, then finish tightening using two wrenches.
16. Install the burner box cover. Do not overtighten the retaining screw.
17. Open the LP gas tank valve.
18. Open the solenoid gas valve manual shut-off.
19. Turn ON the refrigerator and select the LP Manual Mode operation.
20. Leak test LP gas connections during the 30 second trial-for-ignition.

> **WARNING:**
> Do not attempt to repair LP gas leaks with the refrigerator in operation. Before attempting to repair a gas leak:
>
> - Turn OFF the refrigerator.
> - Close the LP gas valve and the solenoid gas valve manual shut-off.

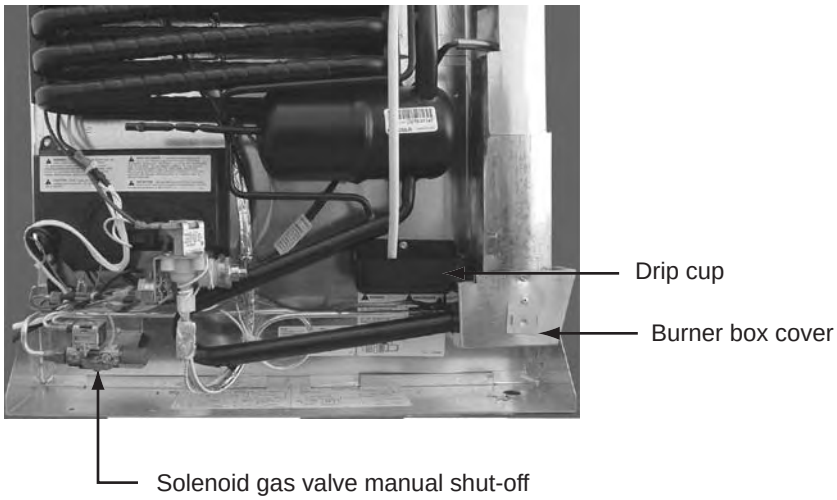

Figure 22. Drip cup and burner box cover

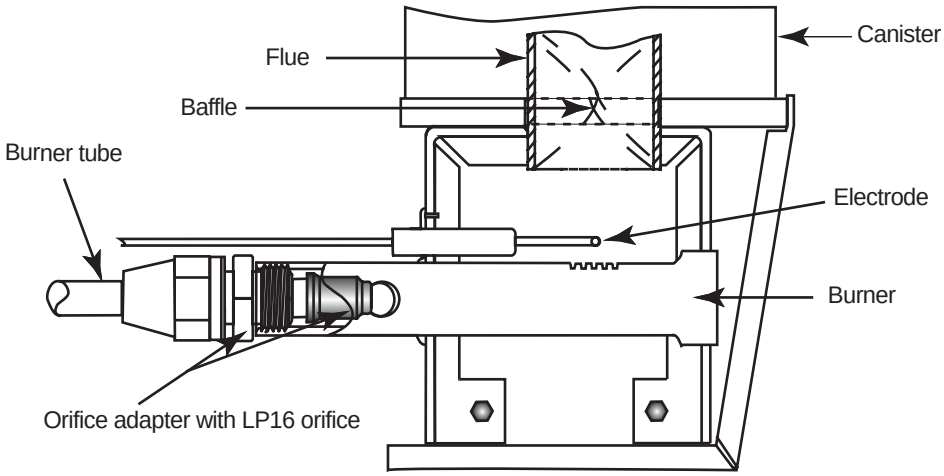

Figure 23. Burner and components

DC Voltage Requirements and Polarity

The operating controls require 10.5 to 15.4 Vdc to operate. The positive wire lead (**+**) connects to power board terminal **12VDC**; the negative wire lead (**–**) connects to terminal **GND1**.

Power Board DC Fuse

> ***WARNING:***
> Never replace a fuse with a higher amp rated fuse. Always use the specified fuse.

The controls circuit fuse is a standard 5 amp (tan color) automotive blade type fuse. It is located on the power board, terminal **F1.**

DC Power Wiring Requirements

> ***WARNING:***
> Never use undersized wires to supply dc power to the power board. The use of undersized wires can cause low voltage and high amp draw conditions. The high amp draw caused by a circuit using undersized wires will cause the wire to overheat and creates an electrical fire hazard.

18 AWG is the minimum AWG size wire that can be used for connecting dc power to 2-way models. The fuse size for overload protection must not exceed 6 amps.

AC/DC Converter as Power Source

The power board must be supplied 12 Vdc only from the filtered output (battery side) of a converter.

Unfiltered voltage (commonly referred to as ac ripple) output of ac/dc converters can cause the electronic controls to set false fault codes. It can also turn off the refrigerator or prevent the refrigerator from turning off.

Lamp Assembly

The operation of the fresh food compartment 12 Vdc lamp is controlled by a magnet activated reed relay switch. The switch is in the optical control circuit board. The magnet is permanently mounted on the underside of the door's top trim piece. If the reed relay switch is suspected of being faulty, see the testing procedure on page 14 of this manual.

Leaving the door ajar or open for more than two minutes causes the controls to display a "dr" fault code. Closing the door turns off the light and clears the "dr" fault from the display. The fault code is stored in the diagnostic mode nonvolatile memory. For "dr" troubleshooting procedures, see page 14. As shown in Figure 24, the light assembly harness and thermistor share the same connector.

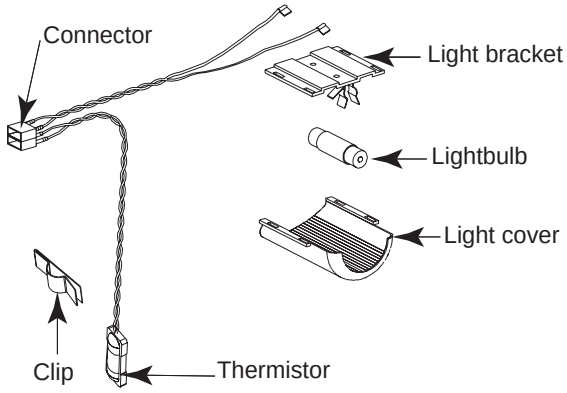

Figure 24. Lamp/thermistor assembly

Divider Heater

The divider heater is permanently "foamed" between the divider separating the freezer and fresh food compartment. The controls constantly monitor power board voltage output to the heater through built in diagnostics (see page 44). Turning the refrigerator on automatically energizes the heater.

AC Power Requirements

> **WARNING:**
> **Electric shock hazard!** The refrigerator receives power from more than one source. Unplug the ac cord from the RV ac receptacle before servicing electrical or electronic components.

AUTO AC and AC-Manual Mode operation require 108 to 132 Vac. AC power must be supplied through a 2 pole/3 wire/20 amp grounding type receptacle.

AC Heater

> **WARNING:**
> **Do not wire the heater direct!** Wiring the heater directly bypasses control safety devices and creates the potential for an electrical fire.

The ac heater, see Figure 25, is a cartridge type heater. The location of ac heater on the back of the refrigerator is shown in Figure 31, page 34. The heater is rated for 300 watts/2.5 amps @ 120 Vac. Heater resistance is 48 Ohms.

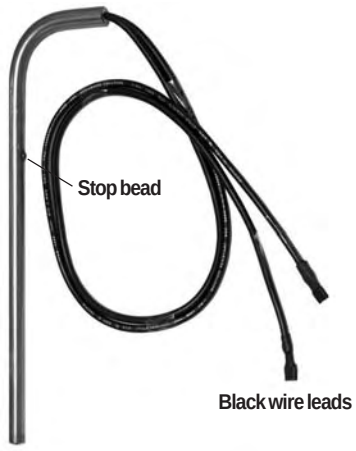

Figure 25. AC heater

When there is poor or no cooling in AUTO AC or AC Manual Mode:

a. Measure ac voltage input to the power board.
b. Measure heater amp draw.
c. If amp draw is not as specified, measure the heater's resistance at ambient temperature.

NOTE

Heater resistance must be measured at ambient temperature.

When replacing the ac heater make sure the stop bead rests fully against heater tube rim. Figure 25 shows the location of the stop bead.

AC Heater Circuit Fuse
The ac circuit fuse is a fast acting 5 amp $^{1}/_{4}$" x $1^{1}/_{4}$" AGC type. It is on the power board, terminal F3.

Power Board AC Power Cord

> **WARNING:**
> **The following warning is present on each ac cord and should be strictly followed:** This appliance is equipped with a three-prong (grounding) plug for your protection against shock hazards and should be plugged into a properly grounded three-prong receptacle. Do not cut or remove the grounding prong from this plug.

The power board is supplied ac power through the black ac power cord. See Figure 26. Do not modify or cut the cord's grounding prong. Always make sure that ground wire (green wire) is tightly fastened to the refrigerator cabinet metal plate. The rounded side of the ac cord's power board connection must be connected to the power board with the rounded side facing left.

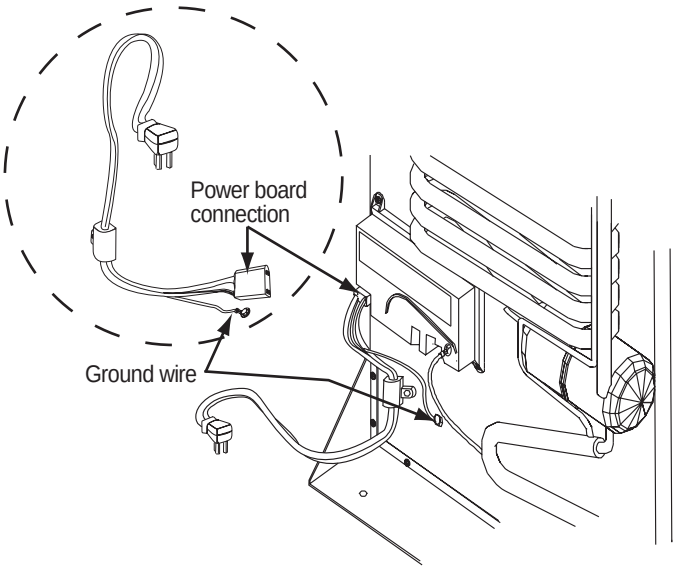

Figure 26. Power board ac power cord

Ice Maker AC Power Cord

The ice maker is supplied ac power through a separate white ac power cord. The cord and its connections to the ice maker wire harness are shown in Figure 27. The ice maker cord can be detached from the power board ac cord by cutting the two plastic cable ties holding them together.

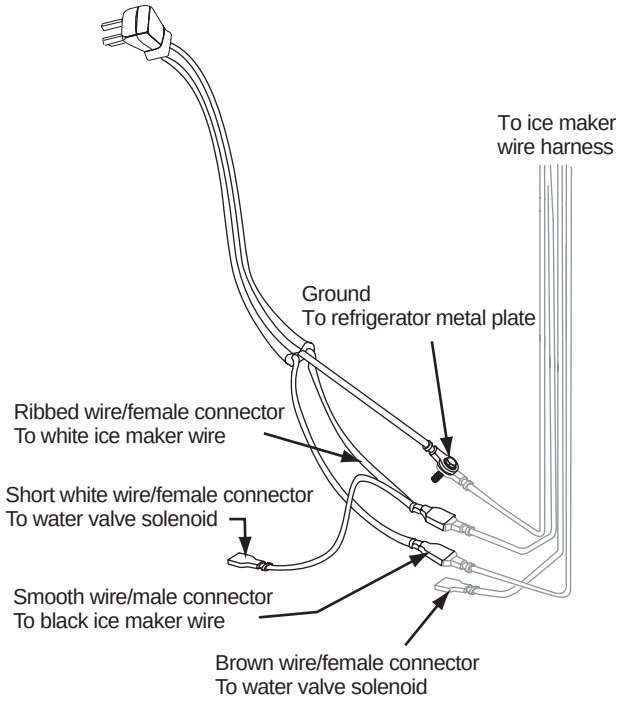

Figure 27. Ice maker power cord

12 Vdc Ventilation Fan

The ventilation fan is located on top of the absorber coils on the back of the refrigerator. It is secured to the absorber coils by a bracket and mounting screws. See Figure 29. The ventilation fan is supplied 12 Vdc through power board connections. Fan operation is automatically controlled by a thermostatic switch. The thermostatic switch is mounted on the first condenser fin. See Figure 28. The switch turns the fan on when the temperature is approximately 130 °F. The switch turns the fan off when fin temperature drops to approximately 115 °F.

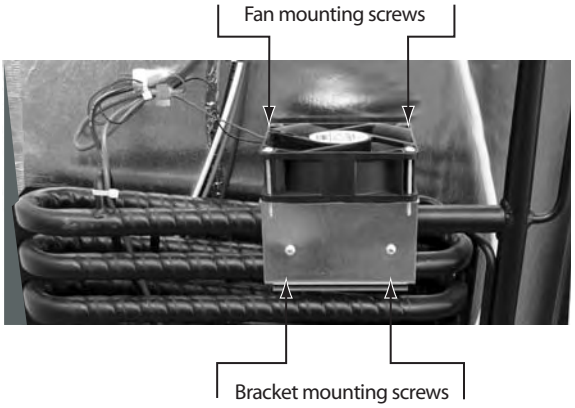

Figure 29. Fan mounted on the top absorber coil

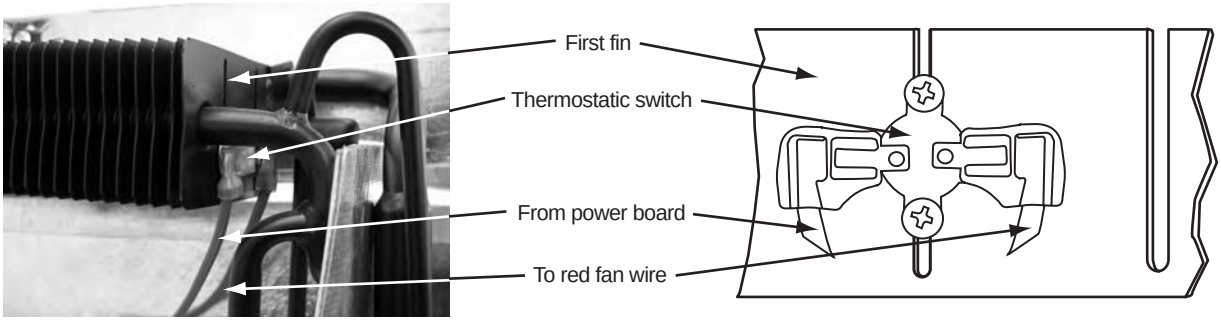

Figure 28. Fan thermostat

Description

The cooling unit is a self-contained gravity flow absorption refrigeration system. The refrigerant charge is a solution of water, ammonia, sodium hydroxide, and sodium chromate (a corrosion inhibitor). Refrigeration is accomplished by applying heat energy and venting the heat extracted from the freezer and fresh food cabinet while maintaining the unit leveled.

Heat Absorption

The refrigerant transfers the heat from the freezer and the food cabinet to the absorber coils. At the absorber coils the metal surface absorbs the heat and air flow over the external surfaces of the coils carries away the heat. A thermal air current is created by the rising hot air and flows out of the enclosure through the roof exhaust vent or sidewall exhaust vent (depending on installation). The flowing air mass passes over the surface of the condenser fins where it absorbs heat transferred from the ammonia vapors flowing through the condenser.

The thermal airflow process creates a "chimney effect." The fresh air drafted by the chimney effect through the intake vent removes rejected heat, supports combustion, and expels the exhaust gases produced by the combustion process. Any obstruction, restriction, or modification to vents or the enclosure will affect the cooling cycle. Poor cooling unit performance may be due to:

- Loose insulation interfering with the ventilation process.
- Construction material or debris left in the enclosure.
- Insect screening covering vents.
- Plastic sheeting covering vents.
- Items stored in the enclosure.
- Modifications to vents or enclosure.
- No roof or sidewall exhaust vent opening.

Information pertaining to ventilation and enclosure requirements appear s on page 17.

Leveled Operation

The circulation of the refrigerant through the cooling unit is accomplished by gravity flow; therefore, the refrigerator must be operated leveled. Off-level operation will effect the flow of the refrigerant through the cooling system. The maximum off-level operation limits are:

- 3 degrees from side-to-side.
- 6 degrees from front-to-back.

Exceeding the maximum off-level limits can permanently damage the cooling unit.

The cooling unit or its performance are not affected when the vehicle is in motion.

Gradual Decrease in Cooling Efficiency

A gradual decrease in cooling efficiency can be caused by the following factors:

- Ventilation obstruction.
- Heat source failure.
- Off-level operation.
- Lack of service or maintenance.
- Inadequate repairs.
- Unauthorized field modifications.
- Cooling unit failure.

Note that a gradual decrease in cooling efficiency is not always an indication of cooling unit failure. If any of these factors exist and are not corrected, a replacement cooling unit will also perform inefficiently or fail.

Step-by-step troubleshooting is the best approach when dealing with a gradual decrease in cooling. It is important to consider that the cooling unit is working, though not efficiently. A Cooling System Diagnostic Flowchart can be found on pages 32 and 33. The cooling unit must reach peak efficiency before troubleshooting can take place. It takes an average of four hours for the refrigerant to reach peak efficiency. This time frame depends on ambient air temperature.

Additionally, ambient air temperature plays a significant role if the unit was not installed correctly. Incorrect installation leads to poor ventilation, which in turn relates to poor cooling performance.

The unit's service and maintenance history should also be considered when checking a cooling unit for poor cooling performance. The service history and the scope of service work performed may lead directly to the cause and resolution of a cooling problem.

Cooling Performance Monitoring Control

The Cooling Unit Monitoring Control monitors the fin assembly temperature through the thermistor. This control is activated when the refrigerator is turned on or if the fin temperature rises above 40° F. When the temperature is above 40° F and a change in cooling is not detected in a specific amount of time, the refrigeration heat sources are turned off. The Cooling Unit Monitoring Control will not activate if:

- The fin assembly temperature stays below 40° F.
- If the thermistor is disconnected, open, or shorted.
- If the fresh food compartment door is sensed open (resampling starts when door closes).
- The ac heater is open.
- AC voltage is low.
- Frost management is active.

Cooling Unit Monitoring Control Operation
The Cooling Unit Monitoring Control operates in the following sequence:

1. Because the fin temperature is above 40° F when the refrigerator is turned ON, sampling begins when the refrigerator is turned ON and stops when the temperature falls below 40° F.
2. The Control activates when the fin temperature rises above 40° F while the refrigerator controls are demanding cooling.
3. The Control samples the fin temperature every ten minutes for a period of two hours.
4. If there is no decrease in temperature in this two-hour time period, the Control turns off the active refrigeration heat source.
5. After ten minutes, the Control restarts the heat source and monitors the fin temperature every ten minutes for another 40 minutes.
6. Within this 40-minute time period the temperature must decrease or the Control will turn off the refrigerator and lock out the heat sources.
7. Once the heat sources have been locked out, the optical control assembly displays the “no co” fault code and an audible alarm sounds.

First "no co" Fault Code
The first time the “no co” fault code appears on the optical control assembly, it can be cleared by the user by turning the refrigerator OFF and then back ON. This gives the user the opportunity to check for problems that may have caused a "no co" code, such as obstructed ventilation. This fault code occurrence is then stored in the controls. If the refrigerator completes a full cooling cycle after the user turns it back on, this fault code occurrence will be cleared from the controls.

NOTE

"No co" fault code occurrences are not stored in the built-in diagnostic stored fault history accessible through the Diagnostic Mode. Instead they are stored in a separate, unaccessible stored fault history.

If the refrigerator does not complete a full cooling cycle after the user turns the refrigerator back on, a power board reset is required. The power board reset must be performed by a service center according to the procedure on page 16.

Vertical Baffle

The vertical baffle (see Figure 30) extends from the top of the flue tube to the condenser. The purpose of this baffle is to direct flue exhaust away from the condenser. This baffle must never be removed.



Figure 30. Vertical baffle

Refrigerant Leakage

WARNING:
Do not operate the refrigerator if the cooling unit is leaking or leakage is suspected.

Yellow powder or liquid deposits at the rear of the refrigerator or ammonia smell inside the refrigerator indicate refrigerant leakage. Exercise extreme care when handling a leaking or a suspected leaking cooling unit. The cooling system refrigerant solution consists of water, ammonia, sodium hydroxide, and sodium chromate.

Disposal of Cooling Unit

WARNING:
Do not, under any circumstances, release any waste or residue directly into sewers or surface waters. If any liquid leaks or spills from the cooling unit, contact the nearest environmental services for guidance.

Dispose of cooling unit according to local, state, and federal guidelines and regulations. Dispose of any liquid waste or residue according to pre-emergency planning and all applicable local, state, and federal regulations.

Cooling System Diagnostic Flowchart

⚠ *WARNING:*

Do not bypass or modify the refrigerator's controls or components to diagnose the cooling system. Do not wire the heater directly. The heater is supplied power through a fused circuit.

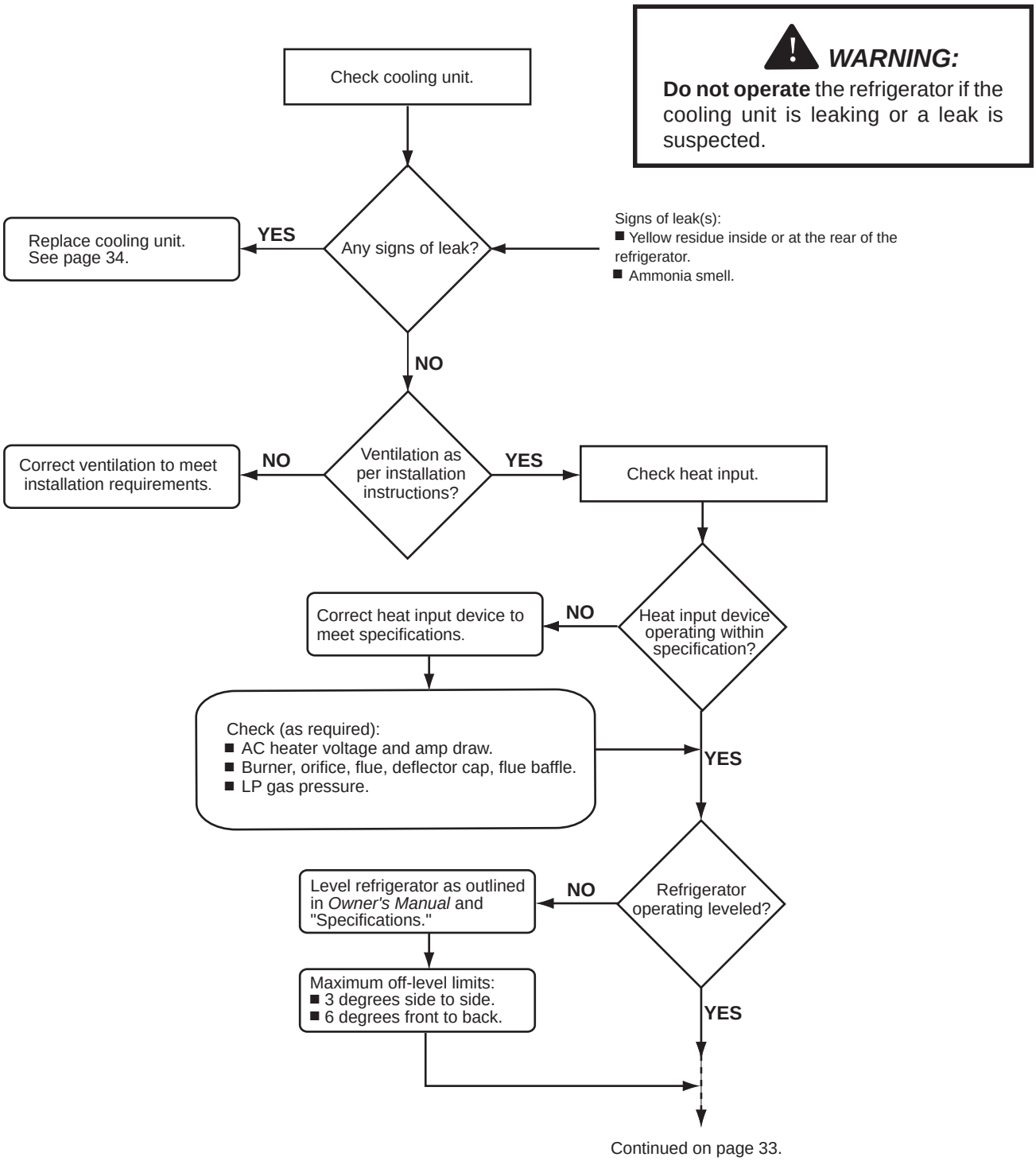

⚠ *WARNING:*

Do not operate the refrigerator if the cooling unit is leaking or a leak is suspected.

Continued on page 33.

⚠ WARNING:

Do not operate the refrigerator if the cooling unit is leaking or a leak is suspected.

From page 32.

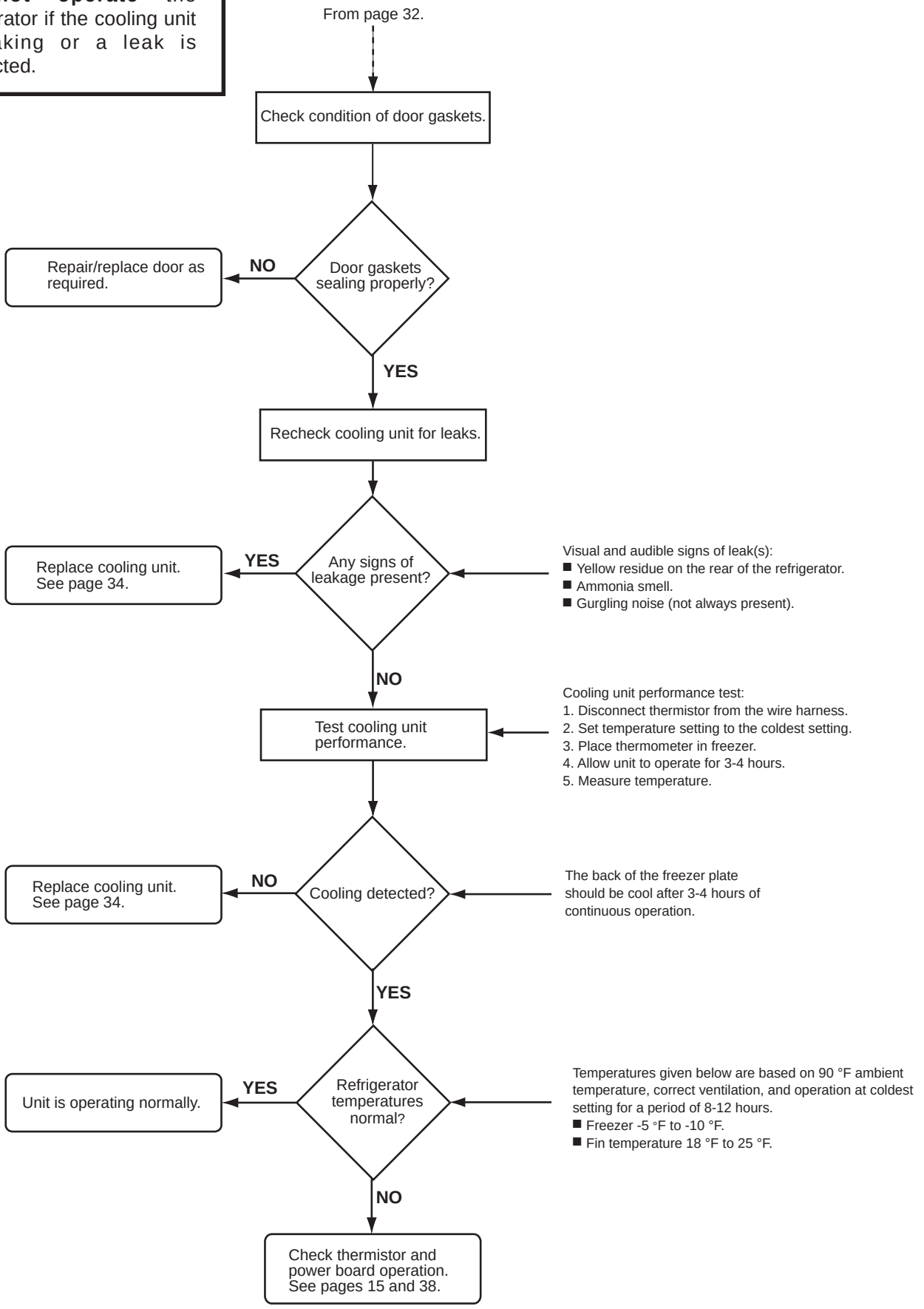

Replacing the Cooling Unit

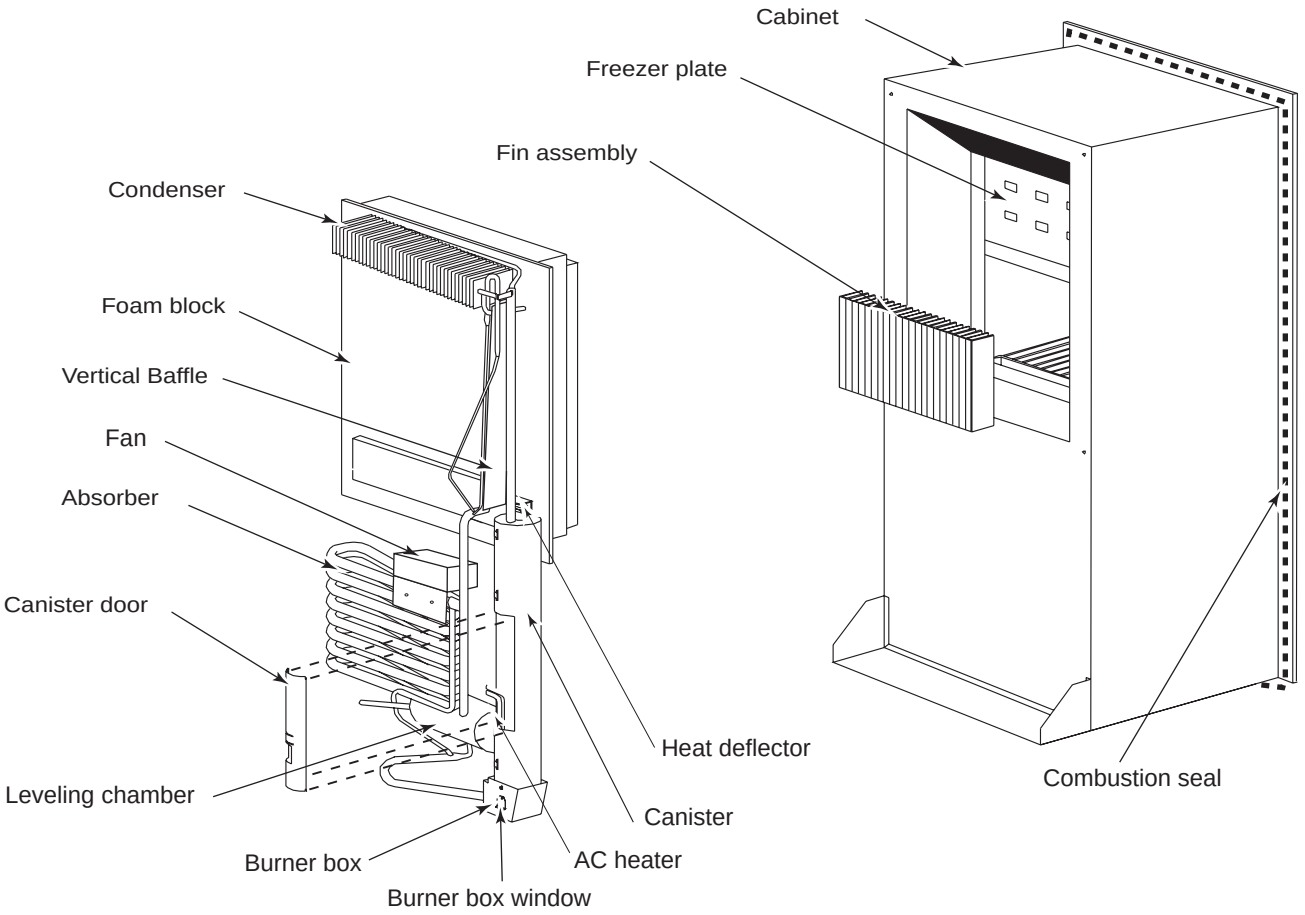

Figure 31. Cooling unit and components

NOTE

This procedure supplements the instructions packaged with N109X model replacement cooling unit. Follow the procedure thoroughly to install the cooling unit correctly. Incorrect installation, adjustments, or modifications will affect cooling performance.

Removing the Refrigerator and Cooling Unit

Refer to Figure 31 to locate components.

1. Close the LP gas tank valve(s).
2. Disconnect the ac power cord from the RV receptacle.
3. Turn OFF RV dc power to the refrigerator.
4. Disconnect the dc power supply wires from the power board.
5. Disconnect the RV LP gas supply line from the gas valve.

N109XIM (ice maker)

a. Disconnect the ice maker ac power cord from the RV outlet.

b. Close the water supply valve to the ice maker.

c. Disconnect the RV water supply line from the ice maker water valve.

6. Remove the bottom trim piece by pulling the trim piece away from the refrigerator.
7. Remove the two retaining screws from the bottom of the cabinet. See Figure 34, page 37.
10. Remove the top trim piece by pulling the trim piece away from the refrigerator.
11. Remove the two retaining screws from the top of the cabinet. See Figure 35, page 37.

Removing the Refrigerator and Cooling Unit (cont.)

N109XIM (ice maker)

a. Disconnect the ice maker water line from the water fill tube.

b. Disconnect the ice maker wire harness wires (white and brown wires) from the water valve solenoid.

c. Disconnect the ice maker wire harness ground wire.

d. Remove the two water valve mounting screws and plastic spacers, then remove the water valve.

1. Remove the fan, bracket assembly, thermostat, and wiring from the cooling unit.
2. Remove the drip cup retaining screw, then remove the cup.
3. Remove the burner box cover retaining screw, then remove the cover.
4. Disconnect the burner tube from the gas valve.
5. Remove the burner retaining screw, then pull out the burner tube along with the burner.
6. Disconnect the gas valve wires from the power board.
7. Remove the gas valve bracket screws (3), then remove the gas valve assembly.
8. Remove the spark/sense electrode assembly retaining screw and remove the spark/sense electrode assembly from the burner box.
9. Remove the rear angle brace screws (up to four screws), if present.
10. Pull the refrigerator out of the enclosure.
11. Remove the burner box retaining screws (2), then remove the burner box.
12. Disconnect the ac power cord from the power board.
13. Remove the power board cover retaining screws (3), then remove the cover.
14. Disconnect the ac heater wires from power board terminals AC_HT -LO1 and AC_HT_HI.
15. Detach the thermistor from the 10th fin.
16. Remove the freezer plate retaining screws (eight retaining screws and washers). It may be necessary to remove the ice bin to do so.
17. Remove the four retaining screws from the fin assembly.
18. Cut the tape that seals the four edges of the foam plug.
19. Remove the two absorber bracket retaining screws.
20. Remove the condenser retaining screw. See Figure 32, page 36.
21. Separate the cooling unit from the refrigerator cabinet. To separate:
    a. Grab the cooling unit by the liquid heat exchanger.
    b. Pull cooling unit upward at a slight angle to unseat the foam plug.
22. Remove the cooling unit from the cabinet.

Installation of Replacement Cooling Unit

NOTE

The sealant must be applied correctly to prevent air from being drawn into the cooling unit's high and low evaporators.

1. Clean the old sealant from the back of the evaporator plate, fin assembly, cooling unit, and cabinet step.

! *CAUTION:*

Use only the NORCOLD approved sealant that is packaged with the new cooling unit. Do not use silicon, latex, or other sealant, which may cause damage to the foam and will greatly reduce cooling efficiency.

2. Apply a 1/2 inch bead of sealant to the cooling unit's low and high temperature evaporators, and to the foam plug step. See Figure 33, page 36.
3. Mate the cooling unit foam plug section to the cabinet step opening. *The foam plug must seat evenly against the cabinet step.*
4. Install the condenser retaining screw. *Do not overtighten the condenser retaining screw*.
5. Install the freezer plate screws to the cooling unit (eight screws with washers). *Do not overtighten the freezer plate screws.*
6. Install the fin assembly retaining screws to the cooling unit (four screws). *Do not overtighten fin screws.*
7. Attach the thermistor to the 10th fin (counting from right to left).
8. Fasten the absorber brackets of the cooling unit to the cabinet (two screws). *Do not overtighten retaining screws.*
9. Tape all four edges of the foam plug to the cabinet using HVAC metallic tape or heavy duty duct tape.
10. Reinstall the fan bracket, fan, thermostat, and wiring. See wiring diagram on the outer surface of the fan bracket or refer to Figures 42 and 43, pages 45 and 46.

N109XIM (ice maker)

a. Reinstall the ice maker water valve.

b. Reconnect the ice maker water line.

c. Connect the brown and the white wires to the water valve solenoid terminals.

11. Install the burner box.
12. Install the burner tube and burner assembly. Do not overtighten fittings.
13. Install the gas valve and connect the burner tube to the valve. Do not overtighten fittings.
14. Install the spark/sense electrode assembly. Set electrode-to-burner air gap 1/8 to 3/16 inch.
15. Install the burner box cover.
16. Connect the ac heater wires to power board terminals AC_HT -LO1 and AC _HT _HI.
17. Reinstall the power board cover.
18. Connect the gas valve wires to the power board terminals GV and GV_GND.
19. Plug the ac cord into the power board.
20. Connect the spark/sense electrode assembly to the power board.

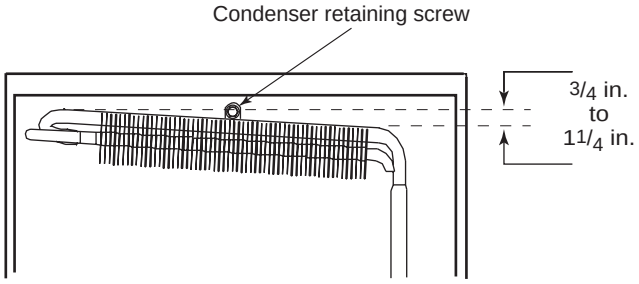

Figure 32. Condenser angle and retaining screw

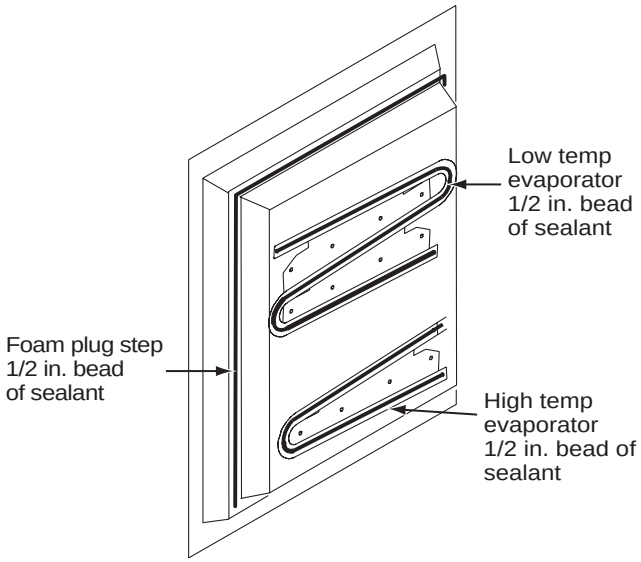

Figure 33. Application of sealant

Reinstallation of Refrigerator into Enclosure

> ***WARNING***
>
> Do not install the refrigerator if the combustion seal has been damaged. A damaged combustion seal must be replaced. The seal isolates the living area of the vehicle from exhaust gases generated by LP gas combustion. LP gas exhaust gases contain carbon monoxide, which is an odorless, colorless gas that can cause dizziness, nausea, or in extreme concentrations, death.

1. Check the condition of the combustion seal. Replace seal if damaged. Do not install the refrigerator if the combustion seal is damaged.
2. Place the refrigerator in the enclosure. The combustion seal must seat fully against the enclosure wall.
3. Install the two retaining screws in the bottom of the cabinet. See Figure 34.
4. Reinstall the bottom trim piece by aligning the clips and grooves and rolling the piece down until it snaps into place.
5. Install the two retaining screws in the top of the cabinet. See Figure 35.
6. Reinstall the top trim piece by aligning the clips and grooves and rolling the piece up until it snaps into place.
7. Secure the back of the cabinet to the enclosure floor with the rear angle bracket screws.

N109XIM (ice maker)

a. Connect the water supply line to the ice maker water valve.

b. Open the water supply to the ice maker.

c. Check for water leaks.

8. Connect the RV LP gas supply line to the gas valve inlet fitting.
9. Open the solenoid gas valve manual shut-off.
10. Plug the refrigerator ac power cord into the RV receptacle.
11. Connect the RV dc power supply wires to power board terminals 12VDC and 12V_GND1.
12. Open the LP gas tank valve(s), then leak test LP gas connection at solenoid gas valve.
13. Leak test the burner solenoid gas valve and orifice assembly burner tube connections.

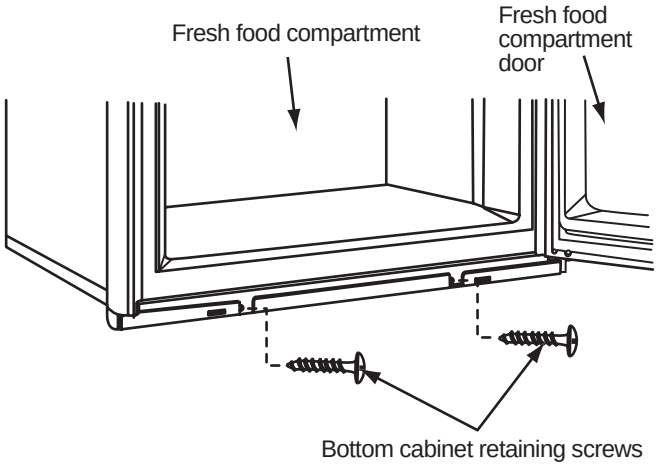

Figure 34. Bottom cabinet retaining screws

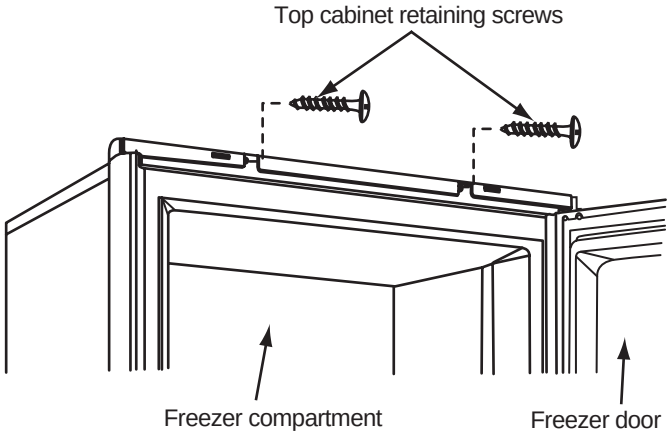

Figure 35. Top cabinet retaining screws

Description

Inputs, outputs, monitoring, and diagnostic functions are managed and controlled by the power board. Inputs, outputs, monitoring information, and diagnostic functions are communicated through the optical control assembly. The wire harness interfacing the power board with the optical control assembly is "foamed" into the cabinet. Wiring pictorials and schematics can be found on pages 45, 46, and 47.

NOTE

Because the wire harness is "foamed" into the cabinet, it is not a replaceable component. This wire harness is not connected to the ice maker wire harness described on page 48.

Power Board

The power board is located on the back of the refrigerator below the absorber coils. It is seated on an insulated base to prevent the printed circuit from making contact with the refrigerator's cabinet metal plate. The power board seated in its base is shown in Figure 36.

Two self-tapping 1/4 inch hex head screws hold the power board and base in place. The power board cover is held by three self-tapping 1/4 inch hex head screws.

Removal–Power Board

1. Turn OFF the refrigerator.
2. Turn OFF the RV dc power to the refrigerator.
3. Disconnect dc power supply wires from power board terminals 12 VDC and 12_VGND1.
4. Unplug the ac power cord from the RV ac receptacle.
5. Disconnect the ac cord from the power board.
6. Disconnect the gas valve wires from power board terminals GV and GV_GND.
7. Disconnect the spark sense electrode wire.

N109XIM (ice maker)

- Loosen the water valve bracket, then move the bracket/water valve assembly out of the way.

8. Remove the three 1/4 inch self-tapping hex head screws from the power board cover.
9. Remove the power board cover.
10. Disconnect the ac heater wires from power board terminals AC_HI and AC_LO.
11. Disconnect the wire harness connector from power board, terminal P1.
12. Remove the two 1/4” hex head screws attaching the board to the base, then remove the power board along with its base.

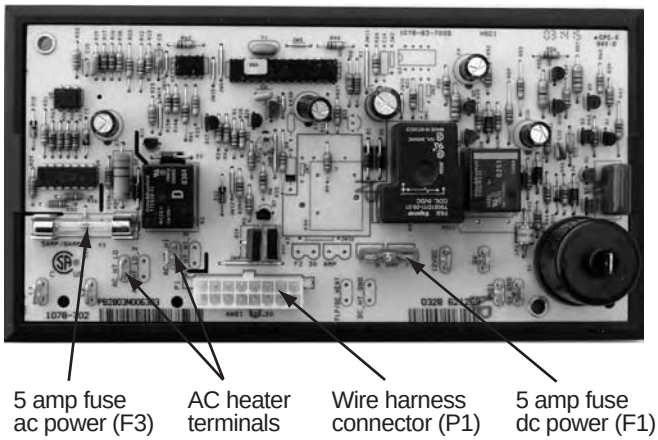

Figure 36. N109X power board

Installation–Power Board

1. Seat the power board in the base.
2. Attach the power board and base assembly to the refrigerator using two, 1/4 in. self-tapping hex head screws. *Do not overtighten screws.*
3. Connect the wire harness connector to the power board, terminal P1.
4. Connect the ac heater wires to terminals AC_HI and AC_LO.
5. Position and align the power board cover over the power board. Attach the cover using three, 1/4 in. self-tapping hex head screws. *Do not overtighten screws.*
6. Connect the solenoid gas valve wires to terminals GV and GV_GND.
7. Connect the spark/sense electrode wire to the power board high tension terminal.
8. Connect the ac power cord to the power board.
9. Plug ac power cord into the RV ac receptacle.
10. Connect positive and the negative dc power wire leads to the power board.

- Positive wire (**+**) to terminal 12VDC.
- Negative wire (**–**) to terminal 12_VGND1.

N109XIM (ice maker)

- Reinstall the water valve and bracket assembly.

11. Turn ON the RV dc power to the refrigerator.
12. Turn ON refrigerator, then check all power board control functions before placing in service.

TEMP SET Switch
- Press momentarily to view temperature setting.
- Press and hold to select a temperature setting.
- Settings: 1= cold/9= coldest.

Power Switch
- Press momentarily to turn ON refrigerator.
- Press and release after three seconds to turn OFF refrigerator.

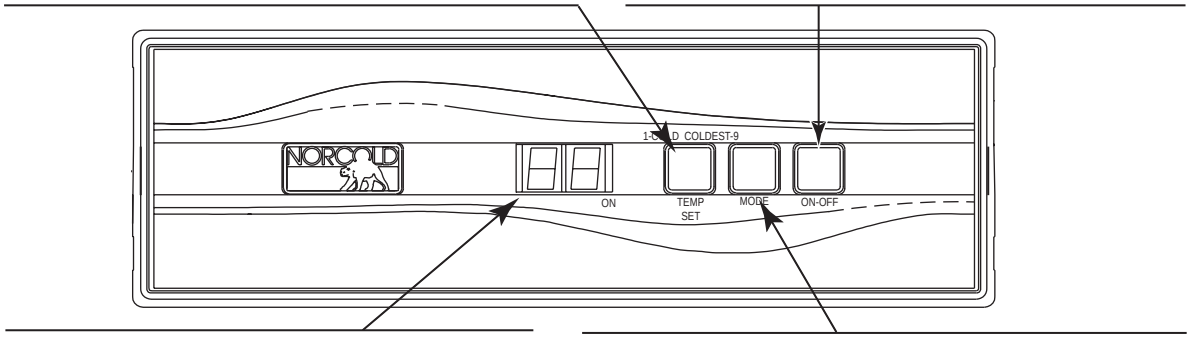

Two 7-Segmet LED Display
- Shows operation mode AUTO, AC, and LP.
- Shows fault codes and diagnostic information.
- Shows temperature setting.

MODE Switch
- Press momentarily to display operating mode.
- Press and hold to select AUTO, AC or LP Manual Mode.
- Release when desired mode displays.

Figure 37. N109X optical control assembly

N109X Optical Control Assembly

The optical control assembly, located on the front of the refrigerator, communicates with the power board through a "foamed in" wire harness (this wire harness is not connected to the ice maker wire harness). Drilling or puncturing the refrigerator rear panels may cause damage to the wire harness. Controls and related features are shown in Figure 37. The optical control assembly with the front box on the right is shown in Figure 38. The optical control assembly connected to the wire harness is shown in Figure 39.

Front Box

Two tabs lock the front box to the optical control assembly. A retaining screw on the hinge side retains the front box to the divider. Shifting the refrigerator door swing requires shifting the front box to the selected hinge side.

Removal and Installation of Optical Control Assembly

To remove the optical control assembly:

1. Turn the refrigerator OFF.
2. Remove the front box retaining screw, then remove the front box.
3. Remove the optical control assembly retaining screws.
4. Disconnect the optical control assembly from the wire harness.

To install the optical control assembly:

1. Connect the optical control assembly to the wire harness.
2. Install the optical control assembly on the divider. *Do not overtighten the retaining screw.*
3. Reinstall the front box. *Do not overtighten the retaining screw.*
4. Turn on the refrigerator, then check all of the optical control assembly functions.

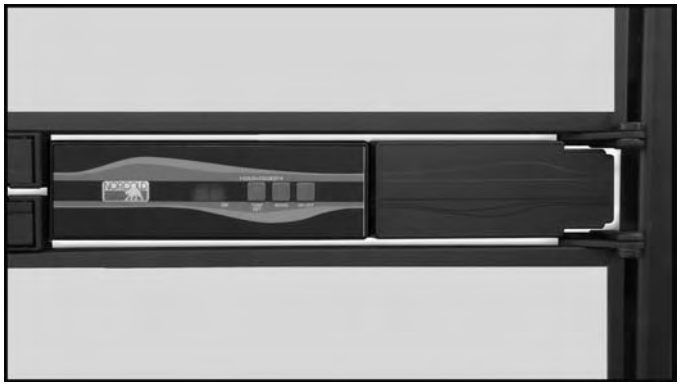

Figure 38. N109X optical control assembly with front box

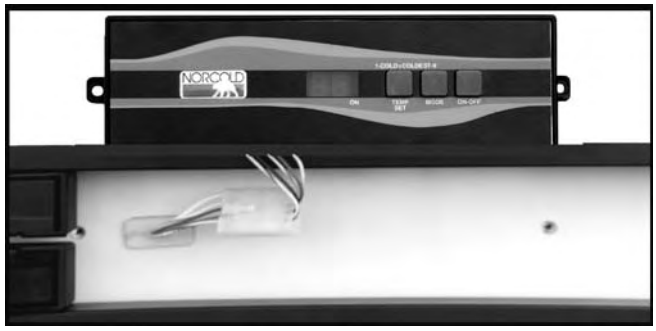

Figure 39. Wire harness connection

Modes of Operation

AUTO

In AUTO mode, ac power is the first heat energy source selected by the controls. If ac power is not present, the controls shift to LP gas (propane), the second priority heat energy source.

AUTO AC Operation

When the AUTO mode is selected, the controls:

1. Display AUTO ("AU") mode operation indicator.



2. Flash "AU" and "AC" as the search for AC power begins.



3. Turn off "AU" and "AC" when ac power is detected and display the "ON" LED. See NOTE 1.



NOTE 1

In AUTO mode, pressing the MODE pushbutton momentarily displays the heat energy source in use. For example, in AUTO AC, the display flashes **AU** and **AC** alternatively for approximately 10 seconds.

AUTO LP Operation

The controls shift to AUTO LP mode any time ac power is not available. The controls shift to AUTO LP as follows:

1. The AUTO mode operation indicator ("AU") displays.



2. "AU" and "AC" indicator alternate flashing on the display while the controls search for ac power.

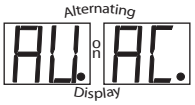

3. When ac power is not present, the controls shift to AUTO LP mode. "AU" and "LP" flash alternatively on the display as the controls start a 30 seconds trial-for-ignition.

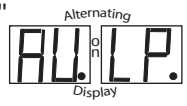

4. Once the controls sense the flame, they turn off the "AU" and "LP", and display the ON LED. See NOTE 1.



Shift from AUTO LP GAS to AUTO AC

In AUTO mode, the controls shift automatically from AUTO LP GAS to AUTO AC any time the controls sense that ac power is available.

No AC Power and No Flame

When ac power is not present and a flame is not sensed, at the end of the 30 seconds trial-for-ignition, the controls:

1. Shut off power to the solenoid gas valve.
2. Set "gas lock-out." See NOTE 2.
3. Sound the alarm (an intermittent beeping tone).
4. Provide a visual warning by flashing alternating "no AC" and "no FL" (no flame) fault codes shown below).

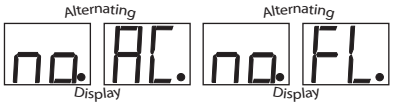

5. Record and store the "no AC" and "no FL" faults in diagnostics nonvolatile memory fault history.

NOTE 2

AUTO LP mode remains in "gas lock-out" until a full cooling cycle on AUTO AC is completed. "Gas lock-out" can also be cleared by turning the refrigerator OFF then back ON.

Troubleshooting No Flame and No AC Faults

Use the following references to identify, troubleshoot, and correct an ignition failure and/or "no AC" faults.

- Page 8, "no FL" fault codes troubleshooting flowchart.
- Page 11, "no AC" fault codes troubleshooting flowchart.
- Page 42, Diagnostic Mode–N109X Models, Screen 4.

AC Manual Mode

In the AC Manual mode, ac power is the only heat energy source selected by the controls. When AC Manual Mode is selected:

1. The AC mode indicator ("AC") displays as the controls start the search for AC power.



2. When AC power is detected, the AC indicator turns off. The "ON" LED displays. See NOTE 3.



NOTE 3

Pressing the MODE pushbutton displays the "AC" mode indicator.

No AC Power or Loss of AC Power

If the controls do not sense the presence of ac power or when ac power is lost in AC Manual mode, the controls:

1. Display the "no AC" fault code.

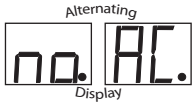

2. Sound the audible alarm. The alarm is an intermittent beeping tone. Pressing the MODE pushbutton silences the alarm.

3. Record and store the "no AC" fault in diagnostics nonvolatile memory fault history.

AC Power Restored

When ac power is restored, the controls:

1. Automatically restore AC Manual Mode operation; however, the recorded fault history will not be erased from memory.

2. Silence the alarm and clear then "no AC" fault code from the display.

Troubleshooting "no AC" Fault

Use the following references to identify, troubleshoot, and correct a no AC fault.

- Page 11, "no AC" fault codes troubleshooting flowchart.
- Page 42, Diagnostic Mode – N109X Model, Screen 4.

LP Manual Mode

In the LP Manual Mode, LP gas is the only heat energy source selected by the controls. When the controls shift to LPManual mode:

1. The LP mode indicator ("LP") displays and the controls start a 30 second trial-for-ignition.



2. The LP mode indicator turns off when the controls sense a flame. The "ON" LED displays. See NOTE 4.



NOTE 4

Pressing the MODE pushbutton displays the "LP" mode indicator.

Flame Fails to Ignite or Flame Goes Out

If the controls do not sense a flame within the 30 second trial-for-ignition or the flame goes out, the controls:

1. Shut off power to the solenoid gas valve.

2. Set "gas lock-out." See NOTE 5 below.

3. Display a flashing visual warning, "no FL" (shown below).

4. Sound an audible alarm. The alarm is an intermittent beeping tone. Pressing the MODE pushbutton silences the alarm.

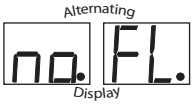

NOTE 5

AUTO LP mode remains in "gas lock-out" until a full cooling cycle on AUTO AC is completed. "Gas lock-out" can also be cleared by turning the refrigerator OFF then back ON.

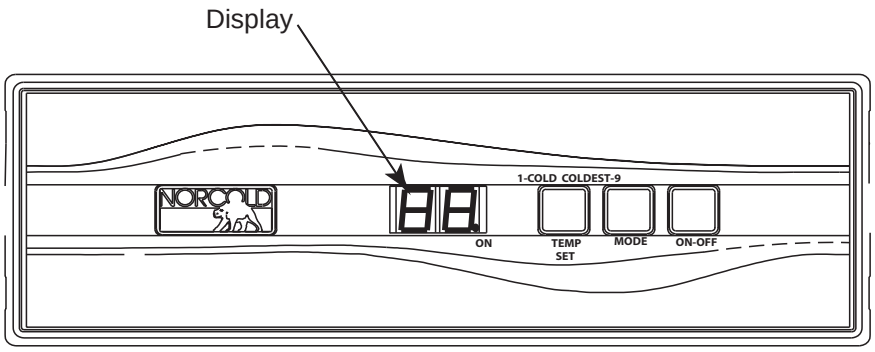

Figure 40. Model N109X optical control assembly

Diagnostic Mode

The Diagnostic Mode uses ten diagnostic channels, commonly known as "screens," to display "live" inputs, outputs, and fault history. Each screen is numbered. The screen number is always displayed on the left side of the optical control assembly display. See Figures 40 and 41.

The N109X optical control display uses a dual 7-segment LED module to display the screen number and diagnostic information. Information displayed is made up of four letters or digits that flash in an alternating sequence. Fault history, "live" inputs, and outputs are presented using LED segments. The diagnostic LED segments, if present, display to the right of the screen number. For diagnostic LED segments identification numbers, see Figure 41.

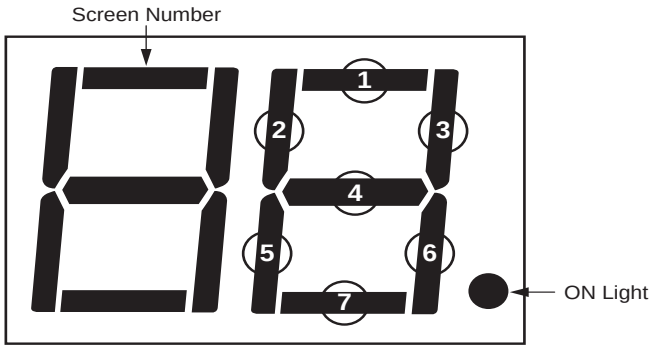

Figure 41. Diagnostic LEDs segments identification.

Accessing the Diagnostic Mode
To access the Diagnostic Mode:

1. **Press** and **hold both** the MODE and TEMP SET buttons **at the same time.**
2. **Release** the MODE and TEMP SET buttons as soon as screen 1. displays.
3. A few seconds later, 88 displays.

Changing Screens
To change screens, **press** and **hold** the MODE button until the next screen displays.

Exiting the Diagnostic Mode
To exit the Diagnostic Mode:

1. **Press** and **hold** the MODE and TEMP SET buttons **at the same time.**
2. **Release** the MODE and TEMP SET buttons as soon as the display shows .

Turning the refrigerator OFF then back ON also exits the Diagnostic Mode.

Screen 1 Diagnostic Mode Active

Screen 1 confirms that the Diagnostic Mode is active. A few seconds after the screen number appears, all LED segments light. See illustration.

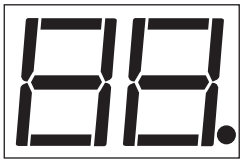

If the screen segments do not match the ones shown in the illustration, the fault is in the optical control assembly. Replacing the optical control should resolve the fault. See page 39.

Press the MODE button to bring up screen 2.

Screen 2 LED Segments Reliability Check

Screen 2 diagnostics continue to confirm the reliability of the display. After a few seconds only the ON light displays. All other LED segments should be off. See illustration.

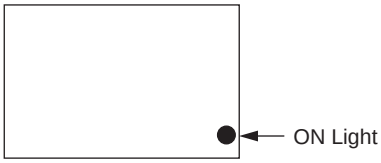

The ON light should be the only LED displayed. If any other LED displays, the fault is in the optical control assembly. Replacing the optical control should resolve the fault. See page 39.

Press the MODE button to bring up screen 3.

Screen 3 Thermistor Fin Temperature

Screen 3 displays the actual fin temperature being sensed by the thermistor. **This is not the fresh food cabinet air temperature.** The illustration shows 32°F fin temperature as displayed in screen 3.

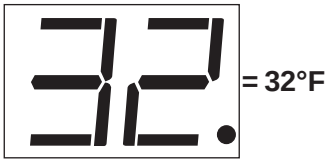

Press the MODE button to bring up screen 4.

Screen 4 Stored Fault History

Screen 4 displays stored fault history using lighted LED segments. The illustration provides fault history information with assigned LED segments . **If a fault occurred, its assigned fault history LED will be on**.

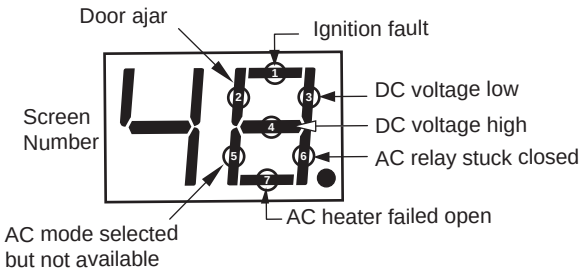

Press the MODE button to bring up screen 5.

Screen 5 Stored Fault History

Screen 5 also displays stored fault history using lighted LED segments. The illustration provides fault history information with assigned LED segments . **If a fault occurred, its assigned fault history LED will be on**.

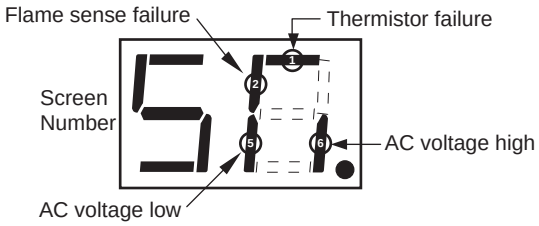

Press the MODE button to bring up screen 6.

Screen 6 Erase Fault History

Screen 6 provides a way to erase fault history from memory. To erase fault history:

1. Press and hold the TEMP SET button when Er shows on the screen.
2. Release the button when CL shows on the screen.
3. Wait five seconds.
4. Press and hold the TEMP SET button until Er shows on the screen.

Press the MODE button to bring up screen 7.

Screen 7 Power Board Inputs

Screen 7 displays "live" power board inputs using lighted LED segments. The illustration below provides "live" inputs information and assigned LED segments. **If a power board input is active or "live," its assigned input LED will be on.**

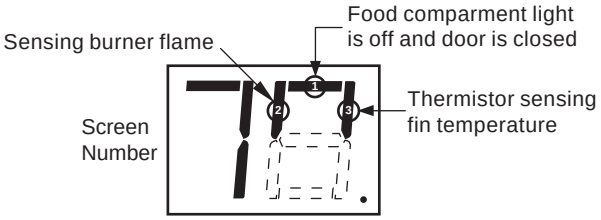

Press the MODE button to bring up screen 8.

Screen 8 Power Board Outputs

Screen 8 displays "live" power board outputs using lighted LED segments. The illustration below provides "live" outputs information and assigned LED segments. **If a power board output is active or "live," its assigned output LED will be on.**

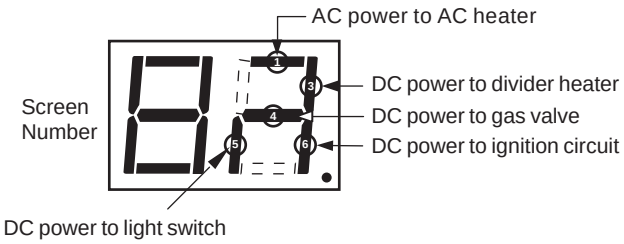

Press the MODE button to bring up screen 9.

Screen 9 Power Board DC Voltage Status

Screen 9 displays dc voltage status using lighted LED segments. The illustration below provides dc voltage status information and assigned LED segments. **If dc voltage at the power board is within normal range (10.5 to 15.4 Vdc), LED segment 4 will be on**.

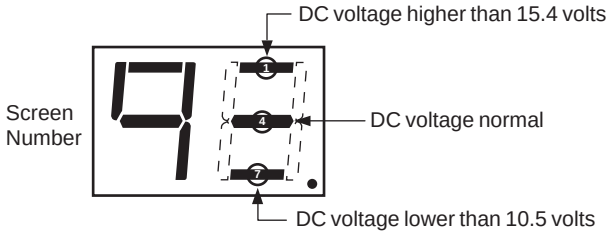

Press the MODE button to bring up screen 0.

Screen 0 Power Board AC Voltage Status

Screen 0 displays ac voltage status using lighted LED segments. The illustration below provides ac voltage status information and assigned LED segments. **If ac voltage at the power board is within normal range (108 to 132 Vac), LED segment 4 will be on**.

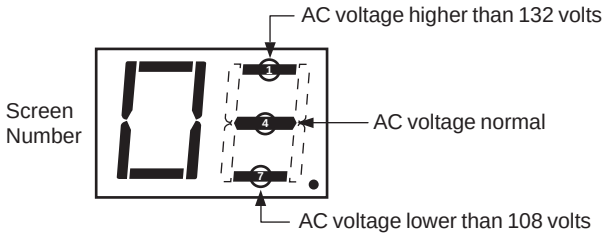

Press the MODE button to return to screen 1.

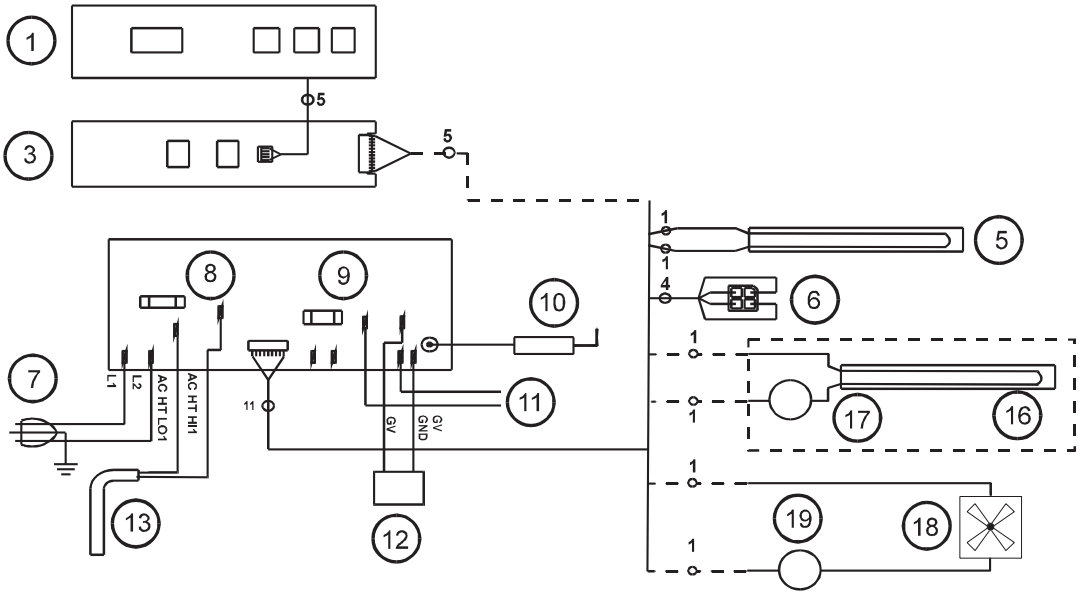

Figure 42. N109X wiring pictorial

1. Display overlay
3. Display board
5. Divider heater
6. Thermistor / light assembly
7. 120 Vac power cord
8. 5 amp fuse
9. 5 amp fuse
10. Spark electrode
11. 12 Vdc connection
12. Gas valve
13. AC heater
16. Water line heater (ice maker models)
17. Thermostat (ice maker models)
18. Fan
19. Fan thermostat

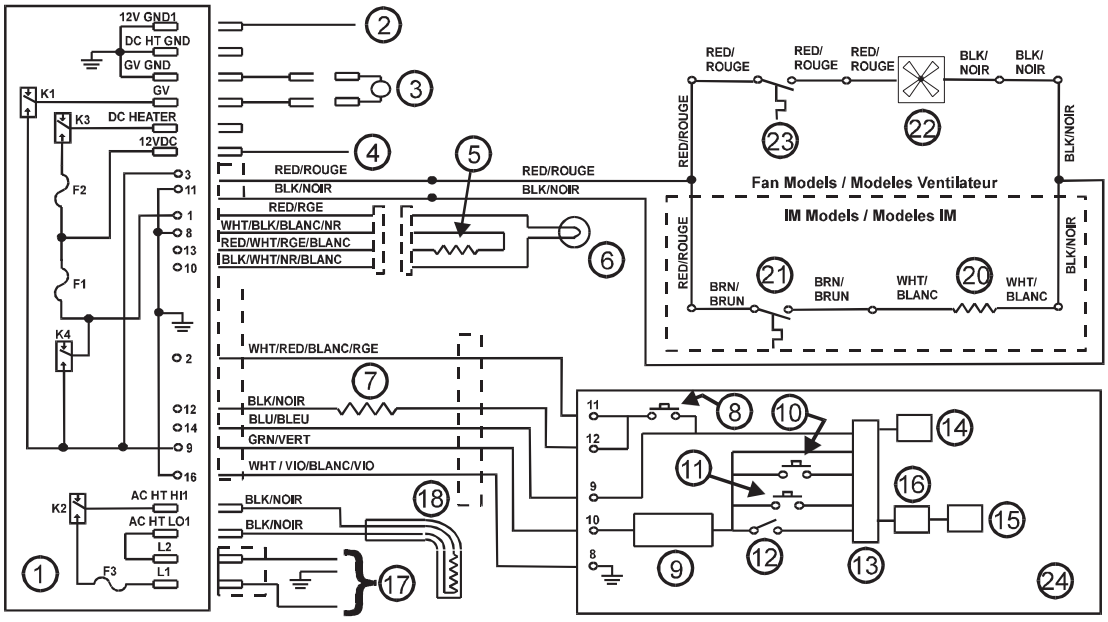

Figure 43. N109X wiring diagram

1. Power board
2. 12 Vdc
3. Gas solenoid valve
4. +12 Vdc
5. Thermistor
6. Interior light
7. Divider heater
8. ON / OFF switch
9. Voltage regulator
10. MODE switch
11. TEMP SET switch
12. Door switch
13. Microprocessor
14. Alarm
15. LED
16. LED
17. 120 Vac connection
18. AC heater
20. Water line heater (ice maker models)
21. Thermostat (ice maker models)
22. Fan
23. Fan thermostat
24. Display board

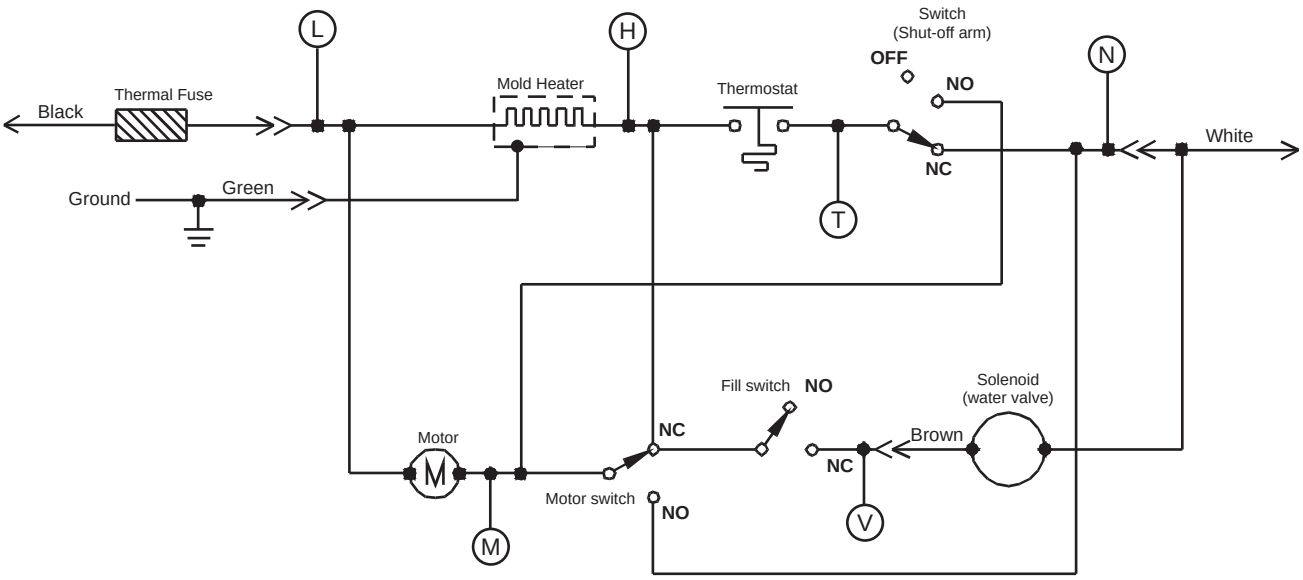

Figure 44. Ice maker wiring diagram

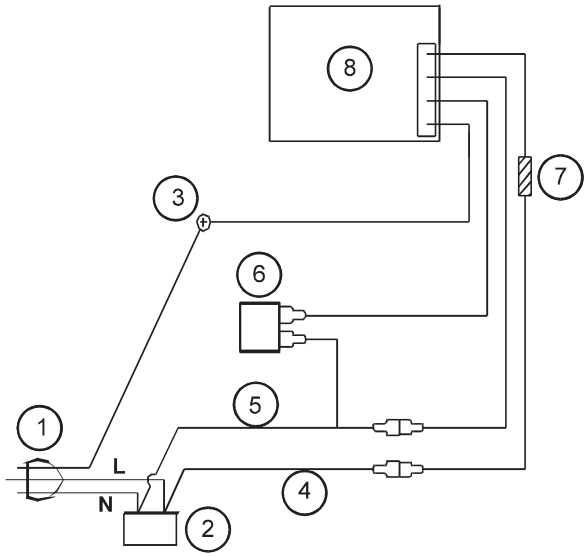

Figure 45. Ice maker wiring pictorial

1	120 Vac hot	5	Neutral/ribbed
2	PC board	6	Solenoid water valve
3	Ground screw	7	Thermal fuse
4	Hot/smooth	8	Ice maker

ICE MAKER COMPONENTS AND SERVICE

The ice maker is a factory installed accessory located on the right side of the freezer compartment. The components that support the ice maker are the wire harness, water fill tube, water fill line, and water valve. An ice maker cannot be added to a refrigerator that was manufactured without an ice maker.

Specifications

Cycle ..... One revolution (eject and water fill)
Water fill capacity ..... 4.7 fl. oz. (140 mL)
Ice yield ..... 3.5 lbs/24 hrs. (approximate)
Cycle duration ..... 3.5 to 7 minutes
Electrical rating ..... 185 W - 115 Vac - 60 Hz
Amp draw
  Cycle on/heater on ..... 1.6 A
  Cycle on/heater off ..... 0.3 A
  Cycle off ..... No amp draw
Motor ..... 1.5 W/8800 Ω
Mold heater ..... 185 W/72 Ω

Wire Harness

The ice maker wire harness, see Figure 46, connects the ice maker to the 120 Vac ice maker power cord. The assembly is bundled together with plastic ties. The wire harness runs through the surface of the cooling unit foam plug. On the upper ice maker end the harness has a modular plug with a locking tab (see Figure 51, page 52). Each wire on the harness has the appropriate connector to connect to the ice maker ac power cord (white ac cord). The four wires making up the wire harness are:

- **Black** - *Line voltage (L)* - black wire with female quick-connect terminal. This conductor is equipped with a thermal fuse. The thermal fuse is held onto the ice mold by a spring clip.
- **White** - *Neutral (N)* - white wire with male quick-connect terminal. It connects to the ac power cord neutral wire.
- **Brown** - *Water valve line voltage* - brown wire with female quick-connect terminal. It connects to the water valve solenoid, terminal M.
- **Green** - *Ground wire* - green wire with lug terminal. It connects to the refrigerator cabinet metal plate.

The refrigerator has to be removed from the enclosure to replace the ice maker wire harness.

NOTE

The ice maker wire harness is not the same nor is not connected to the wire harness that serves the power board and the optical display assembly, as described on pages 38 and 39.

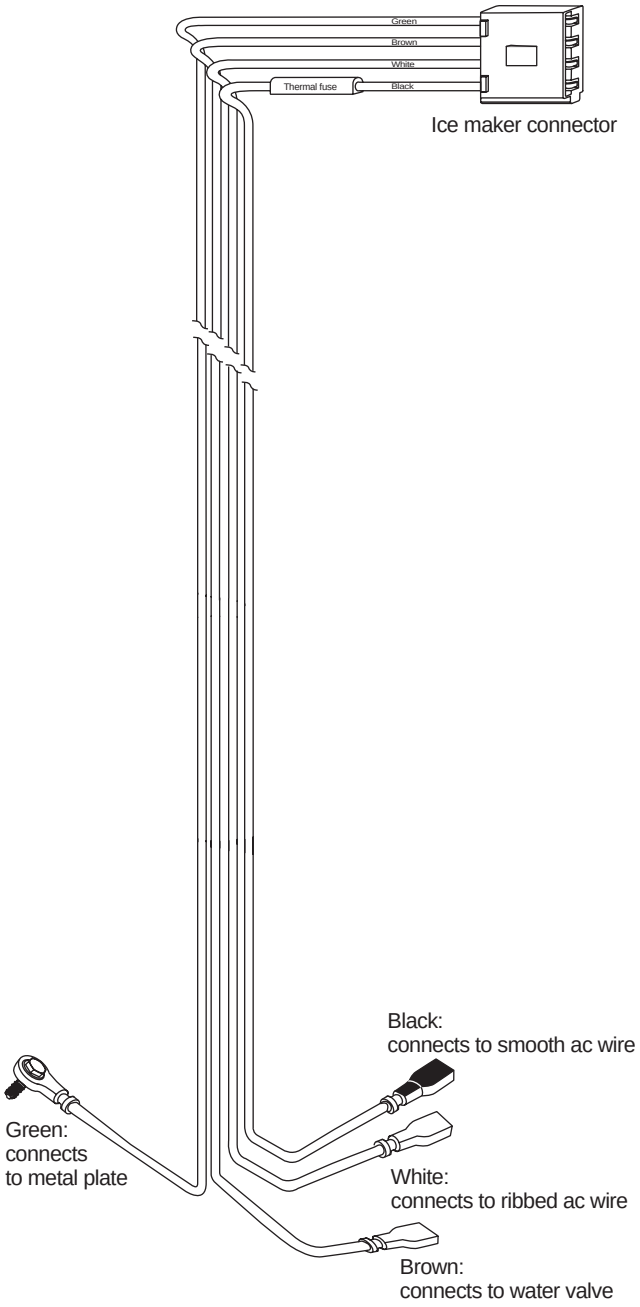

Figure 46. Ice maker wire harness

Water Fill Tube

The water fill tube connects the water fill line to the ice maker. It penetrates into the freezer cabinet from the rear of the refrigerator. This tube is factory installed and sealed and should not be disturbed or removed; it cannot be replaced. See Figure 47 for the location of the water fill tube.

Water Fill Line

The water fill line connects the water fill tube to the water valve at the bottom of the refrigerator. It is constructed of 1/4 inch plastic tubing. It connects to the water valve and water fill tube with 1/4 inch compression style fittings. See Figure 47. The water line is encased in a 12 Vdc foil style strip heater. To replace the water fill line the refrigerator must be removed from the enclosure.

12 Vdc Water Line Heater

The water line heater encases the entire length of the water fill line. This heater operates on 12 Vdc.

Heater operation is automatically controlled by a small thermostat. See Figure 47. The thermostat is “clipped” to the water valve bracket. It turns on the heater when the surrounding temperature is 38° F, ±4° (34° to 42° F). It turns off the heater when the temperature rises to 48°F.

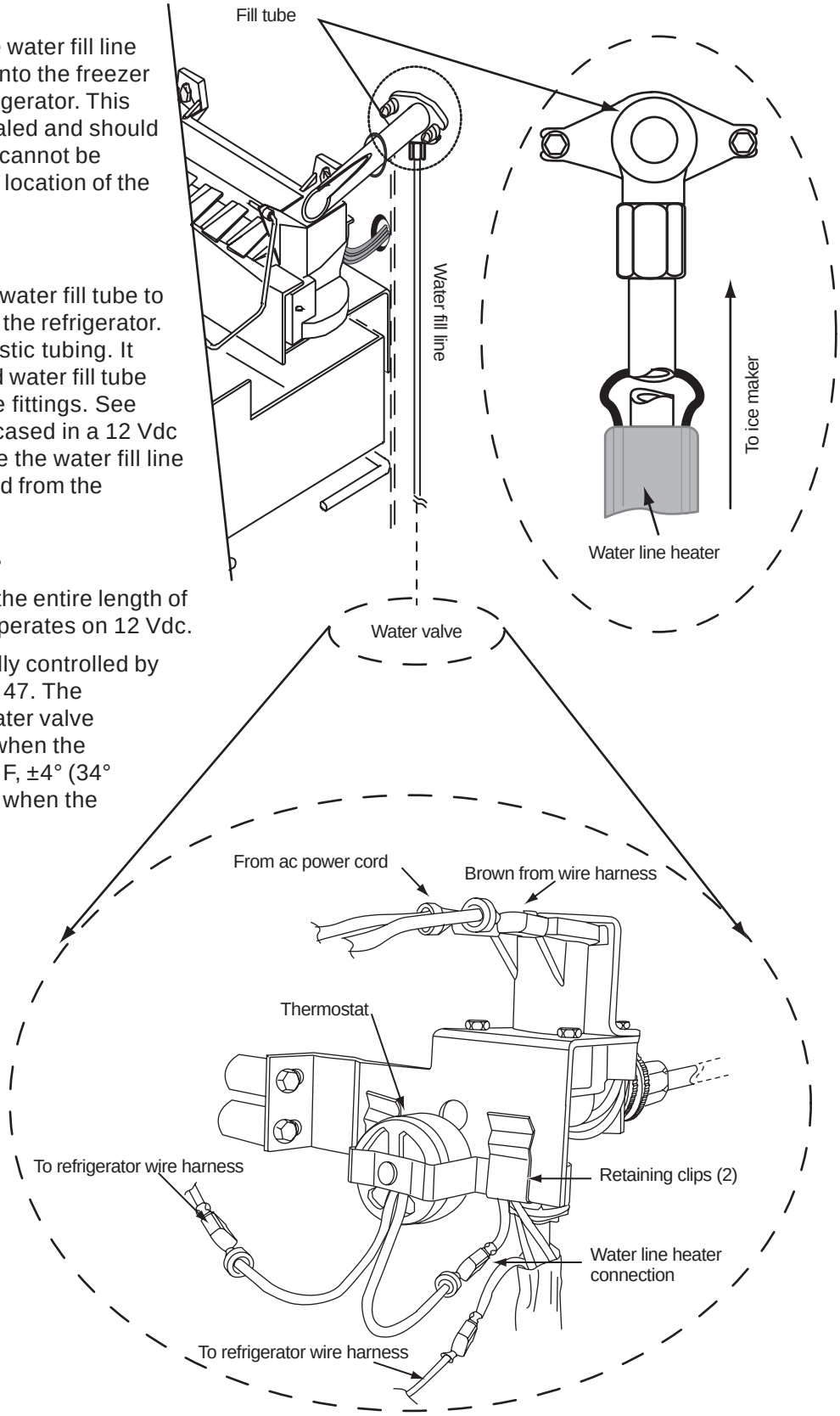

Figure 47. Water fill tube, line, and heater

Water Valve

The water valve, see Figure 48, is solenoid operated. This valve is located on the back of the cabinet on the bottom of the refrigerator The solenoid is supplied 120 Vac through the ice maker wire harness. Spring pressure maintains the valve shut when the solenoid is not energized.

Water Valve Replacement Procedure

1. Turn the refrigerator OFF.
2. Unplug both the ice maker ac power cord and the refrigerator ac power cord from the RV receptacle.
3. Shut off the water supply to the ice maker.
4. Disconnect the wires from the water valve solenoid terminals.
5. Disconnect the white heater wire from the thermostat wire (white-from-brown).
6. Disconnect remaining white heater wire from wire harness lead (white-from-red).
7. Disconnect the brown thermostat wire from wire harness (brown-from-red).
8. Disconnect the water supply line from valve's inlet fitting.
9. Disconnect the ice maker water line.
10. Remove the thermostat clips (2) and thermostat. Retain thermostat and clips.
11. Unwrap the heater wire from water valve.
12. Remove the water valve retaining screws, then remove the water valve/bracket assembly. Retain screws and spacers.

To install a replacement solenoid water valve:

1. Install the replacement water valve/bracket assembly on the refrigerator. Use screws and spacers previously removed.
2. Clip the thermostat to water valve bracket. Use clips previously removed.
3. Carefully wrap one white heater wire around the valve as shown in Figure 48. *Do not exceed two wraps at each point.*
4. Tape wire wraps to keep the wire turns in position and to keep wire turns from overlapping. *Do not allow wires to overlap.*
5. Connect the wrapped white heater wire to a thermostat wire (brown).
6. Connect the remaining white heater wire to the black wire connected to the refrigerator wire harness
7. Connect the remaining thermostat brown wire to the red wire connected to the refrigerator wire harness.
8. Connect ice maker water line, then tighten fitting firmly. *Do not overtighten.*
9. Connect RV water supply to water valve, then tighten fitting firmly*. Do not overtighten.*
10. Connect solenoid wires. *Brown wire to terminal M and wire from 120 Vac power cord to terminal B4.*
11. Open water supply to ice maker.
12. Plug in both ice maker ac power cord and the refrigerator ac power cord.
13. Turn refrigerator ON.

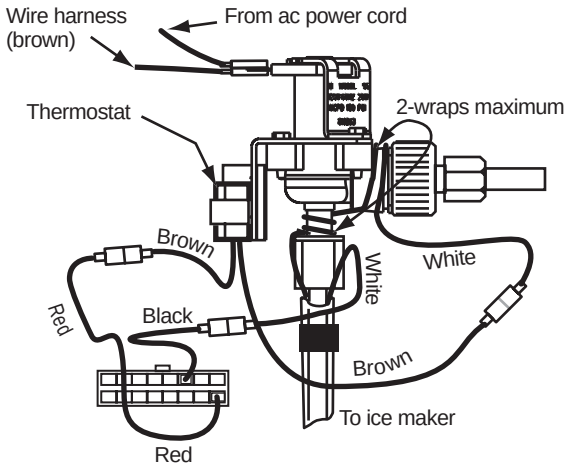

Figure 48. Solenoid water valve

Ice Maker Troubleshooting Chart

Problem	Probable Causes	Remedy
No ice in mold/no ice yield.	A. No ac power to ice maker B. No water available to water valve. C. Clogged water valve strainer. D. Water valve solenoid faulty.	A. Check ac power supply. B. Check water supply to valve. C. Clean water valve strainer. D. Test water valve. See page 53.
Not cycling, ice in mold.	A. No ac power to ice maker. B. Ice maker OFF. C. Mold overfilled. D. Water valve washer seal damaged.	A. Check ac power supply. B. Lower shutoff arm to ON position. C. Check position of water valve orifice. Reposition components. See Figure 49. D. Replace water valve.
Water dripping from mold/mold overflowing.	A. Water fill adjustment screw set incorrectly. B. Water valve washer seal damaged.	A. Readjust water adjustment screw. See page 54. B. Replace water valve. See page 50.
Not cycling, ac power available.	A. Mold heater failed open. B. Motor faulty. C. Mold thermostat faulty. D. Wire harness thermal fuse open.	A. Check motor continuity. See page 55. B. Check motor continuity. See page 55. C. Replace ice maker. See page 52. D. Check continuity of black wire harness wire.

Water Valve Service

The water valve inlet strainer should be checked annually for scale and sediment deposits. The inlet connection internal components should only be checked when the mold overfills. To access the strainer and the components housed in the inlet fitting (see Figure 49):

1. Shut off the water supply to the ice maker.
2. Disconnect the inlet fitting adapter from the water valve inlet.
3. Check strainer position. If the strainer is seated approximately 1/8 inch in the fitting, the orifice seat, orifice, diffuser plate and strainer are in their correct position. A creased strainer end usually indicates that the diffuser plate, orifice, and orifice seat are not in their correct position. These components should be repositioned as shown in Figure 49. To reposition components correctly:
   a. Press the orifice seat fully against the valve support, then seat the orifice firmly into the orifice seat.
   b. Seat the diffuser plate firmly against the orifice.
   c. Seat the strainer firmly against the orifice plate.
   d. Reconnect the inlet fitting adapter to the water valve.

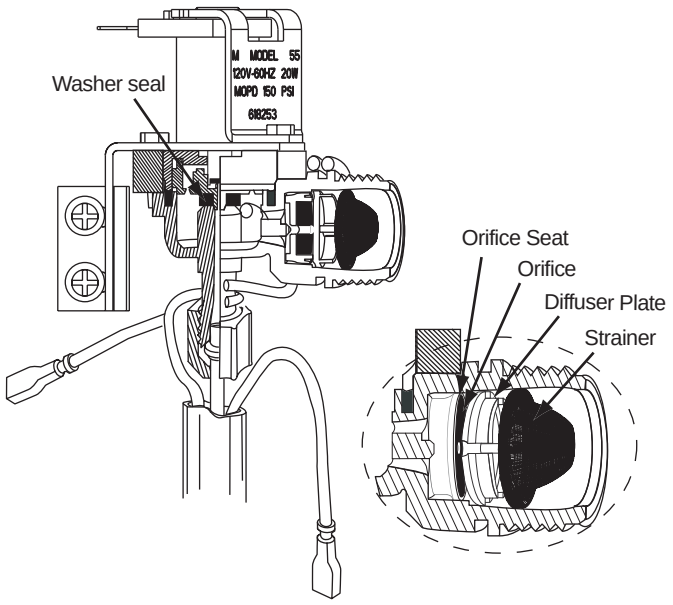

Figure 49. Solenoid water valve components

Replacing Ice Maker

Removal of existing ice maker:

NOTE

Be sure to save all screws and other components removed from the existing ice maker in this procedure, as these screws and components will be used when installing the replacement ice maker.

1. Turn refrigerator OFF.
2. Unplug both the ice maker ac power cord (white) and the refrigerator ac power cord (black).
3. Remove the ice bin, then remove the freezer shelf.
4. Unfasten two retaining screws to detach the ice maker from mounting plate. See Figure 50. Save screws.
5. Unfasten two freezer plate screws to detach mounting plate from the freezer. Save screws and flat washers.
6. Unfasten the upper bracket screws. Save screws.
7. Rotate ice maker until the front of the cover faces the door opening, then remove the cover.
8. Unclip the thermal fuse from the mold. See Figure 51.
9. Unplug the wire harness connector. See Figure 51.
10. Remove shutoff arm. Save shutoff arm.

Installation of replacement ice maker:

1. Install the shutoff arm onto the replacement ice maker.
2. Plug the wire harness connector into the ice maker. *Make sure connector locks into ice maker connector.*
3. Clip the thermal fuse to the mold.
4. Install the cover, then rotate ice maker parallel with the freezer plate, then align the upper bracket with screw holes.
5. Install and fasten the upper bracket screws. *Do not overtighten screws.*
6. Install the mounting plate.
7. Fasten the mounting plate to the ice maker with two retaining screws. *Do not overtighten retaining screws.*
8. Install retaining screws to fasten the ice maker to the mounting plate. *Do not overtighten screws.*
9. Install the freezer shelf, then install the ice bin.
10. Plug both the ice maker and the refrigerator ac power cords into the RV receptacle.

NOTE

Plug white ac power cord into ac outlet labeled “Ice Maker.” Plug black ac power cord in outlet labeled “Refrigerator.”

11. Turn refrigerator ON.

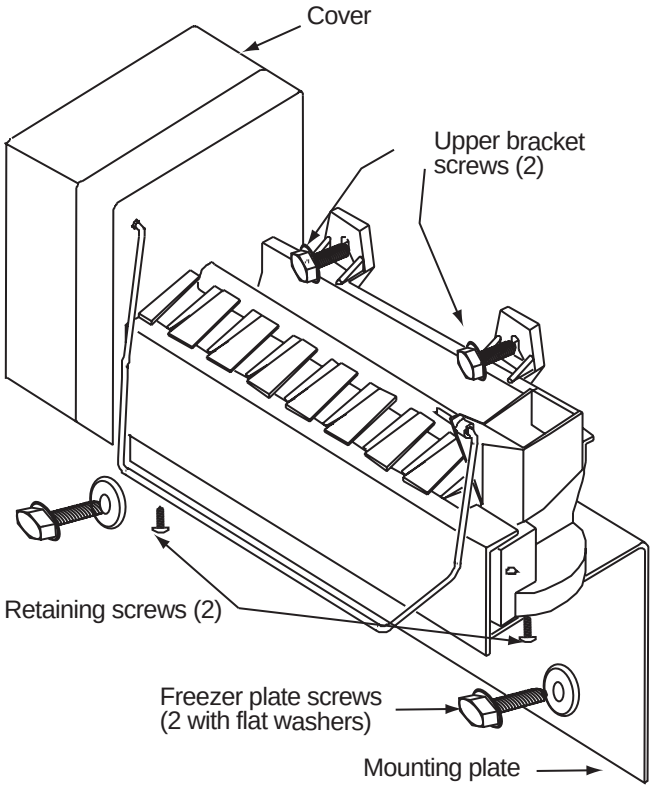

Figure 50. Ice maker screw locations

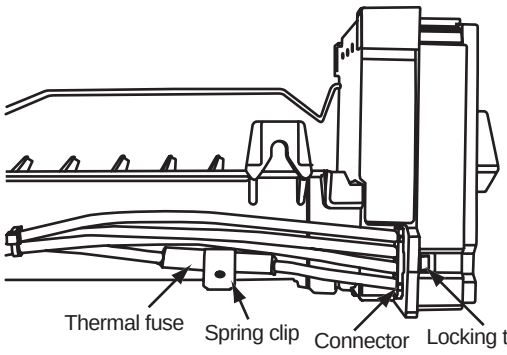

To disconnect the wire harness from ice maker:

1. Unclip thermal fuse.
2. Push connector in.
2. Press in locking tab with small flat blade screwdriver.
3. While pressing locking tab, pull back on wire harness to unplug the connector from ice maker.

Figure 51. Wire harness connection to ice maker

Cycle Testing Ice Maker

Cycle testing the ice maker verifies if the ice maker completes all cycle functions. *The cycle test is to be done with the ice maker dry.* To cycle the ice maker operation manually:

1. Shut off the water supply to the ice maker water valve.
2. Make sure 120 Vac is available to the ice maker.
3. Remove ice maker cover.
4. Make sure shutoff arm is in the down position (on).

> ***CAUTION!***
> Remove jumper wire immediately after “click” sound or no later than 15 seconds after jumping terminals T and H. Failure to remove jumper wire may damage the ice maker.

5. Jump terminals T and H. Use a 14 AWG jumper wire with 1/2 inch insulation stripped from ends. Jumper wire is shown in Figure 52. The jumping of T and H is shown in Figure 53.
6. The ejector should begin to rotate clockwise starting at the 2 o’clock stop position.
7. Remove jumper wire from terminals T and H when a “click” sound is heard and no later than 15 seconds after jumping the terminals.
8. Observe ice maker operation as ejector rotates.
9. After the ice cubes break loose from the mold, the ice maker should cycle without stopping. If the ice maker stops, or makes loud noises, replace ice maker. See section "Replacing Ice Maker," page 52.

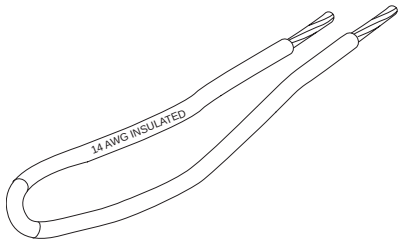

Figure 52. Jumper wire

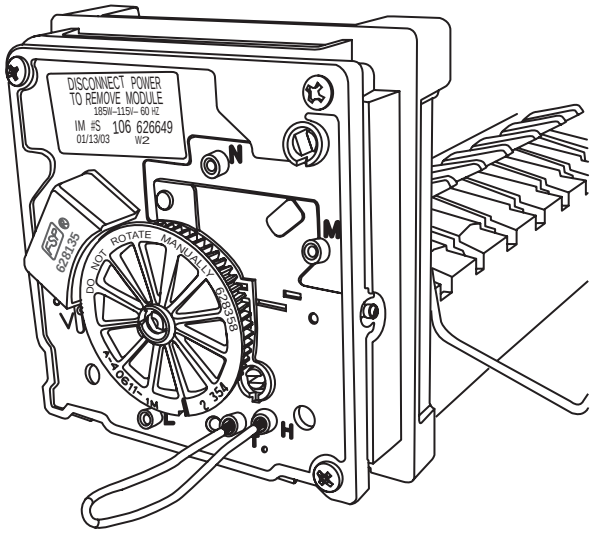

Figure 53. Cycle testing ice maker

Checking Water Valve Operation

To check water valve operation:

1. Remove the ice maker cover.
2. Jump test point V and L. See Figure 54. Use a 14 AWG jumper wire with 1/2 inch insulation stripped from each end (as shown in Figure 52). The solenoid should click and buzz if it is operating properly. If the solenoid does not click and buzz, replace the water valve (see page 50).

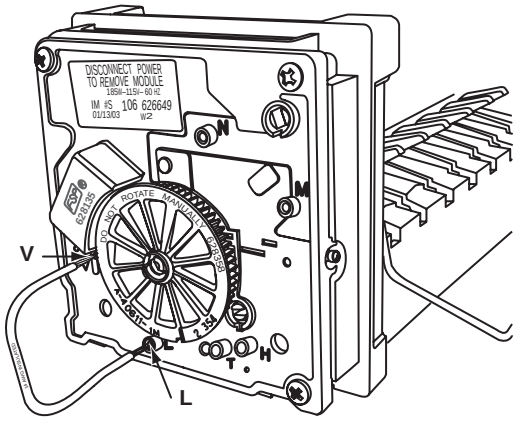

Figure 54. Checking water valve operation

Water Fill Adjustment

The water fill adjustment screw is set at the factory. Often times, the production of thin ice cubes or the ice maker not cycling correctly is related to an unauthorized field adjustment to the water fill adjustment screw. Proceed as follows to adjust the water fill adjustment screw.

1. Remove the two screws holding the ice maker to the mounting plate. See figure 50, page 52.
2. Remove the mounting plate from the freezer plate.
3. Remove two screws from the ice maker upper mounting brackets.
4. Position the ice maker with the cover facing out. *Do not pull on wire harness.*
5. Locate the screw and contact alignment opening shown in Figure 55.
6. Determine the position of the hole in the internal contact plate. *Do not adjust the water fill adjustment screw if the hole is centered within the housing hole*. See Figure 55.

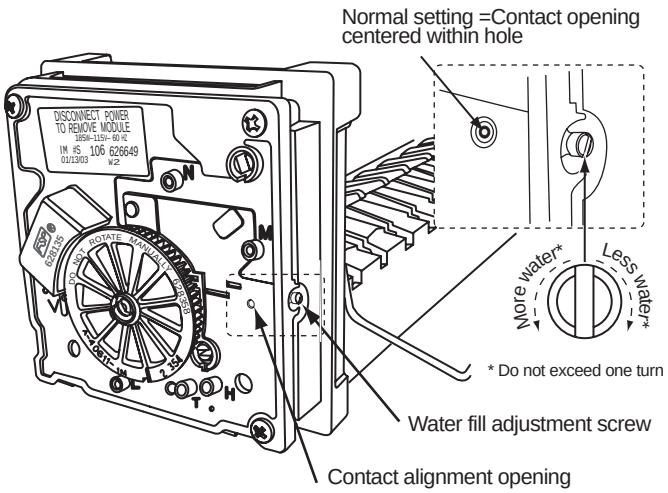

Figure 55. Water fill adjustment screw

> **! *CAUTION!***
>
> Do not turn the water fill adjustment screw over one turn. Turning the screw over one turn may damage the contacts. A 1/4 turn, clockwise or counterclockwise, will vary the fill by 0.34fl.oz. (10 mL).

7. To readjust the water fill level turn the adjustment screw clockwise or counterclockwise as required until the contact hole is centered in the module hole. See Figure 55.

Checking Water Valve Solenoid Resistance

To check water valve solenoid resistance:

1. Disconnect ac power to the ice maker.
2. Remove the ice maker cover.
3. Set multimeter to Ohm scale, then connect probes to test points V and N. See Figure 56. The test probe tips must be 1/2 inch long to make full contact with internal terminals.
   - 295 to 360Ω–water valve solenoid operating properly.
   - OL–check for loose wire harness connections at water valve or an open solenoid coil.
   - 00.0Ω–check resistance at solenoid terminals and wire harness continuity.

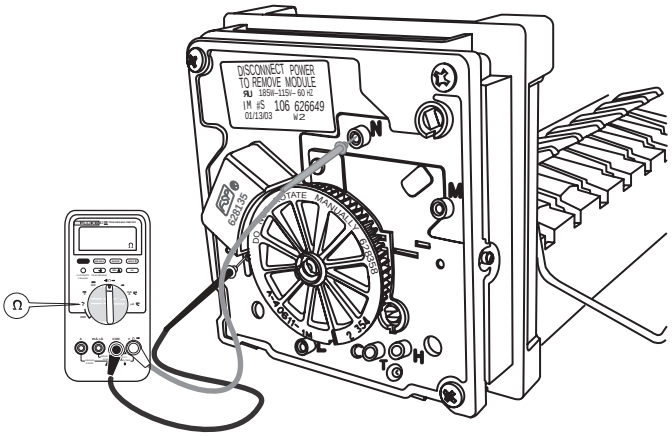

Figure 56. Checking solenoid resistance

Checking Mold Heater Resistance

To check the mold heater resistance:

1. Unplug the ice maker ac power cord.
2. Remove ice maker cover.
3. Set multimeter to Ohm scale, then connect probes to test points L and H. Test probe tips must be 1/2 inch long to make full contact with internal terminals. See Figure 57.
   - 71 to 79 Ω–mold heater is operating properly.
   - Below 71 Ω or above 79 Ω–replace ice maker.
   - OL–open heater, replace ice maker.

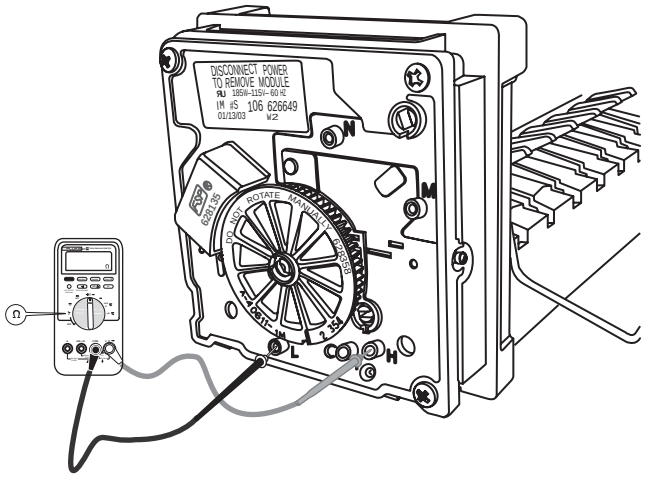

Figure 57. Checking mold heater resistance

Checking Voltage to Motor

To check voltage supply to motor:

1. Make sure 120 Vac is available to the ice maker.
2. Remove ice maker cover.
3. Set multimeter to ac scale, then connect probes to test point N and M. See Figure 58. Test probe tips must be 1/2 inch long to make full contact with internal terminals. Voltage at the motor should measure 108 to 132 Vac.
   - Voltage higher than 132 Vac–check incoming ac power source and correct overvoltage condition.
   - Voltage lower than 108 Vac–check incoming ac power source and correct under-voltage condition.
   - No voltage present–check wire connections and continuity through thermal fuse.

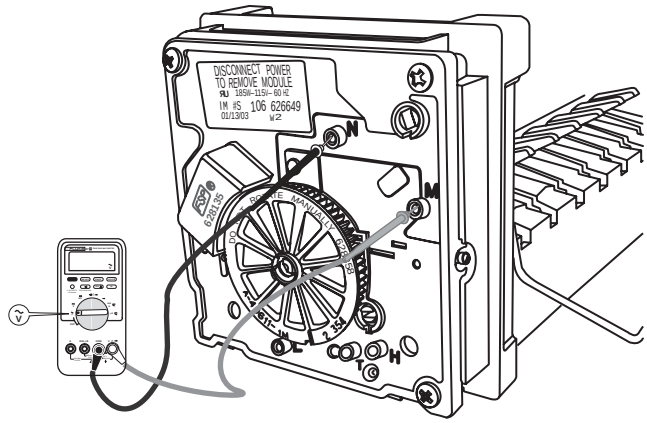

Figure 58. Checking voltage to motor

Winterization

To winterize the water valve and water line:

1. Shut off RV water supply to the ice maker.
2. Raise and lock shutoff arm in OFF position.
3. Disconnect the water inlet adapter from water valve.
4. Disconnect the ice maker water line from water valve.

NOTE

Do not unwrap the water line heater wire from the water valve outlet connection.

5. Drain RV water supply line and ice maker water fill line.
6. Bag and tape shut all connections.

NORCOLD®
P. O. Box 4248
Sidney, OH 45365-4248

NORCOLD CUSTOMER SERVICE
Telephone 1-800-444-7210
Fax 937-497-3183
World Wide Web ..... www. norcold.com/cda