Avallon

USERS GUIDE

Installation, Operation, and Maintenance for your wine cooler.

SINGLE ZONE WINE COOLER
Model- AWC540SZ

Important Safety Information

Improper handling can cause serious damage to the Avallon wine refrigerator and/or injury to the user. This wine refrigerator is designed for domestic indoor use only. Do not use the unit for industrial or commercial use. Any other use may invalidate the warranty. Please review the rating label located on the rear panel of the unit for electrical and other technical data related to this unit. The unit must be used in a properly grounded wall outlet. **Please read and follow the safety information listed below to reduce the risk of fire, electric shock or injury.**



ELECTRICAL SAFETY

- Do not exceed the power outlet ratings.
- It is recommended the wine refrigerator be connected on its own circuit.
- The unit must be installed in accordance with state and local electrical codes.
- A standard electrical supply (115 V, 60Hz), that is properly grounded in accordance with the National Electrical Code and local codes and ordinances is required.
- Use outlets that cannot be turned off by a switch or pull chain.
- Always turn the unit off and unplug it from the outlet when cleaning.
- Unplug the unit if it is not going to be used for an extended period of time.
- Do not operate the unit with a power plug missing the ground plug, a damaged cord or a loose socket.
- Be sure the wine refrigerator is properly grounded.
- Never plug or unplug the unit with wet hands.
- Do not bypass, cut or remove the grounding plug.
- Do not use extension cords or power strips with this unit. You may need to contact your electrician if it is necessary to use a longer cord or if you do not have a grounded outlet. Do not modify the power cord's length or share the outlet with other appliances.
- Do not start or stop the unit by switching the circuit's power on and off.
- If the power cord is damaged, it must be replaced by the manufacturer or a qualified technician.
- Never repair the unit while it is plugged in.
- Immediately unplug the unit if it makes strange sounds, emits smells or smoke comes out of it, and contact customer service.
- Do not remove any part of the casing unless instructed by an authorized technician.
- You should never attempt to repair the unit yourself. Contact customer service for service options if the unit needs service.



GENERAL SAFETY

- To prevent back and other types of injuries, use at least two people to move and install the wine cooler.
- This appliance is not intended for use by persons, including children, with reduced physical, sensory or mental capabilities, unless they have been given supervision or instruction concerning the use of the appliance by the person(s) responsible for their safety.
- Install the wine refrigerator in a well ventilated area where the ambient temperature is above 50°F and below 95°F.
- The temperature range for this cooler is optimized for wine and beverage storage. Perishable food items may require a different storage environment.
- Do not place hot or warm items into the cooler before they cool down to room temperature.
- This unit is designed to be installed indoors, and protected from rain, sleet, snow, and/or moisture.
- Never allow children to crawl inside the wine refrigerator. If disposing the unit, remove the door.
- Do not use this appliance near flammable gas or combustibles, such as gasoline, benzene, thinner, etc.
- Do not place the unit near heat sources such as ovens, grills, or direct sunlight.
- Only use in an upright position on a flat, level surface and provide proper ventilation.
- Do not pinch or kink the power supply line between the unit and cabinet.
- Do not place any other appliances on top of the unit.
- Do not turn the unit upside down, on its side, or at an angle off level.
- If your model wine cooler is equipped with a lock, take care to keep the keys away from children.
- Do not move the unit without emptying the contents and securing the door in a closed position.

Table of Contents

Important Safety Information	2
Table of Contents	3
Introduction	4
Parts Identification	5
Installing Your Wine Refrigerator	6
Installation Clearance Requirements	7
Electrical Requirements	8
Leveling Your Wine Refrigerator	8
Installing your Door Handle and Shelves	9
INSTALLING THE DOOR HANDLE:	
Operation	10
INSTALLATION CHECK LIST BEFORE OPERATION	
USING YOUR CONTROL PANEL	
Normal Sounds	11
Defrosting	11
Preparing your Wine Refrigerator for Storage	11
Cleaning and Maintenance	12
EXTERIOR CLEANING	
INTERIOR CLEANING	
Trouble Shooting	13
Specifications	14
Warranty	15

First Time Operating Instructions:

Before use, make sure all packaging labels and materials are all removed from the unit. Be sure to keep track of all in cluded parts and pieces before discarding packaging materials. It is advised that you keep the original box and packaging materials in case you are ever to move or ship the appliance in the future.

Allow the unit stand for at least 24 hours before you use it; this allows the cooling components time to settle from transit. The instruction manual should be read before use.

This owner's manual is provided for reference use only. Specifications may change without prior notice. Refer to the product label on the back of your wine refrigerator for the latest technical information.

Introduction

Thank you for purchasing your Avallon wine refrigerator. Avallon is dedicated to developing products that will enhance your lifestyle with superior quality and distinctive features. Please visit www.avallon.com for more information on your product and other Avallon products.

This manual contains important information regarding the proper installation, use and maintenance of your wine refrigerator. Following this manual will ensure that your product will work at its peak performance and efficiency.

Please save the original product packaging in case you need to safely transport your wine refrigerator.

For Your Records:
Please write down the model number and serial number below for future reference. Both numbers are located on the ratings label on the back of your unit and are needed to obtain warranty service. You may also want to staple your receipt to this manual as it is the proof of your purchase, and is also needed for service under your warranty.

Model Number:

Serial Number:

Date of Purchase:

To better serve you, please do the following before contacting customer service:

• If you received a damaged product, immediately contact the retailer or dealer that sold you the product.

• Read and follow this instruction manual carefully to help you install, use and maintain your wine refrigerator.

• Read the troubleshooting section of this manual as it will help you diagnose and solve common issues.

• Visit us on the web at http://www.avalllon.com to register your product, download product guides, additional troubleshooting resources and up-to-date information.

•If you need warranty service, our friendly customer service representatives are available via email at service@avallon.com or by telephone at 1 (866) 471-7427.

Parts Identification

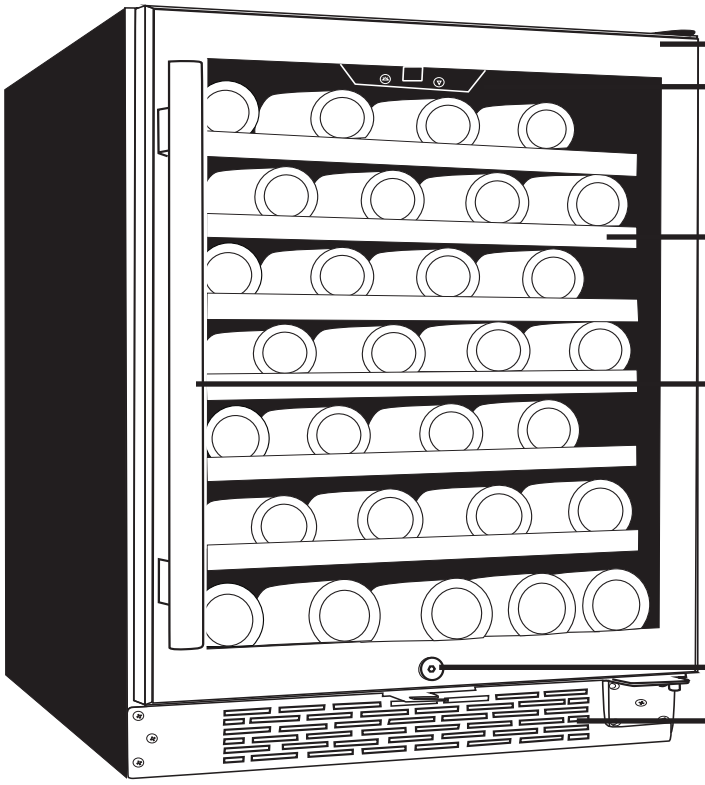

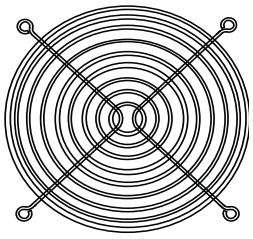

Internal Fan

This is an air-cooled unit equipped with an internal fan that helps to provide a more consistent temperature.



Carbon Filter

A built-in carbon filter protects your wine by acting as a natural barrier against harmful odors.

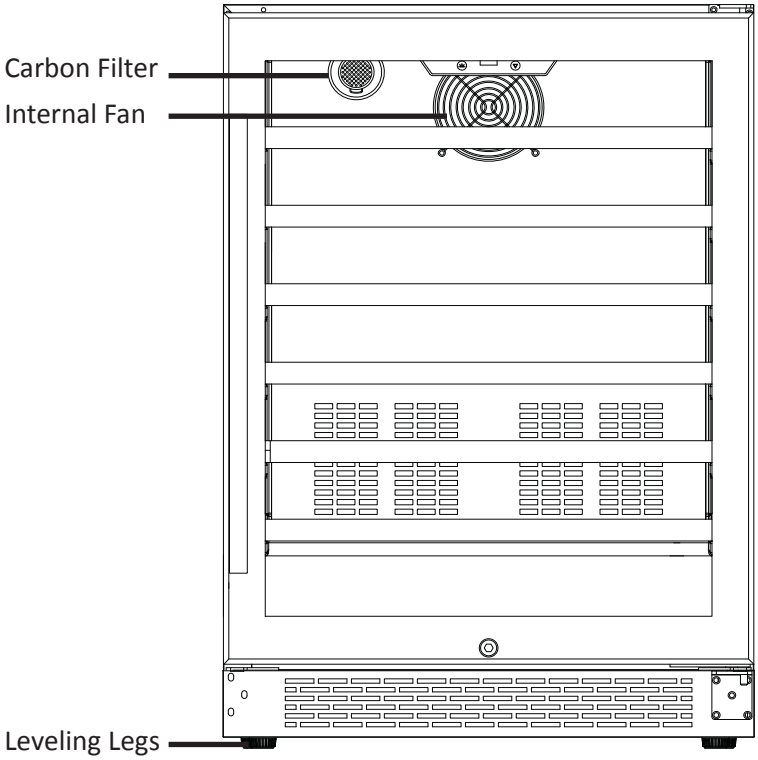

Note: The carbon filter should be replaced every 3-6 months depending on the unit's exposure level to odor. If the unit is placed in kitchen regular replacement every 3 months is ideal.

Tip: Gather the model and serial number from the product label and write down before installing the wine cooler.

Installing Your Wine Refrigerator

The wine refrigerator should be installed in accordance with local electrical code requirements. The wine refrigerator should also be placed in a location that is strong enough to support its total weight, keeping in mind that it will weigh substantially more when fully loaded than when empty.

Before you plug the wine refrigerator into a power supply, be sure to let it stand upright for at least 24 hours to allow the compressor's oils to settle.

Unpacking the Wine refrigerator

WARNING: Use two more people to move and install the wine refrigerator. Failure to do so can result in back or other injury. Carefully remove the packaging materials. Remove any shipping tape and glue from your wine refrigerator before using. Do not use sharp instruments, rubbing alcohol, flammable fluids, or abrasive cleaners to remove tape or glue. These products can damage the surface of your wine refrigerator.

IMPORTANT: Do not remove any safety, warning, or product information labels from your wine refrigerator.

TYPES OF INSTALLATION:

This wine refrigerator has been designed for free-standing, or built-in installation. In every case, there must be adequate ventilation and access for service.

Free-standing installation:
A free-standing installation will allow you to install the wine refrigerator in almost any place you desire. You must follow the stated instructions for electrical requirements, and leveling the wine refrigerator.

Built-in installation:
A recessed installation will allow you to install the beverage cooler under a counter or in a kitchen cabinet provided the required clearance space around the beverage cooler is followed.

It is necessary to allow adequate ventilation space around the unit (make sure there is at least some ventilation room for the back of the unit). The following additional items must be observed.

1. Place the wine refrigerator in front of the installation location. Adjust the feet and place the unit flat on the floor or on a platform depending on your installation requirements.
2. If the electrical outlet for the wine refrigerator is behind the cabinet, plug in the wine refrigerator.
3. Push the wine refrigerator into position.

WARNING: Do NOT install the wine refrigerator behind a closed cabinet door.

Installation Clearance Requirements

When installing the wine refrigerator under a counter, follow the recommended spacing dimensions shown.

• To ensure proper service access and ventilation, allow between 2-3 inches of clearance at the back as shown in the below diagram.

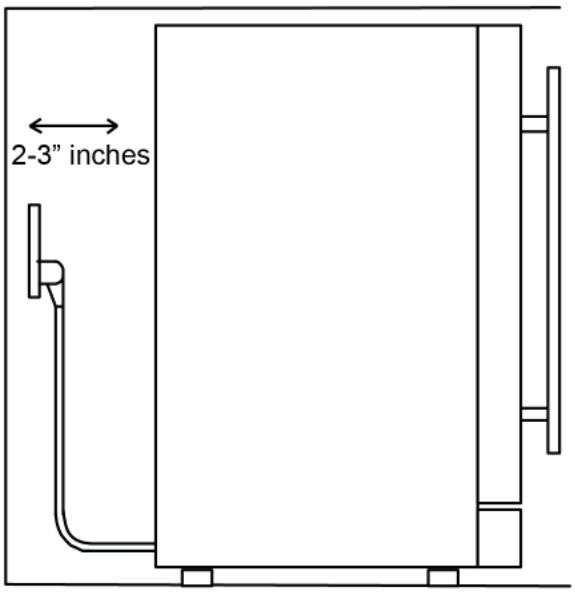

• The installation should allow the unit to be pulled forward for servicing, if necessary.

• The wine refrigerator should be installed on a firm and level surface that will be able to support the entire weight of a fully loaded unit. It is important for the wine refrigerator to be level in order to work properly. If needed, you can adjust the height of the wine refrigerator by rotating the feet. See the “Leveling the Wine refrigerator” section.

• A standard electrical supply (115 VAC only, 60 Hz), properly grounded in accordance with National Electrical Code and local codes and ordinances is required.

Electrical Requirements



ELECTRICAL SHOCK HAZARD!

- **Plug into a grounded 3-prong outlet**
- **Never remove the grounding prong from the plug**
- **Never use an adapter to bypass the grounding prong**
- **DO NOT use an extension cord**
- **Failure to follow these instructions can result in fire, electrical shock, or personal injury.**

Before you move your wine refrigerator into its final location, it is important to make sure you have the proper electrical connection:
A standard electrical supply (115 V, 60Hz), properly grounded in accordance with the National Electrical Code and local codes and ordinances, is required.

It is recommended that a separate circuit, serving only your wine refrigerator, be provided. Use receptacles that cannot be turned off by a switch or pull chain.

The fuse (or circuit breaker) size should be 3 Amps.
Recommended grounding method
For your personal safety, this appliance must be grounded. It is equipped with a power supply cord having a 3-prong grounding plug. To minimize possible shock hazard, the cord must be plugged into a mating 3-pronged wall socket, and grounded in accordance with the National Electrical Code and local codes and ordinances. If a mating wall socket is not available, it is the personal responsibility of the customer to have a properly grounded, 3-prong wall receptacle installed by a qualified electrician.

Leveling Your Wine Refrigerator

It is important for the wine refrigerator to be leveled in order to work properly. It can be raised or lowered by rotating the plastic sheaths around each of the feet on the bottom of the machine. If you find that the surface is not level, rotate the feet until the wine refrigerator becomes level .You may need to make several adjustments to level it. We recommend using a carpenter's level to check the machine.

1. Place a carpenter's level on top of the product to see if the wine refrigerator is level from front to back and side to side.
2. Adjust the height of the feet as follows:
Turn the leveling feet to the right to lower that side of the refrigerator.
Turn the leveling feet to the left to raise that side of the refrigerator.

IMPORTANT: Once you are ready to install it in a cabinet or directly on the floor, you must adjust the feet to level the wine refrigerator.

Installing your Door Handle and Shelves

INSTALLING THE DOOR HANDLE:

1. Open the door and carefully pull the door gasket around the area where the handle is to be installed.
2. Carefully remove the two pre-installed decorative plugs from the front of the door. Note: some wine coolers do not have decorative plugs installed.
3. Insert each Phillips head screw through the gasket side of the door until the screw pass through the door.
4. Align the handle with the screws and tighten using a Phillips head screwdriver until the handle is flush against the door frame. CAUTION: Do not over-tighten the screws as this may cause damage to the handle or to the stainless steel door
5. Carefully press the door gasket into its original position.

Tip: To prevent damaging the door gasket, make sure to open the door all the way before pulling the shelves out of their track.

INSTALLING THE SHELVES:

<u>To install the shelves:</u>
1. Open the door completely.
2. Slide the shelf on the shelf track and slowly push back until it stops.
3. Push down on the front of the shelf to allow the back of the shelf to lift over the plastic post. (Imagine a seesaw movement.) Continue to push the shelf back until both notches pass through the plastic posts on each side of the shelf track.
4. Continue to push the shelf back.

<u>To remove the shelves:</u>
1. Open the door completely.
2. If necessary, make sure you remove all the contents sitting on the shelf.
3. Pull the shelf forward until the notch aligns with the plastic post on each side of the shelf track.

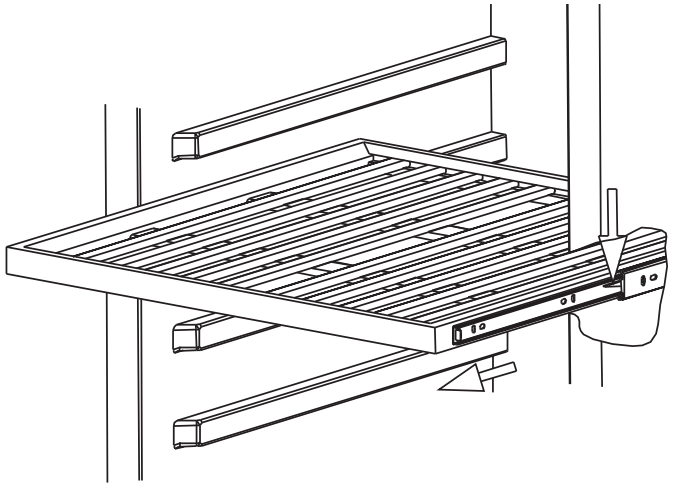

4. Lift the shelf until both notches pass through the posts.
5. Continue to pull the shelf forward until it is completely removed from the inner compartment.

Operation

INSTALLATION CHECK LIST BEFORE OPERATION

1. Have all packing materials and tape been removed from the interior and exterior of the wine refrigerator?
2. Have the installation instructions been followed, including connecting the machine to electricity? And has proper grounding been installed for the wine refrigerator?
3. Has the machine been leveled?
4. Is the wine refrigerator in a site where the ambient temperature is between 50º F and 95º F all year round?
5. Is there a clearance of at least 2 to 3” at the rear for proper air circulation?

USING YOUR CONTROL PANEL

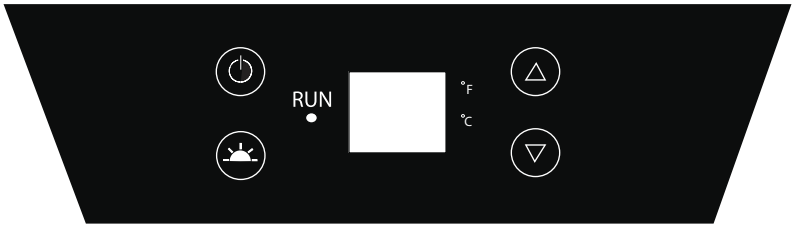

This wine cooler has a temperature range from 40°F to 65°F.

SELECTOR BUTTONS

POWER BUTTON: Press and hold down for three seconds to power your unit on, once pressed the “Run” indicator light will illuminate to indicate the unit is on and running. Press and hold for three seconds again and the unit will power off and the “Run” Indicator light will turn off.

INCREASE TEMPERATURE: Press to increase the temperature by 1 degree increments.

DECREASE TEMPERATURE: Press to decrease the temperature by 1 degree increments.

INTERIOR LIGHT: Press this button to turn on the interior LED light. Press again to turn the light off.

INDICATOR LIGHTS/DISPLAYS

Temperature Display: Shows the set temperature and current temperature in the upper zone.

°F
°C

This unit can be displayed in Fanrenheit or Celsisus. To change between press and hold the Increase and Decrease Temperature buttons at the same time for five seconds. A sound will then beep and the indicator light will illiuminate next to desired temperature setting.

RUN

When lit, the unit is in cooling mode.

Note: Allow at least 24 hours for your wine cooler to run before storing your wines and to allow the temperature to acclimate. Whether your wine cooler can reach the actual set temperature depends on the ambient environmental conditions.

Tip: If you powered off the unit, please wait at least 5 minutes before powering it back on.

Normal Sounds

Your new wine refrigerator may make sounds that are not familiar to you. Most of the new sounds are normal. Hard surfaces like the floor, walls can make the sounds seem louder than they actually are. The following describes the kinds of sounds that might be new to you and what may be making them.

• Rattling noises may come from the flow of the refrigerant or the water line, Items stored on top of the wine refrigerator can also make noises.
• The high efficiency compressor may make a pulsating or high-pitched sound.
• Water running from the evaporator to the water bin may make a splashing sound.
• As each cycle ends, you may hear a gurgling sound due to the refrigerant flowing in your wine refrigerator.
• You may hear air being forced over the condenser by the condenser fan.

Defrosting

Note that under most refrigerating settings, the unit will automatically defrost under most ambient conditions. However, on colder settings, some frost may build up. Additionally, the more humid the ambient conditions, the more frost may build up. Keep the door closed as much as possible and avoid opening the door unnecessarily to minimize frost build-up.

If frost is preventing the door from closing properly, you may need to power the unit off until the frost melts. Use a soft absorbent towel to dry the unit.

WARNING: Never attempt to remove frost with a sharp object!

Preparing your Wine Refrigerator for Storage

If the wine refrigerator will not be used for a long time, or is to be moved to another place, it will be necessary to defrost the unit and dry the interior.

1. Disconnect the cooler from the power supply by removing the power plug from the wall socket.
2. Leave the door open to allow for air circulation and to prevent mold, mildew and unpleasant smells.

CAUTION: Store the unit out of the reach of children. If you have children, you may want to take additional precautions such as removing the door to prevent a child from being trapped inside the cooler!

Important:
DO NOT touch the power plug when your hands are wet.
NEVER unplug the unit by pulling the plug.

Cleaning and Maintenance

Periodic cleaning and proper maintenance will ensure efficiency, top performance, and long life.

EXTERIOR CLEANING

The door and cabinet may be cleaned with a mild detergent and lukewarm water solution such as 2 tablespoons of baking soda to 1 quart of water.

Do not use solvent based or abrasive cleaners. Use a soft sponge and rinse with clean water. Wipe with a soft clean towel to prevent water spotting. If the door panel is stainless steel, it can discolor when exposed to chlorine gas and moisture. Clean stainless steel with a cloth dampened with a mild detergent and warm water solution. Never use an abrasive or caustic cleaning agent.

INTERIOR CLEANING

The wine refrigerator's interior should be cleaned occasionally.

1. Disconnect power to the unit.
2. Open the door and remove the contents and shelves.
3. Wait until the unit defrosts.
4. With a clean cloth, wipe down the interior of the unit.
5. Reinsert the shelves and beverages.
6. Reconnect power to the unit.

Trouble Shooting

ISSUE	POSSIBLE CAUSE	SOLUTION
The wine cooler turns on and off frequently.	• The room temperature is higher than the recommended ambient environment. • The door is being opened often. • The door is not completely closed. •The door gasket is not sealing properly. •The cooler does not have the suggested ventilation.	• Run the cooler at the appropriate ambient temperature. • Minimize the number of times the door is opened. • Make sure the door is completely closed. • Make sure the door gasket is properly sealed. • Read and follow the “Installation Clearance Requirements” section.
The wine cooler does not turn on.	• There is a power failure. • The cooler is not plugged in. • A house fuse has blown or the circuit breaker is tripped.	• Ensure the cooler is plugged in and the power outlet has power. • Plug the unit in to a power outlet that has sufficient amperage. • Replace the broken fuse in your fuse box or reset the breaker.
The wine cooler will not reach the desired temperature	• The cooler is placed too close to a heat source. • The cooler does not have sufficient ventilation. • The door is opened too frequently or for long periods of time.	• Keep the cooler away from direct sunlight or other heat sources. • Read and follow the “Installation Clearance Requirements” section. • Close the door tightly and do not open the door too frequently or for long periods of time.
The wine cooler is making strange noises	• Certain sounds are normal • The unit is not level or is touching another appliance.	• Read the “Normal Sounds” section. • Check to make sure that the cooler is level and that it is not in contact with another appliance or furniture.
The body of the wine refrigerator is electrified	• The unit is not properly grounded.	• Contact your local electrician to test your electrical grounding system.
Frost is forming in the wine cooler	• The environment is humid. • The ambient temperature is too low. • The door is being opened too frequently.	Through the unit uses an “auto-defrost” system, under certain conditions, manual defrosting may be required. If frost builds up, you can try running the cooler on a warmer temperature setting, minimizing the number of times you open the door, or unplugging the unit to allow the frost to melt.
The door will not shut properly	• The cooler is not level. • The door gasket is dirty. • The door gasket is not installed incorrectly. •The shelves are incorrectly installed.	• Make sure the cooler is on a level surface. • Clean the door gasket. • Make sure the door gasket is properly installed. • Make sure to correctly install the shelves.

Specifications

DESCRIPTION OF PRODUCT	Single Zone Built-In Wine Refrigerator
MODEL	AWC540SZ
VOLTAGE / FREQUENCY	AC 115 / 60 Hz
AMPERAGE	1.8 A
INPUT POWER	130W
COLOR	Black Cabinet with Stainless Steel Door
STORAGE CAPACITY	54 Bottles
REFRIGERANT	R134a, 1.8 oz.
TEMPERATURE RANGE	40 to 65 F°
DIMENSIONS (HEIGHT X WIDTH X DEPTH)	33.8” x 23.4” x 22.4”
WEIGHT	110.2 pounds

NOTE: Technical data and performance information is provided for reference only.

Specifications are subject to change. Check the rating label on the wine refrigerator for the most accurate information.

*Note on wine storage capacity:
The wine refrigerator will store 54 standard 750 ml. wine bottles.

Avallon Product Warranty

Warranty Period	Koldfront will be responsible for:	Consumer will be responsible for:
1st year	All costs for repairing or replacing parts and/or unit which proves to be defective. All transportation costs in the first 90 days.	All transportation costs after 90 days.
Limited 2nd-5th year (compressor only)	Repairing or replacing any compressor which proves to be defective. (Labor not included)	Labor and all transportation costs.

This product is warranted by Avallon and is subject to any conditions set forth as follows:

WHAT IS COVERED:

One Year Parts and Labor: For one year from the date of original retail purchase, Avallon will repair or replace any part free of charge including labor that fails due to a defect in materials or workmanship. Avallon will be responsible for all transportation costs for the first 90 days from original purchase date, after 90 days the consumer will be responsible. Labor will be performed free of charge at an authorized Avallon repair facility and will supply new, rebuilt, or refurbished parts free of charge. Avallon may request a defective part be returned in exchange for the replacement part. After the 12 month period, Avallon will no longer be responsible for labor charges incurred or replacement parts. All defective products and parts covered by this warranty will be repaired or replaced on a mail-in basis to an Avallon authorized repair facility.

Five Year Limited Warranty (Compressor– Labor Not Included): In the second through fifth year from the date of original retail purchase, Avallon will replace the compressor free of charge. The consumer will be responsible for all transportation and labor costs. Avallon will supply a new, rebuilt, or refurbished compressor and may request for the defective compressor to be returned in exchange. This limited 5-Year warranty is for the compressor only and does not include labor.

All warranties apply to the original purchaser only, and only covers defects in workmanship experienced during operation of the product under normal service, maintenance, and usage conditions. This warranty applies to the purchase and use of this product in residential settings within the United States of America. All products and parts replaced by Avallon under warranty service become the property of Avallon. All defective products and parts covered by this warranty will be repaired or replaced on a mail-in basis to an Avallon authorized repair facility.

Exceptions: Commercial or Rental Use Warranty: 90 days labor and parts from date of original purchase. No other warranty applies.

WHAT IS NOT COVERED- The following limitations apply to the coverage of this warranty. This warranty does not cover:

Labor charges for installation, setup or training to use the product. Shipping damage, and any damage caused by improper packaging for shipment to an authorized service center, and any damaged caused by improper voltage or any other misuse, including abnormal service, handling, or usage. Cosmetic damage such as scratches and dents. Normal wear and tear on parts or replacement of parts designed to be replaced, e.g. filters, cartridges, batteries. Service trips to deliver, pick-up, or repair, install the product, or to instruct in proper usage of the product. Damages or operating problems resulting from misuse, abuse, operation outside environmental specifications, uses contrary to instructions provided in the owner's manual, accidents, acts of God, vermin, fire, flood, improper installation, unauthorized service, maintenance negligence, unauthorized installation or modification, or commercial use. Labor, service transportation, and shipping charges for the removal and replacement of defective parts, beyond the initial 12 month period. Products that have been modified to perform outside of specifications without the prior written permission of Avallon. Products lost in shipment, or theft. Products sold AS IS or from an unauthorized reseller. Products that have had their serial numbers removed, defaced, or with serial numbers that have been invalidated. Damage from other than normal household use. Replacement or repair of household fuses, circuit breakers, wiring or plumbing. Damage to personal property from use of product. Damage from service other than from an authorized Avallon-repair facility. Hoses, knobs, lint trays and all attachments, accessories and disposable parts. Any service charges not specifically identified as normal such as normal service area or hours. Any special or consequential damages arising out of the use of the product.

OBTAINING WARRANTY SERVICE: If you believe your product is defective, contact Avallon Customer Support for troubleshooting assistance and warranty service at www.avallon.com or call 1-866-471-7427. Before contacting Customer Support you are required to have your model number, serial number and proof of purchase available upon request. Once an Avallon authorized representative has confirmed that your product is defective and eligible for warranty service, the product must be returned to an Avallon authorized repair facility. Avallon is not responsible for damage resulting from shipper mishandling or improper packaging. Do not return a defective product to the place of purchase. Products received without a return authorization number will be refused.

THIS WARRANTY IS IN LIEU OF ANY OTHER WARRANTY, EXPRESS OR IMPLIED, INCLUDING WITHOUT LIMITATION, ANY WARRANTY OF MERCHANTABILITY OR FITNESS FOR A PARTICULAR PURPOSE. TO THE EXTENT ANY IMPLIED WARRANTY IS REQUIRED BY LAW, IT IS LIMITED IN DURATION TO THE EXPRESS WARRANTY PERIOD ABOVE. NEITHER THE MANUFACTURER NOR ITS DISTRIBUTORS SHALL BE LIABLE FOR ANY INCIDENTAL, CONSEQUENTIAL, INDIRECT, SPECIAL, OR PUNITIVE DAMAGES OF ANY NATURE, INCLUDING WITHOUT LIMITATION, LOST REVENUES OR PROFITS, OR ANY OTHER DAMAGE WHETHER BASED IN CONTRACT, TORT, OR OTHERWISE. SOME STATES DO NOT ALLOW THE EXCLUSION OF INCIDENTAL OR CONSEQUENTIAL DAMAGES, SO THE ABOVE EXCLUSION MAY NOT APPLY TO YOU. THIS WARRANTY GIVES YOU SPECIFIC LEGAL RIGHTS. YOU MAY HAVE OTHER RIGHTS THAT VARY FROM STATE TO STATE.



AVALLON GLOBAL, LLC
3736 Bee Cave Rd.
STE 1 #188
West Lake Hills, TX 78746

Toll Free: 1-866-471-7427
Web: http://www.avallon.com
E-mail: service@avallon.com

Product contents and specifications may change without notice.

Copyright © 2013 Avallon Gobal, LLC