NORCOLD

900 Series Refrigerators

Operator's Guide for Models:

962 963
982 983

FOR YOUR SAFETY

If you smell gas:

1. **Open windows**
2. **Do not touch any electrical switches**
3. **Extinguish any open flame**
4. **Immediately call your gas supplier**

FOR YOUR SAFETY

Do not store or use gasoline or other flammable vapors and liquid in the vicinity of this or any other appliance. Vapors can flash back and ignite liquids.

⚠ WARNING

Improper installation, adjustment, alteration, service, or maintenance can cause injury or property damage. Read this manual. For assistance or additional information consult a qualified installer, service agency, or the gas supplier.

NORCOLD
P O BOX 4248
SIDNEY OH 45365-4248

618212E (02-98

Table of Contents

Requirements

Electrical and LP Gas 1

Safety Awareness 2

Introduction 3

About Your Refrigerator

Storage Volume 4

Leveling 4

Freezer Compartment 4

Fresh Food Compartment 4

Crispers 4

Moisture Reduction Heater 4

Defrosting and Cleaning 4

Interior Light 5

Door Handle 5

Door Bins and Bin Slide 6

Checking Door Seal 6

Door Alarm 7

Adjustable Shelves 7

Operating Controls

Operating Instructions 7

Auto Mode 8

Manual Mode 8

Backup Operating System 8

Diagnostics

Diagnostic Codes 9

Diagnostic Codes and Their Meanings 9

Refrigerator Failure 10

Maintenance

Maintenance Requirements 10

Refrigerator Storage 11

Refrigerator Removal/Replacement 11

Burner Flame Inspection 11

Cleaning the Cooling System Flue 11

Burner Orifice Removal & Cleaning 12

Fuse Replacement 13

Replacement Parts 14

Wiring Pictorials 14

Warranty 15

Requirements

Electrical and LP Gas Requirements

This refrigerator is designed to operate with the following energy sources:

LP Gas Operation	11 inches Water Column Propane 12 volts DC control voltage (15.4 volts max. - 10.5 volts min.)
AC Operation	120 volts AC (132 volts max. - 108 volts min) 12 volts DC control voltage (15.4 volts max. - 10.5 volts min.)
DC Operation	12 volts DC (15.4 volts max. - 11.5 volts min.)

Operating where these specifications are exceeded can damage the refrigerator's electrical circuit and its related components and will void the refrigerator's warranty.

Read this manual carefully and become thoroughly acquainted with its contents before installing and operating this refrigerator

NOTICE: THIS APPLIANCE IS NOT APPROVED FOR USE AS A FREE-STANDING REFRIGERATOR OR FOR MARINE APPLICATIONS. THIS APPLIANCE IS EQUIPPED FOR LP GAS AND CANNOT BE CONVERTED TO ANY OTHER FUELS (NATURAL GAS, BUTANE, ETC.).

Be alert to a potential Safety Hazard when the Safety Alert Symbol ⚠ appears on your refrigerator or in this manual. Also, be alert to the shaded areas in this manual; they contain important safety and performance information.

A signal word (i.e., Danger, Warning, Caution) accompanying the Safety Alert Symbol identifies the severity of the Safety Hazard. Review the safety symbols and signal words below. Carefully read their descriptions to understand their meaning. They are for your safety.

⚠ **WARNING** ***indicates the presence of a hazard that can cause severe personal injury, death, or substantial property damage if ignored.***

⚠ **CAUTION** ***indicates the presence of a hazard that will or can cause a minor personal injury or substantial property damage if ignored.***

Always apply the following safety precautions when operating this refrigerator. Failure to heed these precautions can result in substantial property damage, severe personal injury, or death.

- Do not store or use gasoline, flammable vapors, or flammable liquids in the vicinity of this refrigerator. Do not store combustible materials at the rear of the refrigerator. They create a safety hazard and they also inhibit the air flow reducing cooling efficiency.

If you smell gas:

1. Extinguish any open flames, pilot lights, and all smoking materials.
2. Do not touch electrical switches.
3. Shut off the gas supply at the main tank valve(s) or gas supply connection.
4. Open doors and windows.
5. Leave the area until the odor clears.
6. Have the gas system checked and the leakage source corrected before using again.

- Improper installation, adjustment, alteration, unauthorized or improper servicing and maintenance of this refrigerator can cause severe personal injury, property damage, or both. All required service and maintenance must be performed by your dealer or by a Norcold authorized service center.
- Propane gas can cause an explosion that can result in property damage, personal injury, or death. Use extreme care when working with or near a propane gas system. Do not smoke or create sparks. Do not use an open flame to check supply piping and fittings for leaks.
- Ground the 120 volt AC circuit in compliance with any applicable local, state, or national codes. Never cut or remove the round grounding prong from the refrigerator's AC power cord. Do not use a two-prong adapter. Do not use an extension cord.
- Always replace a blown fuse with a fuse of the same ampere rating. A circuit overload can result in an electrical fire if undersized wires or improperly sized fuses are used. To prevent a possible electrical fire, follow Norcold's wire and fuse size requirements (page 6 of "Installation Requirements") and any applicable state, local, or national codes.
- Protect all wiring from physical damage, vibration, and excessive heat.

Safety Awareness

- Always disconnect both the AC and DC power sources from the refrigerator when performing routine maintenance. All servicing of this refrigerator **must** be performed by a qualified service technician.
- Keep liquids away from electrical connections. Many liquids are electrically conductive and could cause serious arcing damage and fires.
- Refrigerator's cooling system contents under pressure. Leaking cooling system contents can cause severe burns to eyes and skin, and can ignite and burn with an intense flame. The cooling system contains sodium chromate. Inhalation of certain chromium compounds can cause cancer. Do not to repair or to recharge a defective cooling unit. Do not bend, drop, drill, weld, manipulate, or hammer the refrigerator's cooling system.
- Improper refrigerant flow or cooling system blockage can cause severe personal injury, substantial property damage, or irreparable damage to the cooling system. Do not leave refrigerator unattended for than one (1) hour after initial start-up. If no cooling is observed in the freezer compartment within one (1) hour of initial start-up, turn refrigerator OFF and contact your dealer or an authorized Norcold Service Center for corrective action.
- Operating refrigerator outside of the cooling system specifications of 3 degrees off level side-to-side and 6 degrees off level front-to-back can cause irreparable damage to cooling system and can create a risk for personal injury or property damage. Level vehicle before operating refrigerator.
- Never attempt to repair or recharge the refrigerant system. A defective refrigerant system must be replaced by a qualified RV appliance repair technician.
- After the refrigerator is in operation, do not touch the cold surfaces of the freezer, particularly with damp or wet hands. Skin may adhere to the cold surfaces.
- Do not place fingers or hands near the ice cube ejector or heating element while the refrigerator is operating on AC electric (Ice Maker equipped refrigerators only).
- This refrigerator has sharp edges and corners at the rear. Use care when working on this refrigerator. To prevent cuts or abrasions, wear cut resistant gloves.
- Surfaces at the rear of the refrigerator are extremely hot. Contact with these surfaces can result in minor burns. Turn the refrigerator off for several hours before attempting to move or service the refrigerator.
- To prevent child entrapment, limit access to the refrigerator and insure all wire shelf retainers are securely fastened. Always remove the door(s) before disposing of any refrigerator.

Introduction

Welcome to the new age of Norcold.

Your refrigerator has been designed to provide the ultimate in cooling satisfaction and will serve you reliably for years to come. Norcold refrigerators are the only RV refrigerators manufactured in America, and your 900 series refrigerator is the only RV refrigerator to offer a standard limited two-year warranty. Norcold also offers an additional warranty coverage (2+3 Plan) which extends the standard limited two-year warranty an additional three years for a total of five years protection. See details provided in your information packet on how to obtain the benefits of the 2+3 Plan.

Norcold is committed to providing products that are in harmony with the environment. Your new Norcold meets all environmental safety standards.

If a problem occurs with your refrigerator, please refer to the "Diagnostic Codes and Their Meanings" in this manual. This section describes the alphanumeric read out of the operating controls. These read out will assist you in diagnosing minor problems if and when they occur. If a problem arises that is not addressed in the "Diagnostic Codes and Their Meanings" of this manual, contact any of the 700 service centers throughout the United States and Canada for assistance. Booklets containing the service center locations are supplied with your refrigerator.

Help Us Help You. Record the refrigerator's model and serial number. You will find these numbers on the serial plate located in the refrigerator. Use these numbers when receiving service or in any correspondence concerning your refrigerator.

Model Number:_____ Serial Number:_____

This appliance is designed for storage of foods, storage of frozen foods, and making ice.

Storage Volume

Models - 962, 963 = 6.3 cu. ft. Models - 982, 983 = 7.5 cu. ft.

Leveling

⚠ ***Warning: Operating refrigerator outside of the cooling system specification of 3 degrees off level side-to-side and 6 degrees off level front-to-back can cause irreparable damage to cooling system and can create a risk for personal injury and property damage. Level vehicle before operating refrigerator.***

Comfortable vehicle leveling is well within the refrigerator's operating requirements of 3 degrees off level side-to-side and 6 degrees off level front-to-back (looking at the front of the refrigerator). Continued operation outside of these limits can result in irreparable damage to the cooling system.

Freezer Compartment

The freezer compartment is not intended for quick freezing of foods; it retains food in a frozen state. The recessed bottom helps to prevent the escape of cold air when the freezer door is opened. The freezer shelf can be adjusted or removed to meet your storage needs.

Fresh Food Compartment

The fresh food compartment stores and cools food.

For best cooling performance, air must be free to circulate within the fresh food compartment. *Do not cover the shelves with paper, plastic, etc.*

To reduce frost formation on the cooling fins, cover liquids and moist foods, do not place hot foods in the compartment, and do not leave the door open longer than needed.

Allow the refrigerator to cool for 8 hours before loading foods. Loading a warm refrigerator with warm food increases the cool down period.

Defrosting and Cleaning the Refrigerator Interior

Your refrigerator is not frost free and will require periodic defrosting. To defrost, turn the refrigerator off. Empty the freezer and the fresh food compartments. Placing a pan of hot water in the freezer will reduce the defrosting time. Leave the drip tray under the cooling fins. After frost has melted, empty the drip tray and clean the refrigerator.

Add a small quantity of mild dish detergent to lukewarm water and wash the interior of the refrigerator. ***Do not use abrasive cleansers; they can damage the interior surfaces of the refrigerator***. Rinsing both compartments in a solution of baking soda and water (one table spoon of baking soda to one quart of water) will freshen the interiors and neutralize odors. Wipe the interior with a soft dry cloth to prevent water spots. Clean the door gaskets in the same manner as the refrigerator interior. This will help to prolong the life of the gaskets.

Crispers

The crispers, located in the bottom of the fresh food compartment, provide storage to preserve fruit and vegetable freshness. Wrap vegetables with strong odors so that their odor will not be transmitted to other foods. Always insure the crispers are pushed in all the way. **Important!** ***The crispers are not dishwasher safe.***

Moisture Reduction Heater

Your refrigerator is equipped with a heater that prevents moisture from forming on the center divider between the freezer and fresh food compartment doors. This heater is activated and deactivated when the refrigerator is turned "On" and "Off".

⚠ *Caution: Do not replace with a bulb of higher wattage. Higher wattage bulbs can damage the interior surface of the fresh food compartment.*

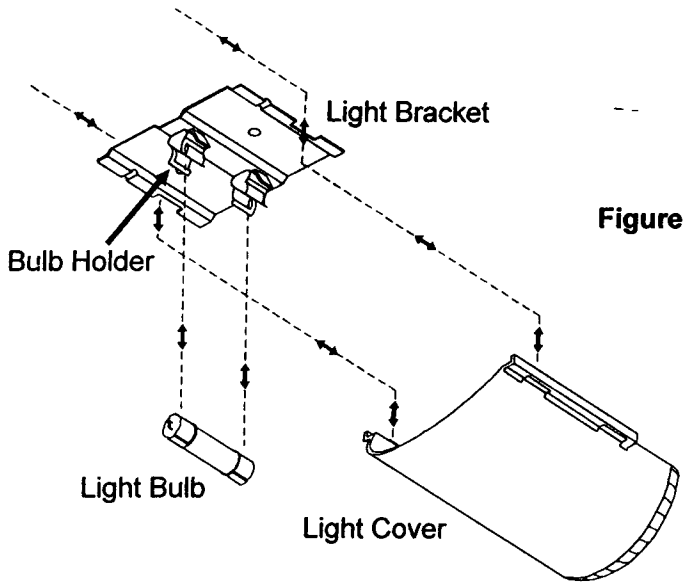

Figure 1

Interior Light

The interior light is located at the top of the fresh food compartment. The light will turn on when the fresh food compartment door is opened and off when the door is closed. Power to the light is activated when the refrigerator is turned on and deactivated when the refrigerator is turned off.

To replace the light bulb, disconnect the 12 volt DC from the rear of the refrigerator. Remove the light cover by sliding it towards the rear of the fresh food compartment. Remove the bulb from the light bracket. Replace the bulb with a GE #214-2 bulb (use **only** the recommended replacement bulb), which can be purchased from most retail automotive centers. Re-install light cover. Reconnect 12 volt DC.

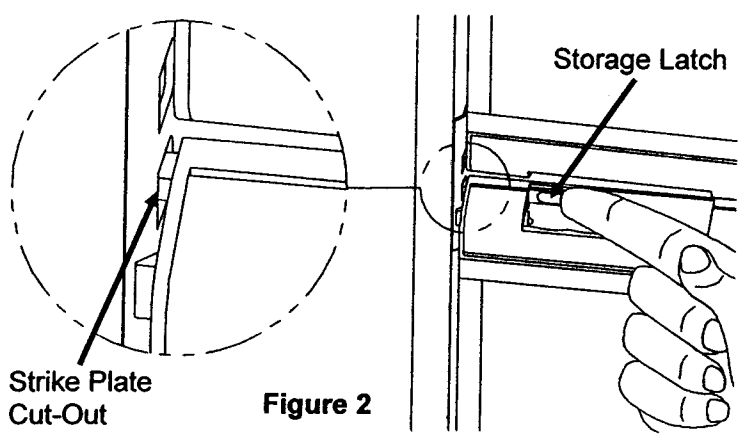

Figure 2

Door Handle

The refrigerator door handles incorporate a latch which insures complete closure of the doors.

The handle is equipped with a storage latch which enables the doors to be left partially open to prevent build-up of odor during extended refrigerator shut-down periods.

Do not use storage latch as a travel latch. Using storage latch as a travel latch allows doors to be partially open.

To use the storage latch, open the door approximately 1/2 inch and slide the storage latch into the cut-out on the strike plate.

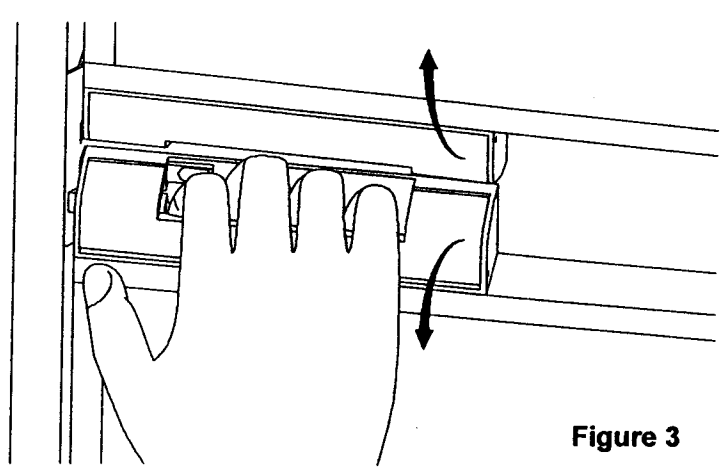

Figure 3

To open the door, rotate the handle away from the refrigerator. When closing, push the door closed until an audible click heard, indicating the door is latched.

Door Bins

The full width door bins in the freezer and fresh food compartments can be positioned to satisfy your needs. The lower bin accommodates items such as 2-liter bottles and half-gallon milk cartons. Other bins accommodate pop cans, ketchup bottles, and other commonly used items. To remove the bins for cleaning or relocating, lift them over their locator and pull them forward. To reinstall, slide the bin firmly onto the locator.

⚠ ***Caution: The bins and bin slides are not dishwasher safe.***

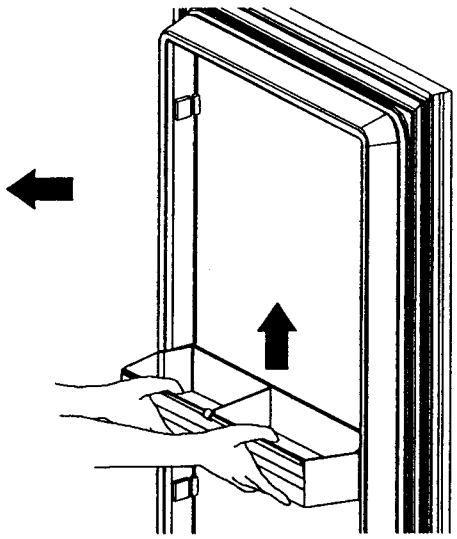

Figure 4

Door Bin Slide

Each bin includes an adjustable bin slide to prevent bin contents from moving or overturning while in transit. Push the slide against the bin contents until they are secure.

To remove the door bin slide, rotate it out of the door bin as illustrated. To reinstall, reverse this procedure.

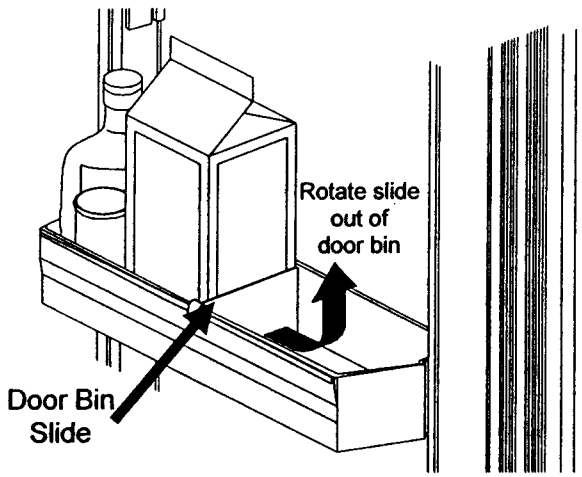

Figure 5

Checking Door Seals

To insure cooling efficiency and to prevent frost formation, the door gaskets must seal completely.

To check for proper door seal, lay a strip of paper between the gasket and the refrigerator. Close the door and withdraw the paper. A frictional drag should be noticed. Repeat all around the door. If the paper does not have a noticeable drag, the gasket is not sealing. Contact your dealer or a Norcold service center for corrective procedures.

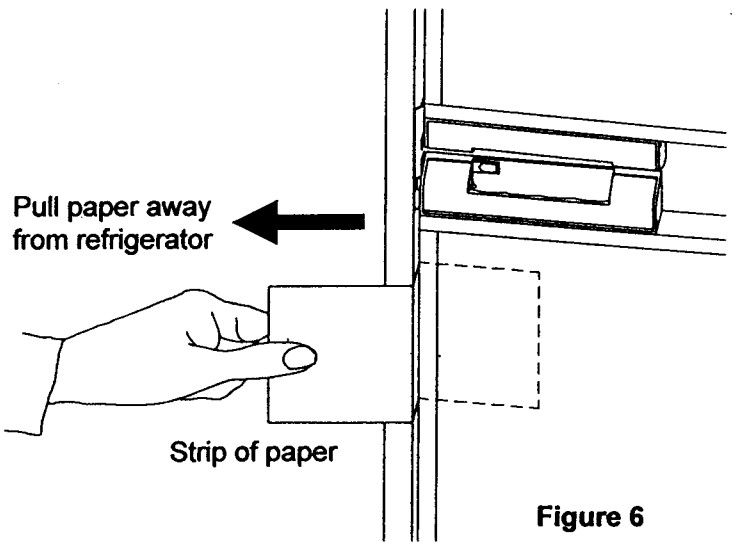

Figure 6

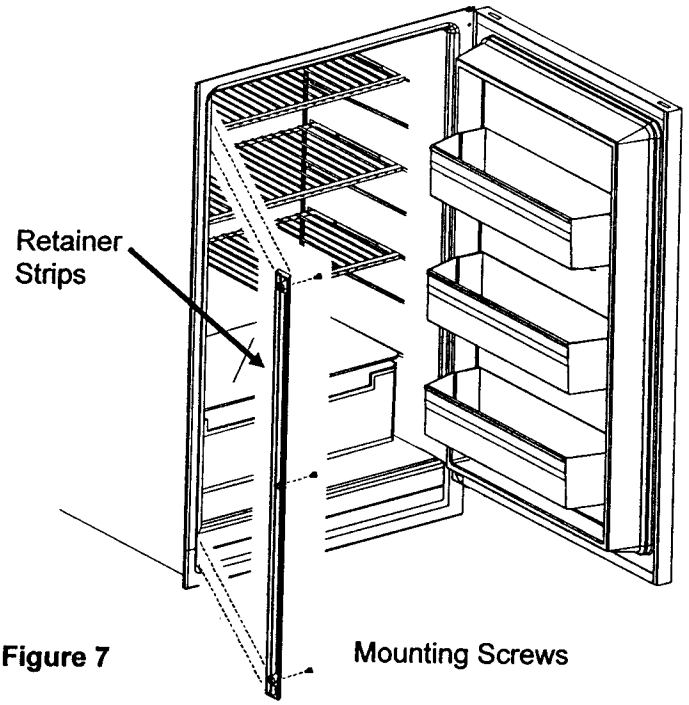

Figure 7

Adjustable Shelves

Multiple shelf grooves in the freezer and fresh food compartments enable you to remove the shelves for cleaning and to arrange the shelves to fit your needs. To move the shelf in the freezer, pull the shelf forward, select the new location, and slide the shelf into place.

To move the shelves in the fresh food compartment; using a Phillips screwdriver, remove the three screws from each retainer. Lift and pull the retaining strips away from the refrigerator. Pull the shelves forward to remove, select the new location, then slide the shelf into place. Reinstall the retainer strips by reversing the above procedure.

To prevent child entrapment, Insure the shelf retainers are reinstalled and secure. This will also prevent the shelves from shifting during transit.

Door Alarm

If the lower door remains open and the interior light remains on for more than two minutes, the light turns off, a warning beeper sounds, a bell flashes, and code A3 appears in the center display panel. Refrigerator operation will not be interrupted; this alarm is intended to alert you to the fact that the door is ajar. Closing the door will turn off the alarm.

About Your Refrigerator

Refrigerator Controls and Operating Instructions

Warning: Improper refrigerant flow or cooling system blockage can cause severe personal injury, substantial property damage, or irreparable damage to the cooling system. Do not leave refrigerator unattended for more than one (1) hour after initial refrigerator start-up. If no cooling is observed in the freezer compartment within one (1) hour of initial start-p, turn refrigerator OFF and contact your dealer or an authorized Norcold Service Center for corrective action.

A 12 volt DC supply is required to maintain the refrigerator's operating control functions. The refrigerator receives its DC power from the vehicle's 12 volt system; either an auxiliary battery, a converter or engine battery. The 12 VDC system not only supplies power to the refrigerator, but to other DC components in the vehicle.

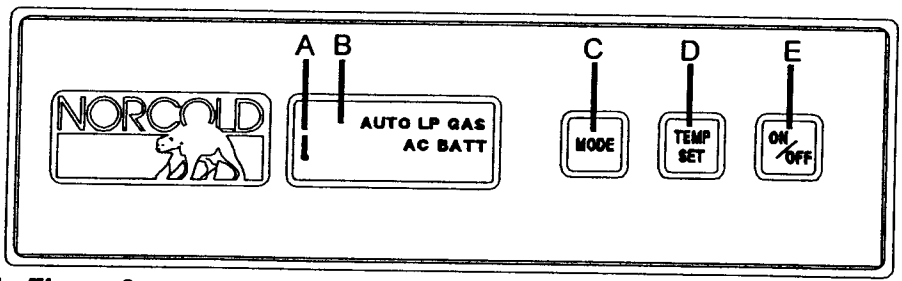

Control Panel - Figure 9

The control panel, positioned between the freezer compartment and the fresh food compartment, conveniently locates all of the functionality needed by the owner. The window (B) of the control panel is equipped with a light which illuminates the LCD display. This light turns on when any button is pressed, and remains on for *10 seconds* after the button is released.

The "On/Off" button (E) turns refrigerator "On" or "Off". When refrigerator is "Off", pressing this button will turn refrigerator "On" and set the mode to "AUTO". When refrigerator is "On", pressing this button for *2 seconds* will turn refrigerator "Off".

Pressing and holding "MODE" button (C) allows the user to cycle through four mode choices; one "AUTO" and three manual modes (AC, LP GAS, or BATT). The refrigerator will not switch to the new operating mode until "MODE" button is released.

The "TEMP SET" (thermostat) button (D) controls refrigerator and freezer temperature during both gas and electric operation, eliminating the need to reset each time a different energy source is selected. Press and hold "TEMP SET" button to select the desired temperature setting. The temperature settings are shown in the form of a thermometer (A) in the display window, with the shortest thermometer reading indicating the coldest setting.

Auto Mode

When "AUTO" mode is selected, the operating control automatically selects the energy source using the following priority scheme:

- When 120 volts AC is available to refrigerator, "AUTO AC" will be visible in the display panel, indicating the refrigerator is operating on AC electric.
- If 120 volts AC is not available, the refrigerator will switch to gas operation, and "AUTO LP GAS" will be visible in the display panel.
- When neither 120 volts AC nor LP gas are available, the refrigerator will switch to DC electric (3-Way models only) and "AUTO BATT" will be visible in the display panel. DC electric operation is not as efficient as LP Gas or AC electric operation, and should therefore be used only to maintain temperatures when other modes are unavailable (for example; while in transit).

During operation in "AUTO" mode, when a higher priority energy source becomes available, the operating controls will cease using the current energy source and will switch to the higher priority energy source. For example, if AC electric becomes available while the refrigerator is operating in the "AUTO LP GAS" mode, the refrigerator will switch to "AUTO AC " operation.

If an operating mode is not functional, a diagnostic code will appear and the refrigerator will attempt to operate in a lower energy priority source. If a lower energy priority source is not available, an alarm will sound and the refrigerator will cease operation. Refer to "Diagnostic Codes and Their Meaning" for corrective actions.

Manual Mode

To operate in "MANUAL" mode, press and hold "MODE" button until "AUTO" disappears and the desired operating mode is displayed. If the energy source is interrupted while operating in the "MANUAL" mode, a diagnostic code will appear, an alarm will sound, and the refrigerator will cease operation. Refer to the "Diagnostic Codes and Their Meaning" on page 10 for corrective actions.

"AUTO" and "MANUAL" Modes - Gas Operation Only

If the gas does not ignite within 30 seconds, which may occur on initial start-up, the refrigerator's gas valve will automatically close and the operating controls will select an alternate energy source ("AUTO" Mode) or, "MANUAL" mode, will revert to a stand-by mode in which an alarm will sound and code A1 will be displayed in the center window. The alarm and code will remain on until the operating controls are turned "OFF" and then "ON" again. If the gas does not ignite after several attempts, check the input gas supply, or consult with your dealer or a Norcold authorized service center. A different mode of operation may be selected by pressing and holding the "MODE" button. The refrigerator will not switch to the new operating mode until the "MODE" button is released.

Backup Operating System ("BOS")

Your refrigerator features a Back-Up Operating System which provides a means for the refrigerator to cool in the event of a failure within the refrigerator's operating controls. In the event this failure occurs, the refrigerator will display Diagnostic Code C5 and will switch automatically to the "BOS" mode. This mode provides refrigeration until the refrigerator is serviced. The fresh food and freezer compartment temperatures should be monitored to prevent over-freezing or thawing of refrigerator contents when operating in the "BOS" mode. If the refrigerator temperature is too cold, adjust the thermostat up (warmer) in one bar increments. If the refrigerator temperature is too warm, adjust the thermostat down (colder) in one bar increments. Allow the refrigerator to operate at the new setting for one hour before rechecking the freezer and fresh food compartment temperatures (frequent door opening prevents the temperatures from stabilizing). While the refrigerator can operate in this mode, Norcold recommends that you seek service as soon as practical to restore normal operation.

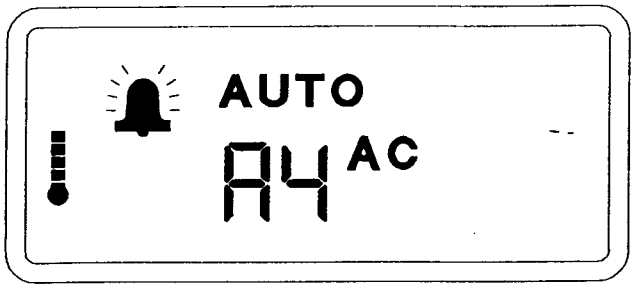

Figure 10

Diagnostic Codes

The refrigerator's operating controls are equipped with a diagnostic system which alerts the user to a problem in any mode of operation. When a problem occurs within a given mode, the operating controls will revert to a stand-by mode in which an alarm will sound and a diagnostic code will be displayed in the center control window. The alarm will sound until an alternate operating mode is selected. ***The diagnostic code will continue to be displayed until the controls are turned "OFF" and then back "ON".*** If a problem occurs, refer to Table 1 "Diagnostic codes and Their Meanings" on page 10.

Table 1
Diagnostic Codes and Their Meaning

Codes	Meanings	Actions
	No display on control panel	Check: 10.5 to 15.4 VDC being supplied to refrigerator? Battery charging equipment or converter DC connection to the refrigerator Refrigerator's DC fuse (3 Amp - Control Fuse) See Page 14 Consult your dealer or a Norcold Service Center
A1	LP gas ignition fault (Initial start-up)	Check: 10.5 to 15.4 VDC being supplied to refrigerator? Have gas lines been purged? LP tank valve on? LP tanks empty? LP supply pressure 11" water column? Refrigerator's manual shut-off valve open? Consult your dealer or a Norcold Service Center
A2	LP gas re-ignition fault (During normal operation)	Check: 10.5 to 15.4 VDC being supplied to refrigerator? LP tank valve on? LP tanks empty? LP supply pressure 11" water column? Consult your dealer or a Norcold Service Center
A3	Door ajar and interior light on for more than two minutes	Closing door will deactivate alarm and remove code
A4	Fault external to refrigerator controls AC Mode selected but AC power not available	Check: Is refrigerator plugged in to a functional AC outlet? Has the vehicle fuse or circuit breaker blown? Vehicle generator functioning (if applicable)? Refrigerator's AC fuse (5 amp) blown? See Page 14 Consult your dealer or a Norcold Service Center
A5	Fault external to refrigerator controls AC input voltage too low	Check: AC input to refrigerator (108 VAC min.) Generator (if applicable) If AC problem cannot be located, consult your dealer, campground administrator, or a Norcold Service Center
A6	Fault external to refrigerator controls AC input voltage too high	Check: AC input to refrigerator (132 VAC max.) Generator (if applicable) If AC problem cannot be located, consult your dealer, campground administrator, or a Norcold Service Center

A7	Fault external to refrigerator controls DC input voltage too low	Check: DC supply to refrigerator (10.5 VDC min.) Battery charging equipment or converter DC connection to the refrigerator Consult your dealer or a Norcold Service Center
A8	Fault external to refrigerator controls DC input voltage too high	Check: Battery(s) supplying DC to refrigerator (15.4 VDC max.) Battery charging equipment or converter DC connection to the refrigerator Consult your dealer or a Norcold Service Center
C1	Fault within refrigerator controls	Not owner serviceable; Consult your dealer or a Norcold Service Center
C2	Fault within refrigerator controls	Not owner serviceable; Consult your dealer or a Norcold Service Center
C3	Fault within refrigerator controls	Not owner serviceable; Consult your dealer or a Norcold Service Center
C4	Fault within refrigerator controls	Not owner serviceable; Consult your dealer or a Norcold Service Center
C5	Fault within refrigerator controls "Back-Up Operating System Mode"	Not owner serviceable Temporary operating mode; read "Back-Up Operating System" - page 9 Seek service as soon as practical Consult your dealer or a Norcold Service Center
C6	Fault within refrigerator controls	Not owner serviceable; Consult your dealer or a Norcold Service Center
C7	Fault within refrigerator controls	Not owner serviceable; Consult your dealer or a Norcold Service Center
C8	Fault within refrigerator controls	Not owner serviceable; Consult your dealer or a Norcold Service Center
C9	Fault within refrigerator controls	Not owner serviceable; Consult your dealer or a Norcold Service Center
D1	Fault within refrigerator controls	Not owner serviceable; Consult your dealer or a Norcold Service Center

Refrigerator Failure

Failure of refrigeration does not necessarily indicate that the cooling system is defective. Other factors governing its operation must be checked.

If a diagnostic code appears, refer to "Diagnostic Codes and Their Meanings" on page 10. If the refrigerator is operating on gas and a loss of cooling is noticed, switch the refrigerator to the AC mode of operation (see Start-Up Instructions on pages 8 and 9). If the refrigerator has been operating on electric, switch to gas operation. After the refrigerator has been switched from one power source to the other allow several hours to assure the refrigerator is cycling properly. This will determine if a component failure in the electric or gas controls is causing the cooling fault. If no cooling is evident after eight hours (or overnight), the cause of failure may be the cooling unit. To determine the actual cause for failure, contact your dealer or a Norcold service center.

Maintenance Requirements

Important Notice:

Read and understand this notice before removing this refrigerator, re-installing this refrigerator, or performing any maintenance on this refrigerator. Norcold <u>will not</u> accept responsibility for installation, adjustment, alteration, service, or maintenance performed by anyone other than a qualified dealer or Norcold service center. Costs or related consequential problems resulting from improper installation, adjustments, alteration, service, or maintenance are the refrigerator owner's responsibility.

1. Leak test gas supply piping and fittings at least once a year. This procedure should only be performed by your dealer or a Norcold service center. These facilities are familiar with gas refrigerators and propane gas systems.
2. Check the main line gas pressure and adjust if necessary. The correct gas pressure is 11 inches water column. It is recommended that your dealer or a Norcold service center perform this task.
3. Clean the refrigerator's burner and burner orifice. This procedure is required once a year minimum and should only be performed by your dealer or a Norcold service center.
4. Insure that the LP gas supply is Propane, not another fuel such as Butane or Butane mixtures. Question the facility in which you purchase your gas.
5. Check the burner flame appearance during gas operation. Inspect burner electrode assembly to insure it is secure to burner bracket.

7. Inspect the flue of refrigerator's cooling system. This area must be free of foreign materials. Foreign materials observed in the flue indicate the burner requires cleaning.
8. Insure the area directly behind the refrigerator is not being used for storage. Keep the refrigerator area clear and free from combustible materials, gasoline, and other flammable vapors and liquids.
9. Periodically inspect the ventilation system. The air passage from the bottom intake vent to refrigerator coils and from the refrigerator coils through the upper exhaust vent must be unobstructed.
10. Inspect combustion seals (visual check without removing the refrigerator). Combustion seals are attached to the back surfaces of the refrigerator's mounting flanges and must be continuous between the wall and the mounting flanges.
11. Periodically inspect door seals.

Refrigerator Storage

When the refrigerator will not be in use for an extended (seasonal) period of time, it is recommended that all power to the refrigerator be disconnected. Unplug the refrigerator's AC power cord from the wall receptacle and disconnect the 12 volt DC supply wires from the refrigerator's power board located at the rear of the refrigerator. Clean the refrigerator interior and latch the doors in the storage position. After the extended shut-down period, the burner, burner orifice, and flue must be inspected before igniting the burner flame. These areas must be free from dust, spider webs, or other obstructions which might restrict the combustion system.

Refrigerator Removal and Replacement

To remove the refrigerator, disconnect both AC and DC power sources from the refrigerator. Turn off the propane gas at the main supply tank. Turn the refrigerator's manual shut-off valve. Disconnect the gas supply piping at the manual shut-off valve. Remove the mounting screws securing the refrigerator to the enclosure. Remove refrigerator from the enclosure.

Before reinstalling the refrigerator, inspect the areas behind the mounting flanges for damaged or missing seal strips. These seal strips serve as a combustion seal which isolates the living space of the vehicle from refrigerator's combustion system. Reinstall the refrigerator by reversing the above procedures. After reinstalling the refrigerator, check the gas fitting connections for leaks. **Do not check for leaks with an open flame. Use an approved leak-detection solution.**

Burner Flame Inspection

The efficiency of your refrigerator while operating in the gas mode is dependent upon the correct burner flame. The burner flame provides energy to the refrigerator's cooling system.

The burner flame efficiency is a function of correct input gas supply pressure, air input, and burner and burner orifice cleanliness.

A visual check of the burner flame should be made regularly. The flame should be sharp blue with a stable burning appearance (Figure 11). If there is a constant yellow component observed or if the flame appears erratic or unstable, switch the refrigerator to electric or turn the refrigerator "OFF" and contact a qualified installer, service agency, or gas supplier.

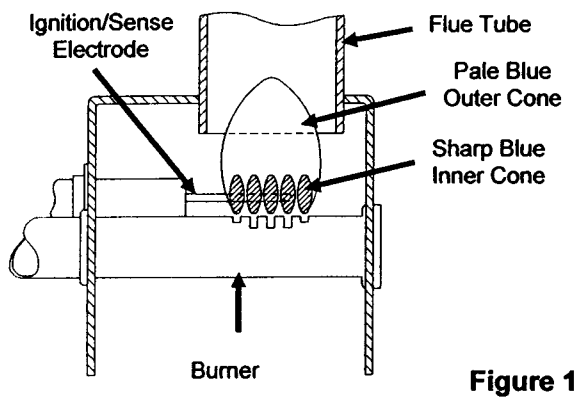

Figure 11

Procedure for Cleaning the Cooling System Flue

⚠ **WARNING** *Carbon Monoxide can be hazardous to your health. Gas appliances may emit excessive Carbon Monoxide if the refrigerator's burner, burner orifice, and the flue tube are not regularly cleaned. To prevent Carbon Monoxide, the burner, burner orifice, and the cooling system's flue tube must be cleaned at least once a year and after all prolonged (seasonal) shut-down periods. Refer to the following cleaning procedures, or contact a qualified installer, your dealer or a Norcold service center.*

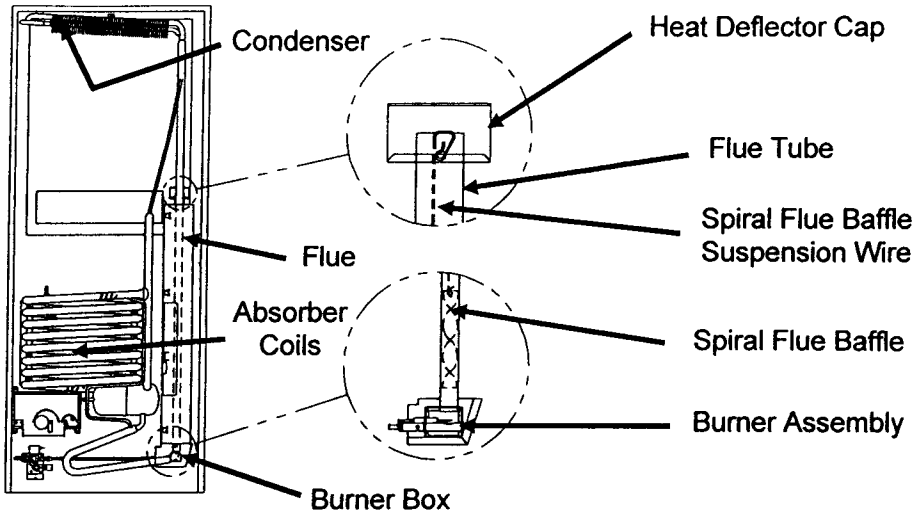

Figure 12

1. Remove the refrigerator from its enclosure. Follow "Refrigerator Removal and Replacement" procedure beginning on page 11.
2. Remove the heat deflector cap from the flue.
3. Remove the spiral flue baffle from the flue tube.
4. Using a stiff brush or fine emery cloth, clean the spiral flue baffle of debris.
5. Clean the inside of the flue tube with a flue brush. ***Inspect burner after cleaning.***
6. Re-install the spiral flue baffle. ***Insure the spiral flue baffle is securely in place. The spiral flue baffle is required for efficient cooling while operating in the gas mode.***

Burner Orifice Removal and Cleaning

Caution: Do not clean the orifice with a pin, drill or similar object.

1. Turn off the gas at the main tank.
2. Turn the refrigerator off.
3. Remove the screws securing the burner cover and burner box to the refrigerator.
4. Loosen the flare nut and remove the burner tube from the orifice. ***To prevent damage to the gas line, use two wrenches when loosening the flare nut.***
5. Carefully remove the gas tube from the burner.
6. Remove the orifice and clean with alcohol and air pressure.
7. Remove the screw securing the burner to the burner bracket. Remove the burner.

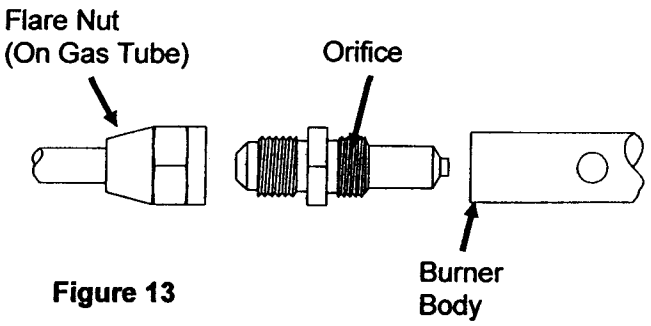

Figure 13

8. Use air pressure to remove dust, spider webs, etc., from inside the burner. Clean the ports of the burner with a brush.
9. Clean and inspect the ignition/sense electrode. Replace if corroded, cracked, or broken.
10. Using air pressure, clean any debris from burner bracket of cooling system.
11. Thread orifice into the burner until finger tight. Tighten 1/4 turn with wrench. Thread flare nut to orifice. Do not cross-thread connections. To prevent damage, use two wrenches when tightening.
12. Leak test all fittings using a soapy water solution. ***Do not use a solution which contains ammonia. Ammonia will attack brass fittings of the burner and gas valve assemblies. Do not leak test fittings with an open flame.***

Fuse Replacement Procedure

The refrigerator's electrical circuits are fused to protect them from a circuit overload. If the "Diagnostic Codes and Their Meaning" section indicates that the refrigerator fuse is blown, follow the replacement procedures below.

1. Turn the refrigerator to "OFF".
2. Disconnect the AC power cord from the wall receptacle.
3. Disconnect the AC power cord from the power board cover at the rear of the refrigerator from the power board cover.
4. Disconnect the 12 volt DC supply wires from the power board cover (A).
5. Remove the ignition wire/sense wire from the power board cover.

⚠ ***CAUTION. Failure to follow this procedure can lead to personal injury or property damage.***

6. Remove the three screws which secure the power board cover to the refrigerator, pull cover away. ***Do not operate refrigerator without power board cover.***
7. For 3-Way models, disconnect the supply wires from the extention board (B) as shown in Figure 8.

   Note! Remember how the wires were removed. Reattach wires to the same location as they were when removed.

   1. Blue wire from power board connects to terminal #7 of extention board.
   2. Red wire from power board connects to terminal #9 of extention board.
   3. Black wire connected to refrigerator chassis connects to terminal #8 of extention board.
   4. Yellow wire of the DC heater connects to terminal #6 of the extention board.

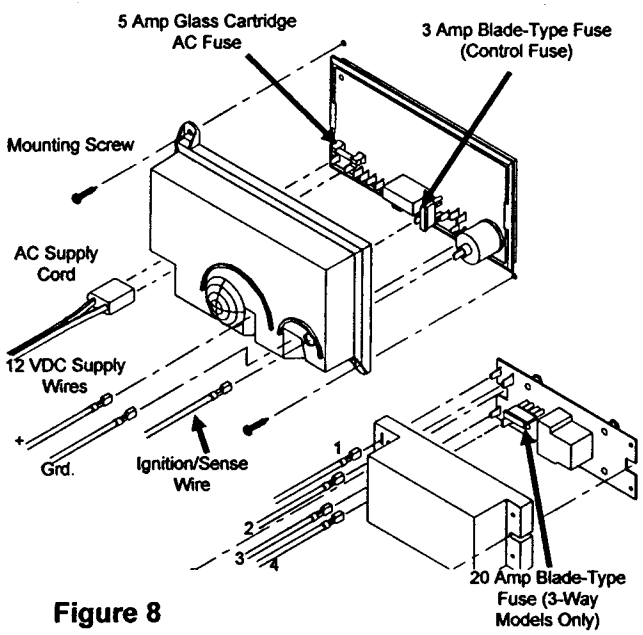

Figure 8

8. Remove the two screws which secures the extention board cover (B) to the refrigerator. Pull cover away from the refrigerator. Do not operate refrigerator without cover.
9. Replace blown fuse with the specified fuse listed in the WARNING above.

⚠ ***WARNING A circuit overload can result in an electrical fire when incorrectly sized fuses are used. To prevent a possible electrical fire, follow the fuse specifications given below:***

DC Control Circuit - 3 amp (purple) blade-type automotive
DC Heater Circuit - 20 amp (yellow) blade-type automotive
AC Circuit - 5 amp glass cartridge

10. If a fuse continues to blow, contact your dealer or a Norcold Service Center for corrective action.

The following items are available at all Norcold Service Centers as replacement parts or additional components.

Item	Part Number	Item	Part Number
Crisper	618154	Freezer Shelf	618172
Small Door Bin	618109	Cut-Out Shelf	618177
Large Door Bin	618103	Ice Cube Tray	61630422
Bin Slide	618166	Interior Light Bulb	GE-#214-2 or Nor. # 61628922
Glass Shelf	618158		
Wire Shelf	618114	Owner's Manual	618212

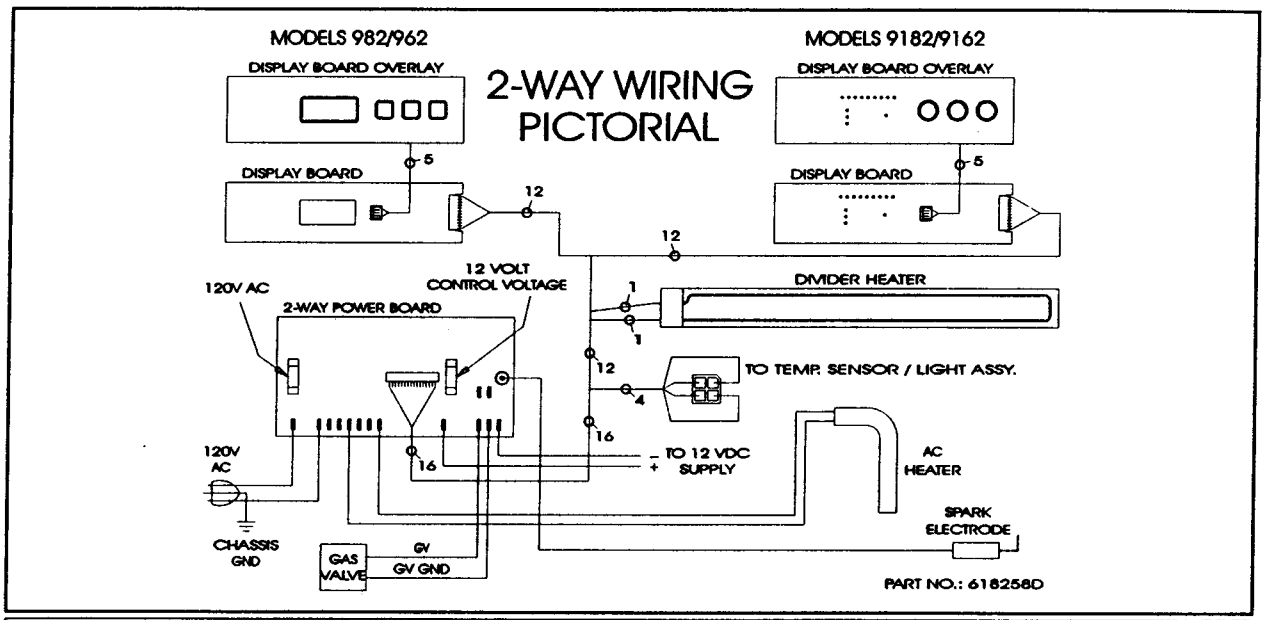

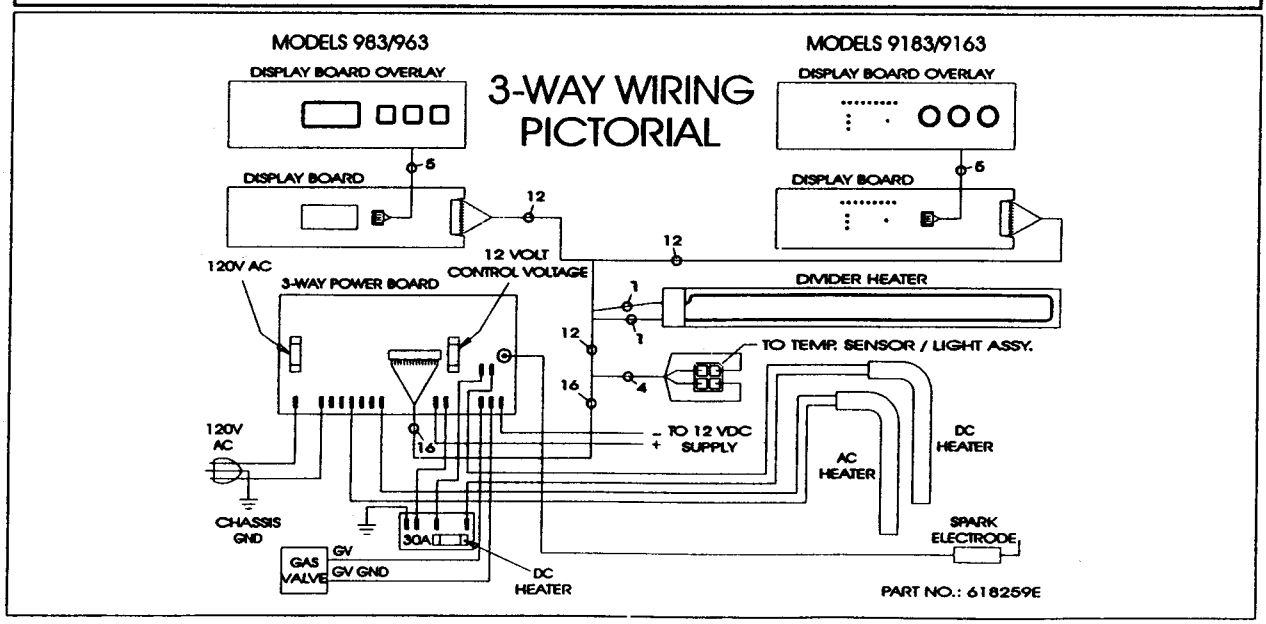

LIMITED TWO YEAR WARRANTY

This Limited Warranty is given by NORCOLD ("Company") to the original consumer-purchaser of any new refrigerating equipment ("Equipment") supplied by the Company, excluding glassware, electric light bulbs, replaceable fuses, and will be effective for a period of two years from date of original purchase. The Company warrants, provided that the Equipment shall at all times have been in possession of and used by the original consumer-purchaser, that:

A. The Company will provide free service and replacement of defective parts at no charge at all authorized Norcold Service Centers for a period of two years from the date of original purchase. This Limited Warranty covers labor costs incurred in removing and re-installing the refrigerator only when necessary to replace a defective part. The Company will pay inbound and outbound transportation costs of any defective part, for a two-year period commencing with date of purchase. The original consumer-purchaser must pay all expenses incurred in making the equipment available at one of the Norcold Service Centers. Any parts replaced under warranty (including cooling units) will be warranted for the duration of the original warranty period.

B. The following procedure shall be followed by an original consumer-purchaser desiring to obtain performance under the terms of this Limited Warranty. The refrigerator must be brought to any of the Norcold Service Centers and the original consumer-purchaser must present evidence (1) to identify the original consumer-purchaser: and (2) that the item claimed to be defective is still within the warranty coverage. If the original consumer-purchaser is unable to accomplish this task, written notice should be immediately directed to Norcold and advice will be promptly given concerning the manner in which warranty service may be obtained. Inability to physically bring the refrigerator to a Norcold Service Center will not void the warranty, but any additional costs thereby incurred are solely for the account of the original consumer-purchaser.

C. The Company will not be liable under this Limited Warranty for any of the following:

(1) Travel expenses for warranty coverage.
(2) Defects which arise by reason of transit damage, misuse, neglect, or accident.
(3) Manufacturing defects found at the time of purchase, parts replaced under warranty, and associated labor, which are not communicated to the Company within 30 days by the original consumer-purchaser.
(4) Labor performed without need for parts replacements which is not communicated to the Company within 30 days by the original consumer-purchaser.
(5) Defects in glassware, electric light bulbs, or replacement of fuses.
(6) Defects arising from improper installation, maintenance, or adjustment of the Equipment.
(7) The need for normal maintenance of this refrigerator according to the guidelines specified in the Operator's and Installation Guide.
(8) Defects arising from the improper use of parts or parts not manufactured or supplied by the Company in the course of repairs or replacements to the Equipment.

D. Employees and agents of the Company, and its authorized service representatives, have no authority to vary the terms of the Limited Warranty, which applies only to Equipment purchased and installed in the United States of America and the Dominion of Canada. The Company reserves the right to make any improvements or changes in parts or models without notice to any original consumer-purchaser.

E. The Company shall not be liable or in any way responsible for any loss or damage to person or property, or lost profits or other similar loss or damage that may result or be claimed to have resulted from a defect in any parts of the Equipment covered by this Limited Warranty. Some states do not allow the exclusion or limitations of any incidental or consequential damages, so the above limitation or exclusion may not apply to you.

F. ANY IMPLIED WARRANTY OF MERCHANTABILITY OR FITNESS FOR A PARTICULAR PURPOSE:

(1) APPLICABLE TO A PART OR PARTS OF THE REFRIGERATOR IS LIMITED TO A PERIOD OF TWO YEARS FROM DATE OF PURCHASE.
(2) SOME STATES DO NOT ALLOW LIMITATIONS ON HOW LONG AN IMPLIED WARRANTY LASTS. THE ABOVE LIMITATIONS MAY NOT APPLY TO YOU.

G. This Warranty gives you specific legal rights. You may also have other rights which vary from state to state.