Vinotemp
INTERNATIONAL
LOS ANGELES, CALIFORNIA, U.S.A.

28-Bottle
Silent Wine Refrigerator

MODEL: VT-28TEDS

INSTRUCTION MANUAL

Please read carefully and follow all safety rules and operating instructions.

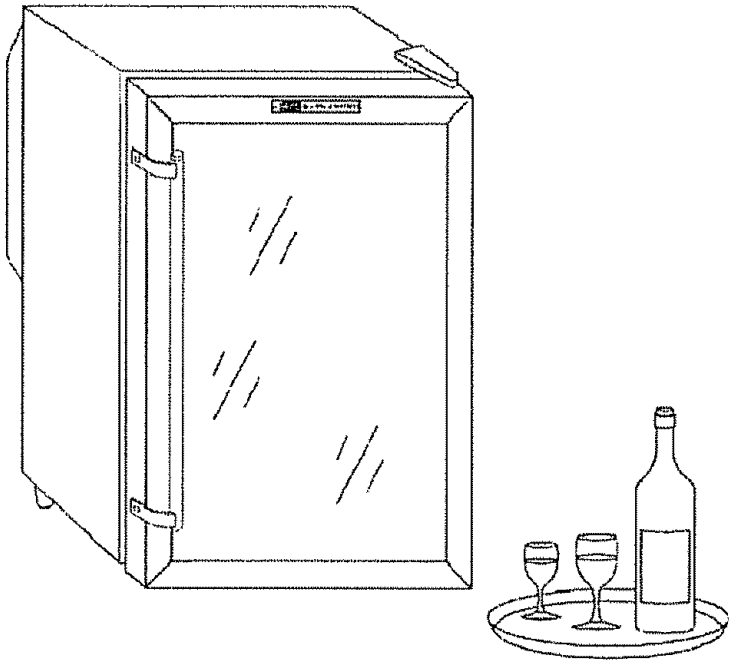

Table of Contents

Structure and Electro Circuit Control Diagram..... page1

Technical Data.....page2

Important Safety Instructions..... page3

Installation Instructions..... page4

Electrical Connection.....page5

Operating your Wine Refrigerator.....page6

Care and Maintenance.....page7

Troubleshooting Guide.....page8

Limited Warranty.....page9

Structure

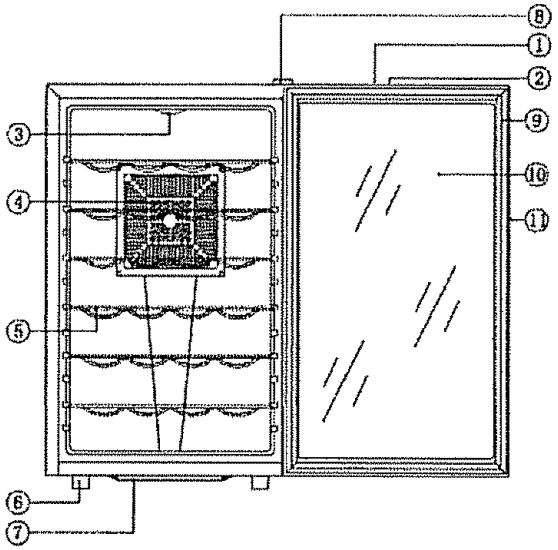

1. TEMPERATURE PCB CONTROL
2. LIGHT SWITCH
3. LIGHT
4. FAN MASK
5. SHELF
6. FOOT
7. WATER BOX
8. REAM COVER
9. MAGNETIC SEAL
10. GLASS
11. DOOR FRAME

Electro circuit Control Diagram

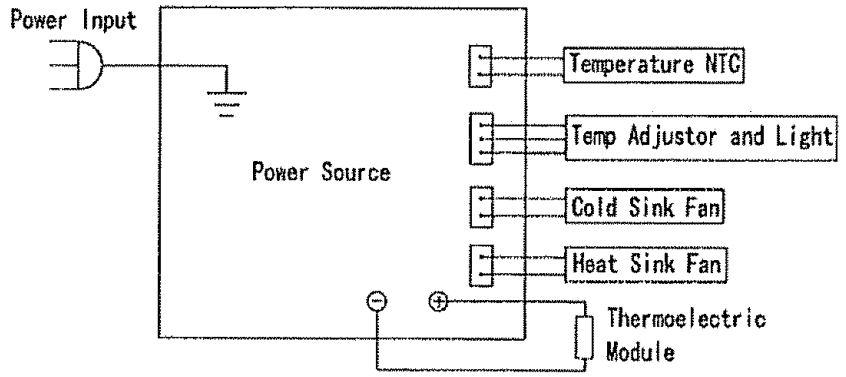

Technical Data

Model no.	VT-28TEDS
Capacity	70L
Voltage	110V
Current	1A(59°F)
Protection Class	I
Frequency	60 Hz
Climate Class	SN ; N
Input Power	70W
Power Consumption KW · h/24h	1.2 (59°F)
Max Temperature Difference	>56°F
Temperature Control Range	54 -66°F
Approx. Net Weight	46.3 Lbs
Approx. Gross Weight	49.4Lbs
Approx. Shape Size (WxHxD) inch	18.1" x 28.9" x21.4"
Approx. Packing Size (WxHxD) inch	19.9" x 30.5" x 22.6"

IMPORTANT SAFETY INSTRUCTIONS

⚡ WARNING ⚡	To reduce the risk of fire, electrical shock, or injury when using your appliance, follow these basic precautions;

- Read all instructions before using the wine refrigerator.
- **DANGER or WARNING**: Risk of child entrapment.
- Child entrapment and suffocation are not problems of the past. Junked or abandoned appliances are still dangerous...even if they will "just sit in the garage a few days."
- **Before you throw away your old wine refrigerator**: Take off the door. Leave the shelves in place so that children may not easily climb inside.
- Never allow children to operate, play with, or crawl inside the appliance.
- Never clean appliance parts with flammable fluids. The fumes can create a fire hazard or explosion.
- Do not store or use gasoline or any other flammable vapors and liquids in the vicinity of this or any other appliance. The fumes can create a fire hazard or explosion.

-Save these instructions-

The wine cooler comes with 1 metal stainless steel handles.

To install simply screw them to the door with the supplied screws

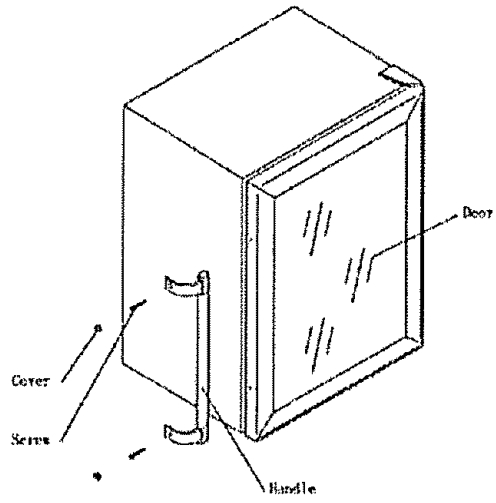

INSTALLING YOUR WINE REFRIGERATOR

- Place your appliance on a floor that is strong enough to support the appliance when it is fully loaded. To level your appliance, adjust the front legs at the bottom of the appliance.
- For recessed installation away from direct sunlight and sources of heat (stove, heater, radiator, etc.). Direct sunlight may affect the acrylic coating and heat sources may increase electrical consumption. Extreme cold or hot ambient temperatures may also cause the appliances not to perform properly.
- Not designed for placement in a garage or basement. Designed for use inside the home.

ELECTRICAL CONNECTION

⚡ Warning ⚡

Improper use of the grounded plug can result in the risk of electrical shock. If the power cord is damaged, have it replaced by an authorized Products service center.

This unit should be properly grounded for your safety. The power cord of this unit is equipped with a 3-pin plug which mates with 3-pin wall outlets to minimize the possibility of electrical shock. Do not under any circumstances cut or remove the ground wire from the power cord supplied.

Use of extension cords is not recommended.

This unit requires a standard 110V~60Hz electrical outlet with 3-pin plug.

The cord should be secured behind the wine refrigerator and not left exposed or dangling to prevent accidental injury.

IMPORTANT SAFEGUARDS

Do not store food in wine refrigerator, as interior temperature may not get cool enough to prevent spoilage.

OPERATING YOUR WINE REFRIGERATOR

It is recommended that you installed the wine refrigerator in a place where the ambient temperature is between 50-80°F . If the ambient temperature is above or below recommended temperatures, the performance of the unit may be affected. For example, placing in extreme cold or hot conditions may cause interior temperature to fluctuate. The range of 54-66°F may not be reached.

The temperatures may fluctuate depending on whether or not the interior light is on or off or whether the bottles are located on the upper/middle or lower section.

How to use the press-buttons on the Display Panel:

You can set the temperature as your desire by the Press-button. There are three press-buttons on the panel "▲" and "▼" to adjust the temperature by 1 °F among 54-66 °F.

You can turn the interior light on or off by pressing "light" button.

CARE AND MAINTENANCE

Cleaning Your Wine Refrigerator

- Unplug the wine refrigerator and remove the bottles.
- Wash the inside with a warm water and baking soda solution. The solution should be about 2 tablespoons of baking soda to a quart of water.
- The outside of the wine refrigerator should be cleaned with mild detergent and warm water.
- Draw out the water box at the bottom, and wash it.

MAINTENANCE OF YOUR WINE REFRIGERATOR

Moving Your Wine Refrigerator

- Remove all the bottles.
- Securely tape down all loose items inside your wine refrigerator.
- Turn the leveling legs up to the base to avoid damage.
- Tape the door.
- Be sure the wine refrigerator stays in the upright position during transportation.

INSTALLATION INSTRUCTIONS

Before Using Your Wine Refrigerator

- Remove the exterior and interior packing.
- Check to be sure the following parts are included:
  - For VT-28TEDS, 6 Slide out shelves.
  - 1 Instruction manual.
- Before connecting the appliance to the power source, let it stand upright for approximately 2 hours. This will reduce the possibility of a malfunction in the cooling system from handling during transportation.
- Clean the interior surface with lukewarm water using a soft cloth.

PROBLEMS WITH YOUR WINE REFRIGERATOR?

You can solve many common wine refrigerator problems easily, saving you the cost of a possible service call. Try the suggestions below to see if you can solve the problem before calling at Vinotemp

TROUBLESHOOTING GUIDE

PROBLEM	POSSIBLE CAUSE
Wine refrigerator does not operate.	Not plugged in using different voltage. The circuit breaker tripped or a blown fuse.
Wine refrigerator is not cold enough.	Check the temperature control setting. External environment may require a higher setting. The door is opened too often. The door is not closed completely. The door seal does not seal properly. The wine refrigerator doesnot have the correct clearances.
The light does not work.	Call the service center.
Vibrations.	Check to assure that the wine refrigerator is level .
The wine refrigerator seems to make too much noise.	The wine refrigerator is not level. Check the fan.
The door will not close properly.	The wine refrigerator is not level. The doors were reversed and not properly installed. The seal is weak. The shelves are out of position.
LED could not display.	Main control board dose not work. The reason of PCB. There is some problem with the plug.
LED display error.	Weak quality of the display. Temperature point is been cut off.
Press-buttons are not functional.	Temperature controller panel is damaged.

Seller assumes no responsibility for the goods sold to the Purchaser. Purchaser assumes all responsibility for delivery, payment of freight, access, measurement, installation, hook-up, moving and storage of the goods.

LIMITED WARRANTY: Seller warrants that the goods will be free of defects in materials and workmanship as follows: 3(three) months from date of sale, removal and re-installation of unit is not included in warranty does not cover damage due to such things as the accident, misuse, abuse, mishandling, neglect, acts of God, fires, earthquakes, fllods, high winds, government, war, riot or labor trouble, strikes, lockouts, delay of carrier, unauthorized repair,or any other cause beyond the control of the Seller, whether similar or dissimilar to the foregoing. This limited warranty applies only inside the Continental US. (Alaska, Puerto Rico and Hawaii are not warranted under the Limited Warranty.)
Purchaser understands and acknowledges that the goods sold here are wine cellars which houses wine Purchaser assumes all risk of using these units, including risk of spoilage, humidity variations, temperature variations, leaks, fire, water damage, mold, mildew, dryness and similar perils that might occur. Unless otherwise provided by applicable law, seller is not responsible for incidental or consequential damages, and there no warranties, expressed or implied, which extend beyond the description on the face hereof; the implied warranties of merchantability and of fitness for a particular purpose are hereby expressly disclaimed. Some states do not allow the exclusion of Incidental or consequential damages, or a waiver of the implied warranties of fitness and/or merchantability, so the above limitations may not apply to you. This warranty gives you specific legal rights and you may also have other rights which vary from state to state.

In the event of any dispute between Seller and Purchaser arising out of or relating to these terms and conditions or to the goods sold generally, Purchaser must first file a written claim with Seller within thirty days of the occurrence giving rise to the claim and wait an additional thirty days for a response before initiating any legal action. Any legal proceeding arising out of or relating to these terms and conditions or to the goods sold generally shall be brought solely in the County of Los Angeles. The prevailing party in any such proceeding is entitled to its attorneys' fees and costs. In no event may Purchaser initiate any legal proceeding more than six months after the occurrence of the event giving rise to the dispute.

The above terms and conditions are the only ones governing this transaction and Seller makes no oral representations of any kind. These Terms and Conditions can only be modified in writing, signed by both Purchaser and Seller.

SERVICE & IMPORTANT NOTICE

Upon receipt and inspection of the unit, if supply cord is damaged, it must be replaced. For any additional information or questions, please contact Vinotemp at info@vinotemp.com

WARNING: Please do not use where children can touch the unit, nor let children use the unit by themselves.