Instructions for use









INDEX

Chapter 1: **INSTALLATION** 4

1.1. INSTALLING SINGLE APPLIANCE 4
1.2. INSTALLING TWO APPLIANCES 4
1.3. ADJUST DOORS (IF AVAILABLE) 4

Chapter 2: **FUNCTIONS** 5

2.1. SMART DISPLAY* 5
2.2. 6TH SENSE FREEZE CONTROL / PROFREEZE FREEZE CONTROL 5
2.3. ON/STAND BY 5
2.4. BLACK OUT ALARM 5
2.5. TEMPERATURE ALARM 5
2.6. DOOR OPEN ALARM 5
2.7. PARTY MODE* 6
2.8. SHOCK FREEZE* 6
2.9. FAST FREEZE* 6
2.10. ECO NIGHT FUNCTION (NIGHT TIME RATE) * 7
2.11. FREEZE CONTROL* 7
2.12. AUTOMATIC NO FROST 7
2.13. ICE MATE* 8
2.14. LED LIGHT SYSTEM* 8

Chapter 3: **USE** 8

3.1. HOW TO INCREASE FREEZER STORAGE CAPACITY 8
3.2. NOTES 8

Chapter 4: **FOOD-STORAGE TIPS** 9

4.1. STORAGE TIME OF FROZEN FOODS 9
4.2. TIPS FOR FREEZING AND STORING FRESH FOOD 10
4.3. USING ICE PACKS* 10
4.4. FROZEN FOOD: SHOPPING TIPS 10

Chapter 5: **FUNCTIONAL SOUNDS** 11

Chapter 6: **RECOMMENDATION IN CASE OF NO USE OF THE APPLIANCE** 12

6.1. ABSENCE / VACATION 12
6.2. MOVING 12
6.3. POWER FAILURE 12

Chapter 7: **MAINTENANCE AND CLEANING** 12

Chapter 8: **TROUBLESHOOTING GUIDE** 13

8.1. BEFORE CONTACTING AFTER-SALES SERVICE… 13
8.2. FAILURES 14

Chapter 9: **AFTER-SALES SERVICE** 14

Others:

REVERSE DOOR SWING (VERSION_1) 15
REVERSE DOOR SWING (VERSION_2) 17
REMOVING/INSERT THE FREEZER INTERIOR 19

NOTE:
The instructions apply to several models, so there may be differences. Sections which only apply to certain appliances are indicated with an asterisk (*).
Functions which are dedicated specially for your already bought model of product you will find in QUICK START GUIDE.

1. INSTALLATION

1.1. INSTALLING SINGLE APPLIANCE

To guarantee adequate ventilation, leave a space on both sides and above the appliance.

The distance between the rear of the appliance and the wall behind the appliance should be at least 50mm.

A reduction of this space will increase the Energy consumption of product.

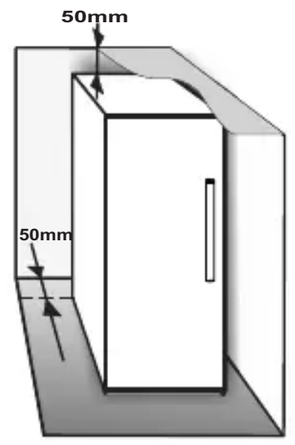

1.2. INSTALLING TWO APPLIANCES

During installing the freezer ① and the fridge ② together ensure that the freezer is located on the left and the fridge on the right (as shown on the drawing). Left side of refrigerator is equipped with special device in order to avoid condensation problems between appliances.

We recommended installing two appliances together using the linking-kit ③ (as shown on the drawing). You can buy it in Service.

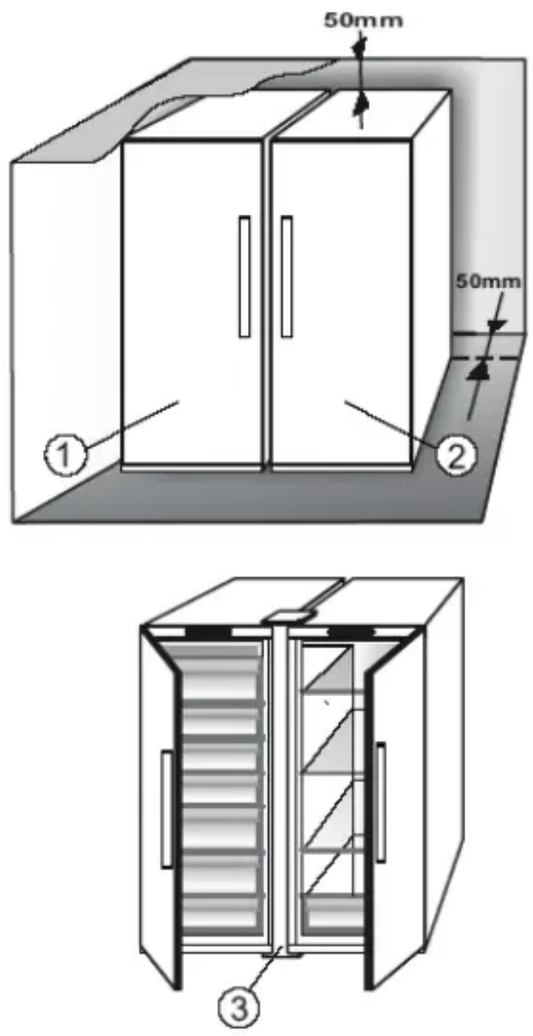

1.3. ADJUST DOORS (IF AVAILABLE)

To level the doors using the adjustable lower hinge (select models)

If the refrigerator door is lower than the freezer door, raise the refrigerator door by turning the adjustment screw counterclockwise using a M10 wrench.

If the freezer door is lower than the refrigerator door, raise the freezer door by turning the adjustment screw counterclockwise using a M10 wrench.

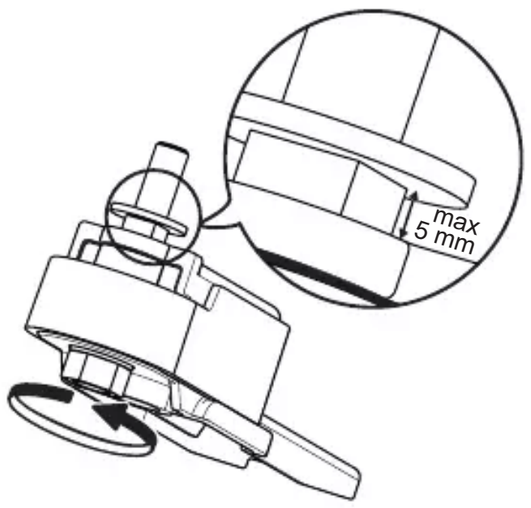

*Available on selected models only. Please check on the QUICK START GUIDE if this function is actually available on your model.

2. FUNCTIONS

2.1. SMART DISPLAY*

This function can be used to save energy. Please follow the instructions contained in the Quick Start Guide to activate/deactivate the function. Two seconds after activation of the Smart Display, the display goes off. To adjust the temperature or use other functions, it is necessary to activate the display by pressing any button. After about 15 seconds without performing any action, the display goes off again. When function is deactivated the normal display is restored. The Smart Display is automatically disabled after a power failure. Remember that this function does not disconnect the appliance from the power supply, but only reduce the energy consumed by external display.

Note: The declared appliance energy consumption refers to operation with the Smart Display function activated. This function is available only on the model with User Interface on the door.

2.2. 6TH SENSE FREEZE CONTROL / PROFREEZE FREEZE CONTROL

The 6th Sense Freeze Control / ProFreeze Freeze Control function works to maintain the right temperature in the following cases:

- Door opened for a while

The function activates when door opening causes the internal temperature to increase to values that do not ensure safe storage of food and remains active until optimal storage conditions have been restored.

- Fresh food stored in the freezer

The function activates when fresh food is placed in the freezer and remains active until optimal freezing conditions are reached so as to ensure the best freezing quality with the lowest power consumption.

Note: Besides the quantity of food loaded into the freezer, ambient temperature and the quantity of food already inside the freezer affect the duration of the 6th Sense Freeze Control / ProFreeze Freeze Control function. Therefore significant duration variations are quite normal.

2.3. ON/STAND BY

This function turns On/Stand-by the freezer compartments. To put the product in Stand-by, press & hold the On/Stand-by button for 3 seconds. When the appliance is in Stand-by, the light inside the freezer compartment does not work. Remember that this operation does not disconnect the appliance from the power supply. To switch the appliance On again, simply press the On/Stand-By button.

2.4. BLACK OUT ALARM

After a power blackout, your product is designed to automatically monitor the temperature in the freezer when electricity is resupplied. If the temperature in the freezer rises above freezing level, the Black Out indicator turns on, the Alarm indicator blinks and the acoustical alarm sounds when electricity is resupplied. To reset the alarm press the Stop Alarm button just once.

In case of Black Out Alarm, the following actions are recommended:

- If the food in the freezer is unfrozen but still cold, all the food in the freezer should be eaten within the next 24 hours.
- If the food in the freezer is frozen, this indicates the food was thawed and then refrozen when electricity was re-supplied which degrades taste, quality and nutritional value and also could be unsafe. It is recommended to not consume the food but to dispose of the entire content of the freezer. The Black Out Alarm is designed to provide guidance on food quality in the freezer in the event of electricity black out. This system does not guarantee food quality or safety and consumers are advised to use their own judgment in evaluating food quality in freezer compartment.

2.5. TEMPERATURE ALARM

The acoustic alarm sounds and temperature indicator (°C) blinks. The alarm is activated when:

- The appliance is connected to the power supply after prolonged disuse
- The freezer compartment temperature is too high
- The quantity of fresh foods loaded into the freezer exceeds that indicated on the rating plate
- The freezer door has been left open for a long time.

To mute the alarm buzzer press Stop Alarm button just once. The Alarm indicator is automatically turned-off as soon as the freezer compartment reaches a temperature below -10°C and the temperature set indicator (°C) stop blinking and shows the chosen setting.

2.6. DOOR OPEN ALARM

The Alarm icon lights up blinking and the acoustic alarm sounds. The alarm is activated when the door is left open for more than 2 minutes. To disengage the door alarm close the door, or press once Stop Alarm button to mute the acoustic alarm.

*Available on selected models only. Please check on the QUICK START GUIDE if this function is actually available on your model.

2.7. PARTY MODE*

Use this function to chill drinks inside the freezer compartment. 30 minutes after selection (the time required to chill a 0.75 l bottle without the glass breaking), the symbol flashes, an acoustic alarm sounds: remove the bottle from the freezer compartment and press the Stop Alarm button to disable the alarm.

Important: do not leave the bottle inside the freezer compartment longer than the time necessary for chilling.

2.8. SHOCK FREEZE*

The "Shock Freeze" compartment is specifically designed to freeze up to 2 kg of fresh food extremely quickly. The ultra-fast "Shock Freeze" function minimizes the formation of ice crystals inside the food as it freezes, thus ensuring it is of the best possible quality when defrosted prior to consumption. When the "Shock Freeze" function is not active, the compartment can be used as normal for traditional freezing or for the storage of already frozen foods.

Note: When the Shock Freeze function is active you may hear a humming sound. This is absolutely normal and is caused by airflow that permits optimum cold distribution inside compartment.

Activating and deactivating the "Shock Freeze" function:

1. Make sure at least 12 hours have passed since the last time the "Shock Freeze" function was activated (if at all). Do not activate the function more frequently than once every 12 hours.
2. Make sure that the "Fast Freeze" function is not active: "Shock Freeze" and "Fast Freeze" functions cannot be active together at the same time.
3. Empty the "Shock Freeze" compartment.
4. Activate the "Shock Freeze" function by briefly touching the button on the control panel: the icon lights up and the fans on the bottom of the compartment come on, increasing the flow of cold air and accelerating the freezing process as a result.
5. Place the food to be frozen inside the compartment, a few centimeters (min. 2 cm) away from the fans on the back of the compartment, so that cold air can circulate.
6. To achieve maximum freezing speed, we recommend not to deactivate the "Shock Freeze" function until its automatic deactivation, keeping closed the door
7. The "Shock Freeze" function is automatically deactivated 4-5 hours after its activation: the indicator switches off and the fans are deactivated. The "Shock Freeze" function may nevertheless be switched off at any time as desired, by briefly pressing the button on the control panel: the indicator switches off and the fans are deactivated.

Attention:

- **Incompatibility with the "Fast Freeze" function**

To guarantee optimal performance, the "Shock Freeze" and "Fast Freeze" functions cannot be used at the same time. Therefore, if the "Fast Freeze" function has been already engaged, it has to be disengaged first to activate the "Shock Freeze" function (and vice-versa).

- **If the fans in the Shock Freeze compartment do not start working**

After the "Shock Freeze" function has been activated, it may happen that the indicator lights up as expected, but the fans do not start working. This is normal and means that freezer defrosting is in progress. At the end of the defrosting phase (maximum duration: 1.5 hours), the fans will automatically start working and the "Shock Freeze" process will begin as normal.

- **If the indicator does not light up**

If, after the button is pressed, the icon lights up: in this case the button has been pressed for too long. To activate the "Shock Freeze" function, first deactivate the Fast Freeze function (holding the button for 3 seconds, then briefly touch the button, without keeping it pressed for more than 1 second.

2.9. FAST FREEZE*

The amount of fresh food (in kg) that can be frozen in 24 hours is indicated on the appliance rating plate.

This function can be used for optimum appliance performance, 24 hours before placing fresh food in the freezer Please follow the instructions contained in the Quick Start Guide to activate/deactivate the function. After placing fresh food in the freezer, 24 hours on Fast Freeze function is generally sufficient; After 50 hours the Fast Freeze function automatically deactivates.

Attention:

In order to save energy, when freezing small amounts of food, the fast freeze function can be deactivated after a few hours.

- **Incompatibility with the "Shock Freeze" function**

To guarantee optimal performance, the "Shock Freeze" and "Fast Freeze" functions cannot be used at the same time. Therefore, if the "Fast Freeze" function has been already engaged, it has to be disengaged first to activate the "Shock Freeze" function (and vice-versa).

*Available on selected models only. Please check on the QUICK START GUIDE if this function is actually available on your model.

2.10. ECO NIGHT FUNCTION (NIGHT TIME RATE) *

The Eco Night function enables appliance energy consumption to be concentrated in the reduced rate hours (generally at night), when electricity is readily available and costs less than during the daytime (only in countries that utilise a time based multi-rate system - check energy rates with the local electricity company). To activate the function, press the button at the reduced rate start time (depending on the specific rates plan). For example, if the reduced rate starts at 8 p.m., press the button at that time. When the Eco Night indicator is ON, the function is ON. Once the function is activated, the appliance automatically adapts energy consumption according to the time selected, i.e. consuming less energy during the day than at night.

IMPORTANT: To operate properly, the function must be on during the night and day. The function remains on until deactivated (or it is deactivated in case of a power failure or appliance switch-off). To deactivate the function, press the button again. When the Eco Night indicator is OFF, the function is OFF.

Note: The declared appliance energy consumption refers to operation with the Eco Night function deactivated.

2.11. FREEZE CONTROL*

Freeze Control is an advanced technology that reduces temperature fluctuations in the whole freezer compartment to minimum, thanks to an innovative air system, totally independent from the fridge. Freeze burns are significantly reduced and food preserves its original quality and color.
To activate the Freeze Control choose the function from the menu, set to >ON< and press OK button to confirm the selection. To deactivate this function repeat the same procedure setting to >OFF<.
The function works properly in a defined range of temperature: between -22°C and -24°C.
When the function is engaged and the current temperature in the freezer is set to the warmer set point than -22°C, the temperature is automatically set to -22°C to match the working range.
If the function is engaged and the user modify the freezer temperature out of the working range, the function is automatically switched off.
In case of Fast freezing is engaged, the function "Freeze control" is inhibited until the Fast Freezing function switched off.

2.12. AUTOMATIC NO FROST

This product is designed to defrost automatically according to conditions of use and ambient humidity
No Frost freezers provide chilled air circulation around the storage areas and prevent the formation of ice, thereby completely eliminating the need for defrosting.
Frozen items don't stick to the walls, labeling stays legible and storage space remains neat and clear.
In combination with the 6th Sense Freeze Control / ProFreeze Freeze Control, not only does it control the sensor, but directs the cooling power exactly where it is needed, optimizing energy efficiency.

*Available on selected models only. Please check on the QUICK START GUIDE if this function is actually available on your model.

2.13. ICE MATE*

HOW TO MAKE ICE CUBES

You can remove the ice cube tray by pulling it towards you.



WARNING: fill with potable water only (maximum level = 2/3 of the overall capacity).

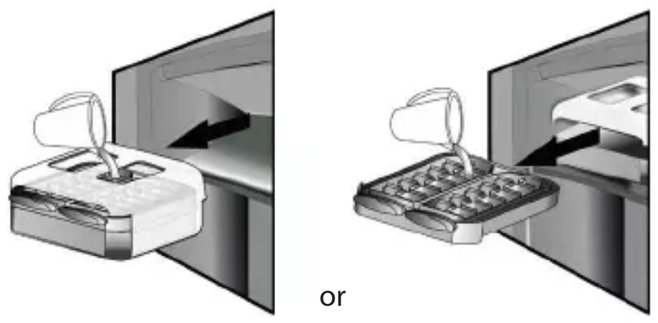

or

Place again the Ice Mate in freezer compartment, or reinsert the ice cube tray within the Ice Mate. Take care not to spill water.



Wait until the ice cubes are formed (it is recommended to wait for about 4 hours).

NOTE: Ice Mate is removable. It can be placed in horizontal position anywhere in the freezer compartment or taken out of the appliance when ice-making is not required.

HOW TO TAKE ICE CUBES

Make sure that the storage bin is in place under the ice tray. If not, slide into place.
Twist one of levers firmly in the clockwise direction until the tray twists slightly. The ice cubes fall into the storage bin.



Repeat Step 2 for the other half of the tray, if necessary.
To get ice, slightly lift up the storage bin and pull it towards you.

NOTE: if you prefer, you can remove the entire Ice Mate from the appliance, to take the ice cubes wherever is convenient for you (for example: directly on the table).

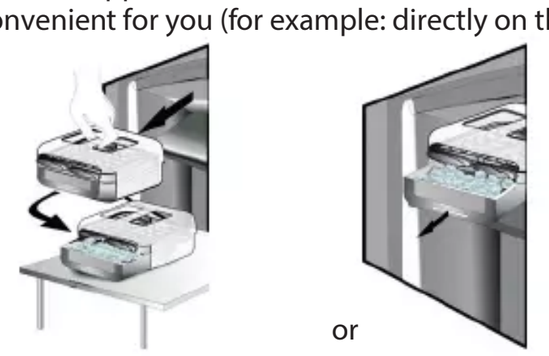

or

2.14. LED LIGHT SYSTEM*

The light system inside the freezer compartment uses LEDs light, allowing a better lightning as well as very low energy consumption. If the LED light system does not work, please contact the Service to replace it.

3. USE

3.1. HOW TO INCREASE FREEZER STORAGE CAPACITY

You can increase storage capacity in the freezer compartment by:

- removing the baskets / flaps* to allow the storage of big products.
- placing the food products directly on the freezer shelves.
- removing the Ice Mate* .
- removing bottle rack*.

3.2. NOTES

- Do not block the air outlet area (on the back wall inside the product) with food products.
- If the freezer is provided with a flap, it is possible to maximize the storage volume by removing the flap.
- All shelves, flaps and pull-out baskets are removable.
- The internal temperatures of the appliance may be affected by the ambient temperature, frequency of door opening, as well as location of the appliance. Temperature setting should take into consideration these factors.
- Unless otherwise specified the appliance accessories are not dishwasher safe.

*Available on selected models only. Please check on the QUICK START GUIDE if this function is actually available on your model.

4. FOOD-STORAGE TIPS

The freezer is the ideal storage location for store frozen food, make ice cubes and freeze fresh food in the freezer compartment.
The maximum number of kilograms of fresh food that can be frozen within a 24-hour period is indicated on the rating plate (…kg/24h).
If you have a little quantity of food to store in the freezer, we recommend to use the coldest areas of your freezer compartment, corresponding to the upper or the middle area, depending on your model (see the product sheet to know which is the area where is suggested to freeze fresh food).

4.1. STORAGE TIME OF FROZEN FOODS

The table shows the recommended storage time for frozen fresh foods.

FOODS	STORAGE TIME (months)
Meat	
Beef	8 – 12
Pork, veal	6 – 9
Lamb	6 – 8
Rabbit	4 – 6
Mince / offal	2 – 3
Sausages	1 – 2
Poultry	
Chicken	5 – 7
Turkey	6
Giblets	2 – 3
Crustaceans	
Molluscs creab, lobster	1 – 2
Creab, lobster	1 – 2
Shellfish	
Oyster, shucked	1 – 2
Fish	
“fatty” (salmon, herring, mackerel)	2 – 3
“lean” (cod, sole)	3 – 4
Stews	
Meat, poultry	2 – 3
Dairy products	
Butter	6
Cheese	3
Double cream	1 – 2
Ice-cream	2 – 3
Eggs	8
Soups and sauces	
Soup	2 – 3
Meat sauce	2 – 3
Pate	1
Ratatouille	8
Pastry and bread	
Bread	1 – 2
Cakes (plain)	4
Gateaux (cakes)	2 – 3
Crepes	1 – 2
Uncooked pastry	2 – 3
Quiche	1 – 2
Pizza	1 – 2

*Available on selected models only. Please check on the QUICK START GUIDE if this function is actually available on your model.

FRUITS AND VEGETABLES

FOODS	STORAGE TIME (months)
Fruits	
Apples	12
Apricots	8
Blackberries	8 – 12
Blackcurrants / Redcurrants	8 – 12
Cherries	10
Peaches	10
Pears	8 – 12
Plum	10
Raspberries	8 – 12
Strawberries	10
Rhubarb	10
Fruit juices (orange, lemon, grapefruit)	4 – 6
Vegetables	8 – 10
Asparagus	6 – 8
Basil	12
Beans	8 – 10
Artichokes	8 – 10
Broccoli	8 – 10
Brussels sprout	8 – 10
Cauliflower	10 – 12
Carrots	6 – 8
Celery	8
Mushrooms (champignons)	6 – 8
Parsley	10 – 12
Peppers	12
Peas	12
Runner-beans	12
Spinach	8 – 10
Tomatoes	8 – 10
Zucchini	

We recommend to label and date all your frozen food. Adding a label will help you to identify foods and to know when they should be used before their quality deteriorates.Do not re-freeze defrosted food.

4.2. TIPS FOR FREEZING AND STORING FRESH FOOD

- Before freezing, wrap and seal fresh food in: aluminium foil, cling film, air and water-tight plastic bags, polythene containers with lids or freezer containers suitable for freezing fresh food.
- Food must be fresh, mature and of prime quality in order to obtain high quality frozen food.
- Fresh vegetables and fruit should preferably be frozen as soon as they are picked to maintain the full original nutritional value, consistency, colour and flavor.

Some meat, especially game, should be hung before it is frozen.

Note:

- Always leave hot food to cool before placing in the freezer.
- Eat fully or partially defrosted foods immediately. Do not refreeze unless the food is cooked after it has thawed. Once cooked, the thawed food can be refrozen.
- Do not freeze bottles with liquid.

4.3. USING ICE PACKS*

Ice packs helps in keeping frozen the foodstuffs in case of power failure. For the best usage of them, place them above food stored in the top of compartment.

4.4. FROZEN FOOD: SHOPPING TIPS

When purchasing frozen food products:

- Ensure that the packaging is not damaged (frozen food in damaged packaging may have deteriorated). If the package is swollen or has damp patches, it may not have been stored under optimal conditions and defrosting may have already begun.
- When shopping, buy frozen foods at the end of your trip and transport them in a thermally insulated cool bag.
- Once at home, place the frozen foods immediately in the freezer.
- If food has defrosted even partially, do not re-freeze it. Consume within 24 hours.
- Avoid or reduce temperature variations to the minimum. Respect the best-before date on the package.
- Always observe the storage information on the package.

5. FUNCTIONAL SOUNDS

Sounds coming from your appliances are normal since it has a number of fans and engines to regulate performances that switch on and off automatically.

Some of the functional sounds can be reduced through

- Leveling the appliance and installing it on an even surface
- Separating and avoiding contact between the appliance and furniture.
- Checking if the internal components are correctly placed.
- Checking if bottles and containers are not in contact with each other.

Some of the functional sounds you might hear:

A hissing sound when switching on the appliance for the first time or after a long pause.



A gurgling sound when refrigerant fluid enters into the pipes.



BRRR sound is from the compressor running.



Buzzing sound when water valve or fan start working.



A cracking sound when compressor starts or when ready ice drops into ice box abrupt clicks when compressor switches on and off.



The CLICK is from the thermostat which adjusts how often the compressor is running.



6. RECOMMENDATION IN CASE OF NO USE OF THE APPLIANCE

6.1. ABSENCE / VACATION

In case longer absence its recommended to use up food and to disconnect the appliance to save energy.

6.2. MOVING

1. Take out all internal parts.
2. Wrap them well, and fix them together with adhesive tape so that they do not bang together or get lost.
3. Screw the adjustable feet so that they do not touch the support surface.
4. Close and fix door with adhesive tape and, again using adhesive tape, fix the power cable to the appliance.

6.3. POWER FAILURE

In the event of a power failure, call the local office of your electricity supply company and ask how long it is going to last.

Note: Bear in mind that a full appliance will stay cold longer than a partially filled one.

If ice crystals are still visible on the food, it may be frozen again, although flavour and aroma may be affected.

If food is found to be in a poor condition, it is best to throw it away.

For power failures lasting up to 24 hours.

1. Keep the door of the appliance closed. This will allow the stored food to stay cold as long as possible.

For power failures lasting more than 24 hours.

1. Empty the freezer compartment and arrange the food in a portable freezer. If this type of freezer is not available and, likewise, no artificial ice packs are available, try to use up the food, which is more easily perishable.
2. Empty the ice tray.

7. MAINTENANCE AND CLEANING

Before any cleaning or maintenance operation, unplug the appliance from the mains or disconnect the electrical power supply.
Periodically clean the appliance with a cloth and a solution of lukewarm water and neutral detergent specifically for refrigerator interiors. Never use abrasives. Never clean refrigerator parts with flammable fluids. The fumes can create a fire hazard or explosion. Clean the outside of the appliance and the door seal with a damp cloth and dry with a soft cloth.

Do not use steam cleaners.
Condenser placed in the rear of the appliance should be cleaned regularly using a vacuum cleaner.

Important:

- The buttons and control panel display must not be cleaned with alcohol or alcohol-derived substances, but with a dry cloth.
- The refrigeration system pipes are located near the defrost pan and can become hot. Periodically clean them with a vacuum cleaner.
- To remove or insert the glass shelf, move up the front part of the shelf to pass the stopper.

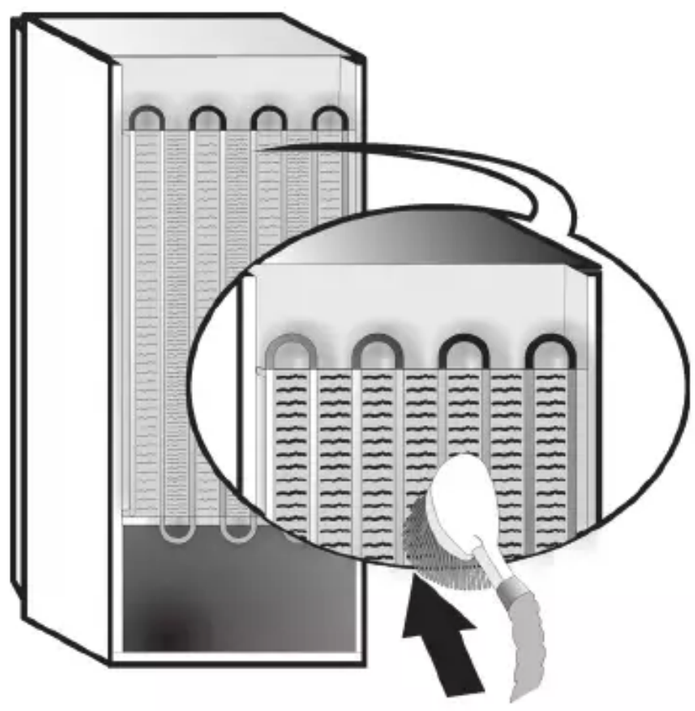

8. TROUBLESHOOTING GUIDE

8.1. BEFORE CONTACTING AFTER-SALES SERVICE...

Performance problems often result from little things you can find and fix yourself without tools of any kind.

PROBLEM	SOLUTION
The appliance is not working:	• Is the power cable plugged into a live socket with the proper voltage? • Have you checked the protection devices and fuses of the electrical system in your home?
If there is water in the defrost pan:	• This is normal in hot, damp weather. The pan can even be half full. Make sure the appliance is level so that the water does not overflow.
If the edges of the appliance cabinet, which come in contact with the door seal, are warm to the touch:	• This is normal in hot weather and when the compressor is running.
If the light does not work:	• Have you checked the protection devices and fuses of the electrical system in your home? • Is the power cable plugged into a live socket with the proper voltage? • In case the LEDs are broken the user must call the Service for exchange of the same type available only at our After-sales Service Centers or authorized dealers.
If the motor seems to run too much:	• Motor running time depends on different things: number of door openings, amount of food stored, temperature of the room, setting of the temperature controls. • Is the condenser (back the appliance) free of dust and fluff? • Are the door properly closed? • Are the door seals properly fitted? • On hot days or if the room is warm, the motor naturally runs longer. • If the appliance door has been left open for a while or if large amounts of food have been stored, the motor will run longer in order to cool down the interior of the appliance.
If the appliance temperature is too high:	• Are the appliance controls correctly set? • Has a large amount of food been added to the appliance? • Check that the door is not opened too often. • Check that the door close properly.
If the doors do not open and close properly:	• Check that food packages are not blocking the door. • Check that the internal parts or automatic ice maker are not out of position. • Check that the door seals are not dirty or sticky. • Ensure the appliance is level.

8.2. FAILURES

In the event of operation alarms, they will also be displayed in the digits LEDs, (e.g. Failure 1, Failure 2, etc...) call After-sales Service and specify the alarm code. The acoustic alarm sounds, the Alarm icon ⚠ lights up and the F letter on the digit display blinks according to failure code described below:

Failure code	Visualization	
Error 2	F letter blink on/off at 0,5 sec. Blinks ON 2 times then remain off for 5 seconds. Pattern repeats.	 x2
Error 3	F letter blink on/off at 0,5 sec. Blinks ON 3 times then remain off for 5 seconds. Pattern repeats.	 x3
Error 6	F letter blink on/off at 0,5 sec. Blinks ON 6 times then remain off for 5 seconds. Pattern repeats.	 x6

9. AFTER-SALES SERVICE

Before contacting After-Sales Service:
Switch the appliance on again to see if the problem has been solved. If it has not, disconnect the appliance from the power supply and wait for about an hour before switching on again.
If, after performing the checks described in the Troubleshooting Guide and switching the appliance on again, your appliance still does not work properly, contact the After-sales Service, explain the problem.

Specify:
- the model and appliance serial number (stated on the rating plate),
- the nature of the problem,



- the Service number (the number after the word SERVICE on the data plate on the inside of the appliance),
- your full address,
- your telephone number and area code.

Note:
The direction of door opening can be changed. If this operation is performed by After-sales Service it is not covered by the warranty.

(1)

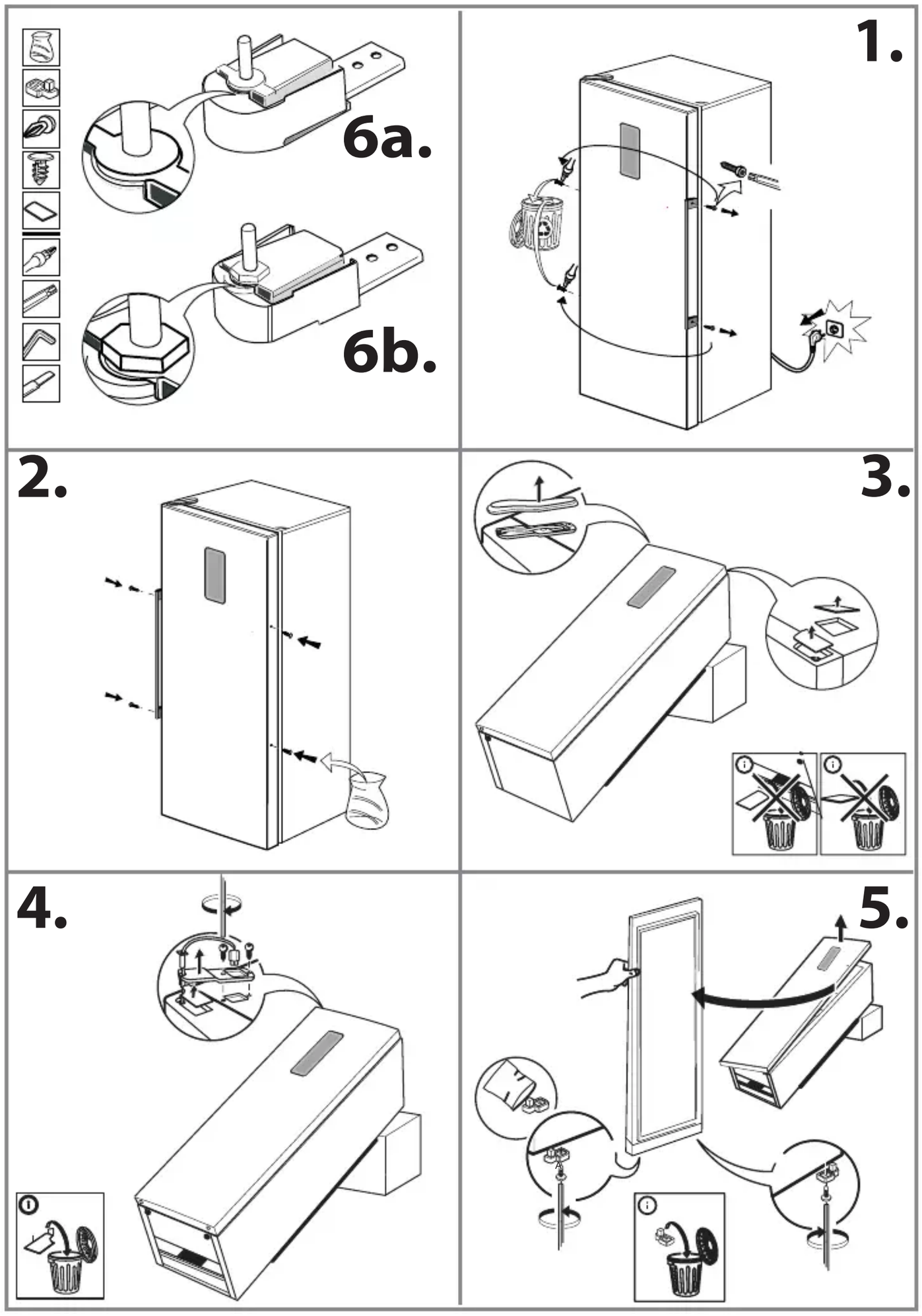

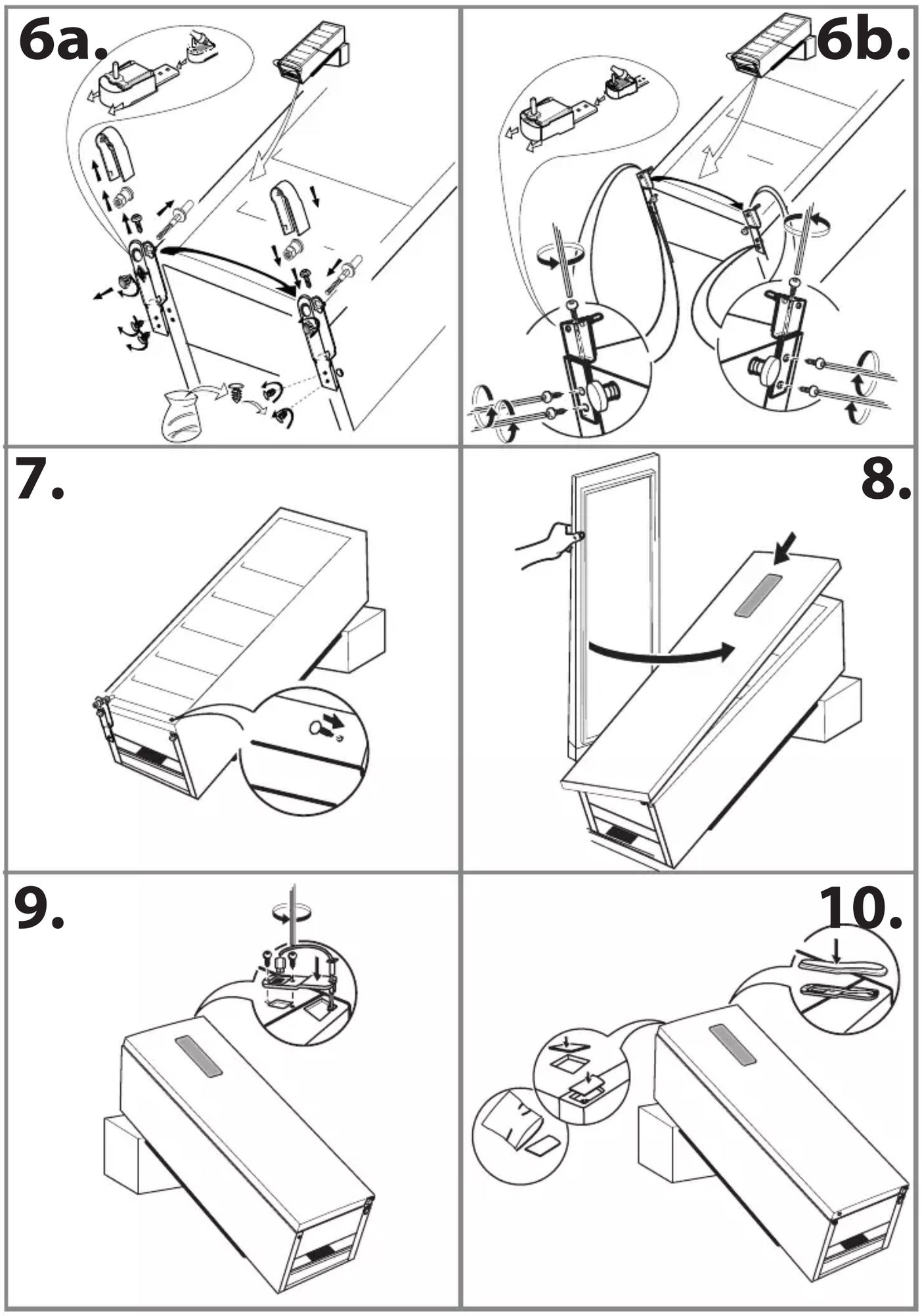
6a.
6b.
7.
8.
9.
10.

(2)

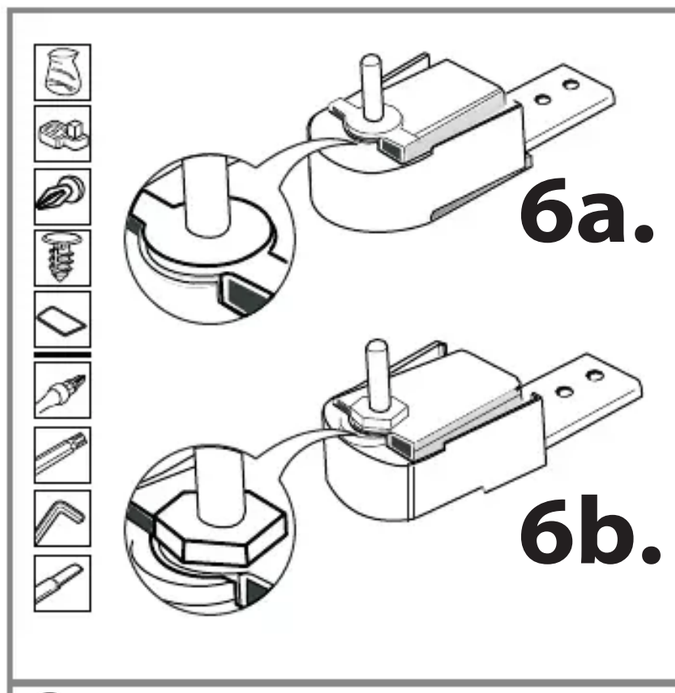

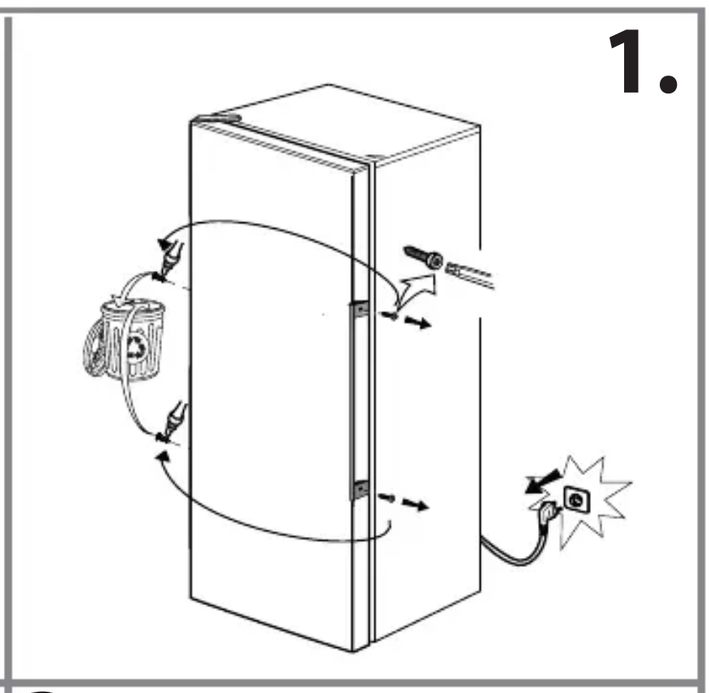

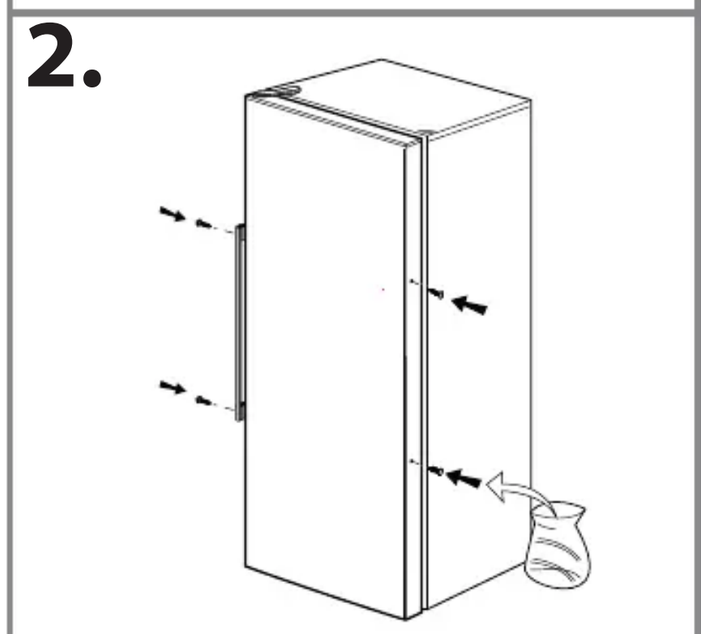

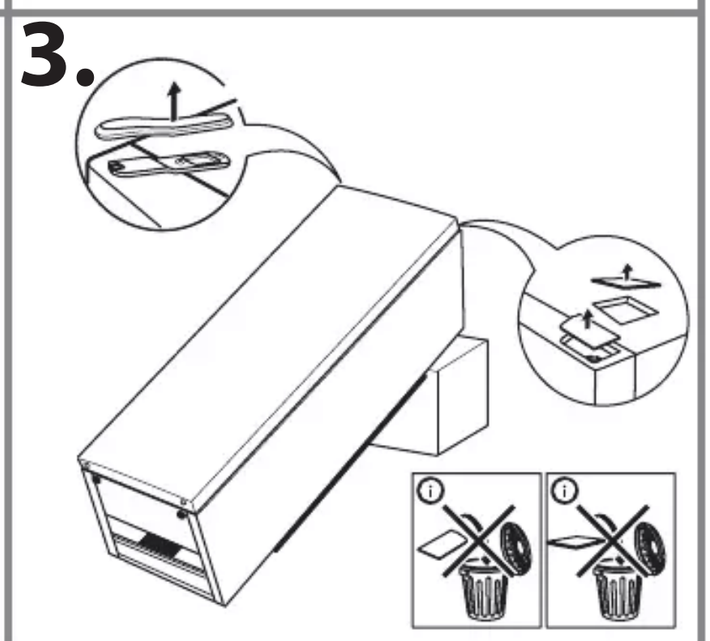

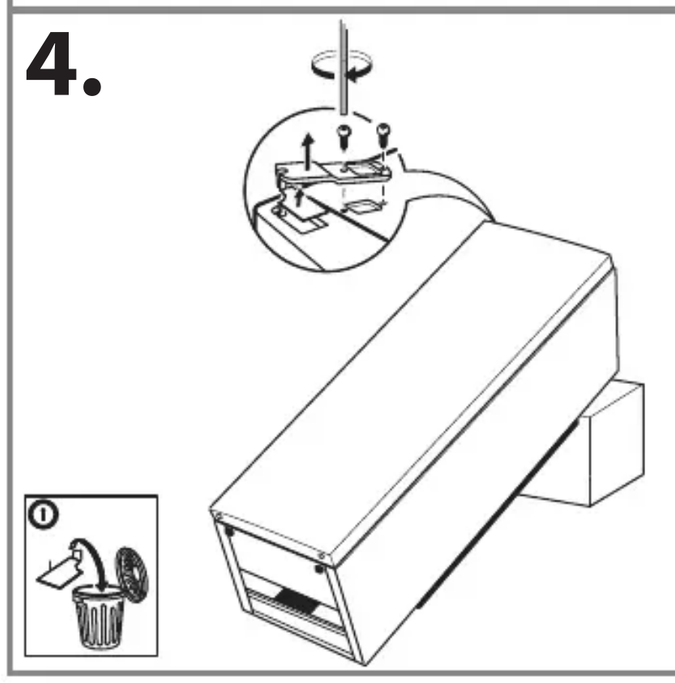

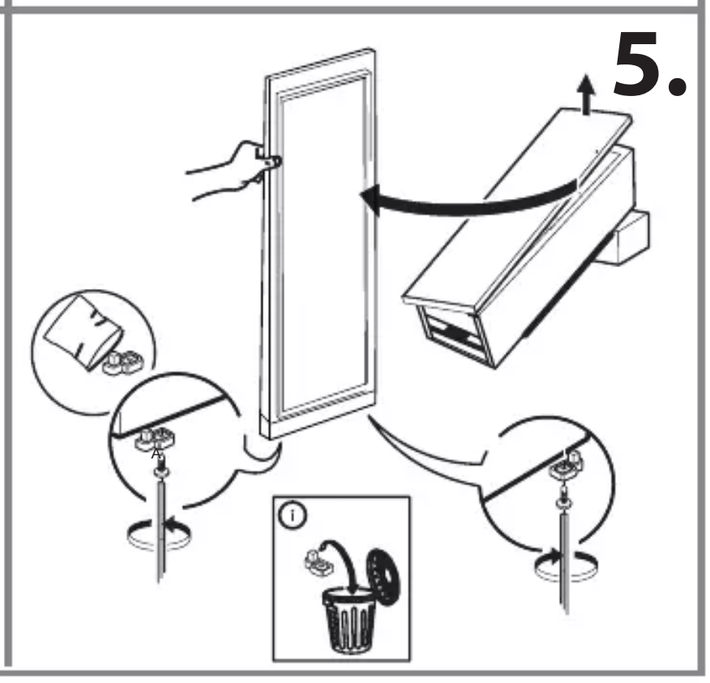

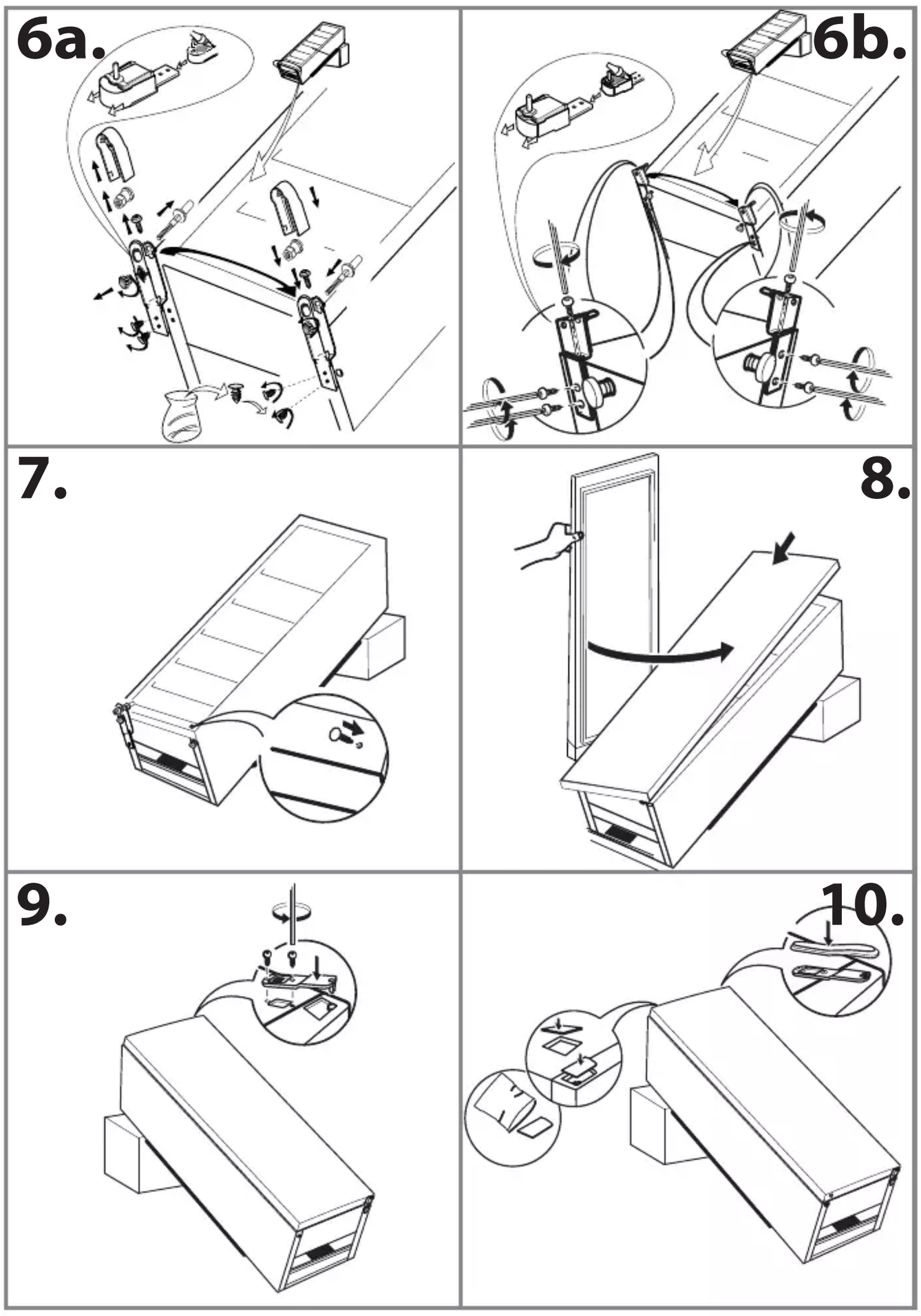
6a.
6b.
7.
8.
9.
10.

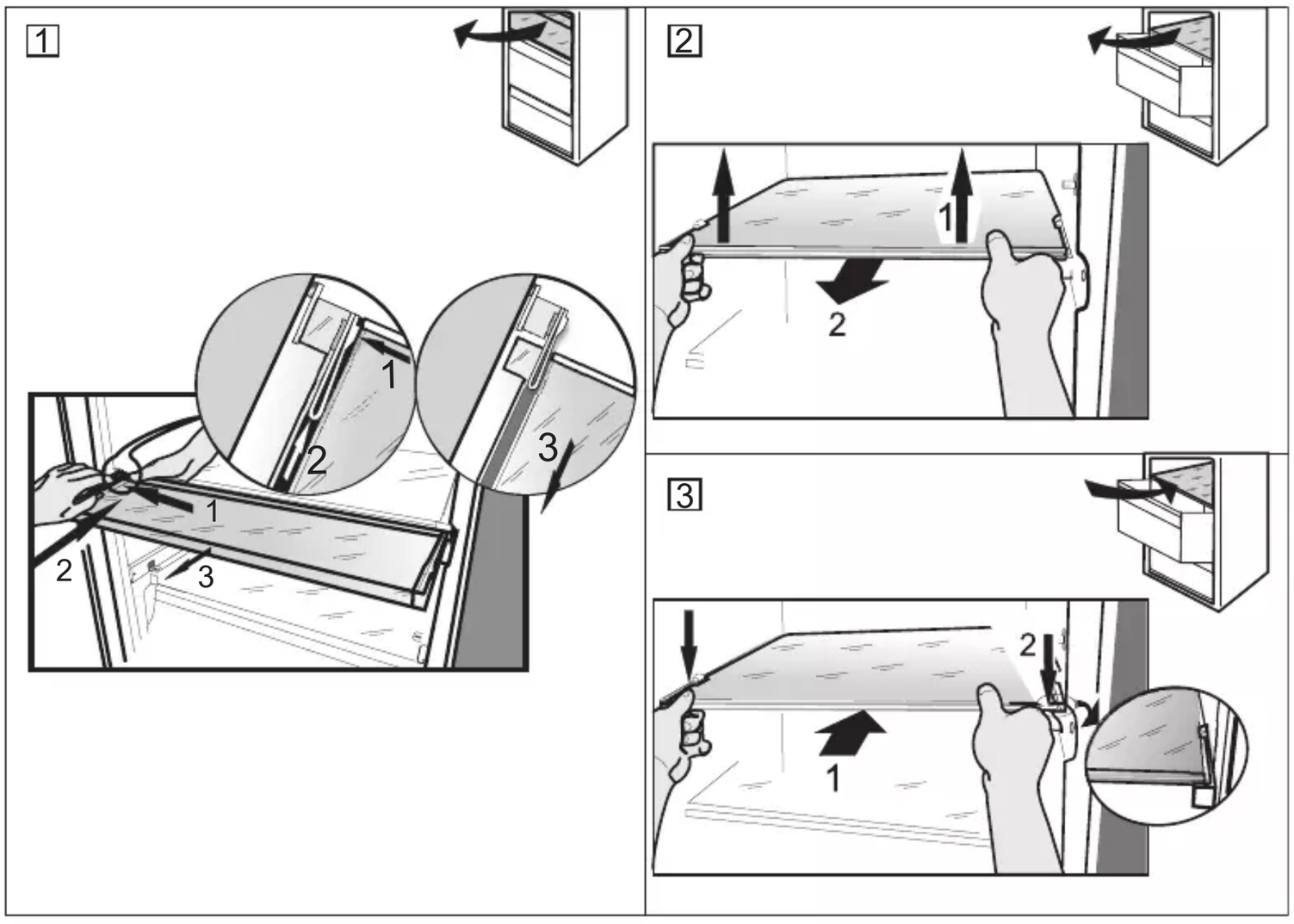
1
1
2
3
2
3
2
1
3
2
1

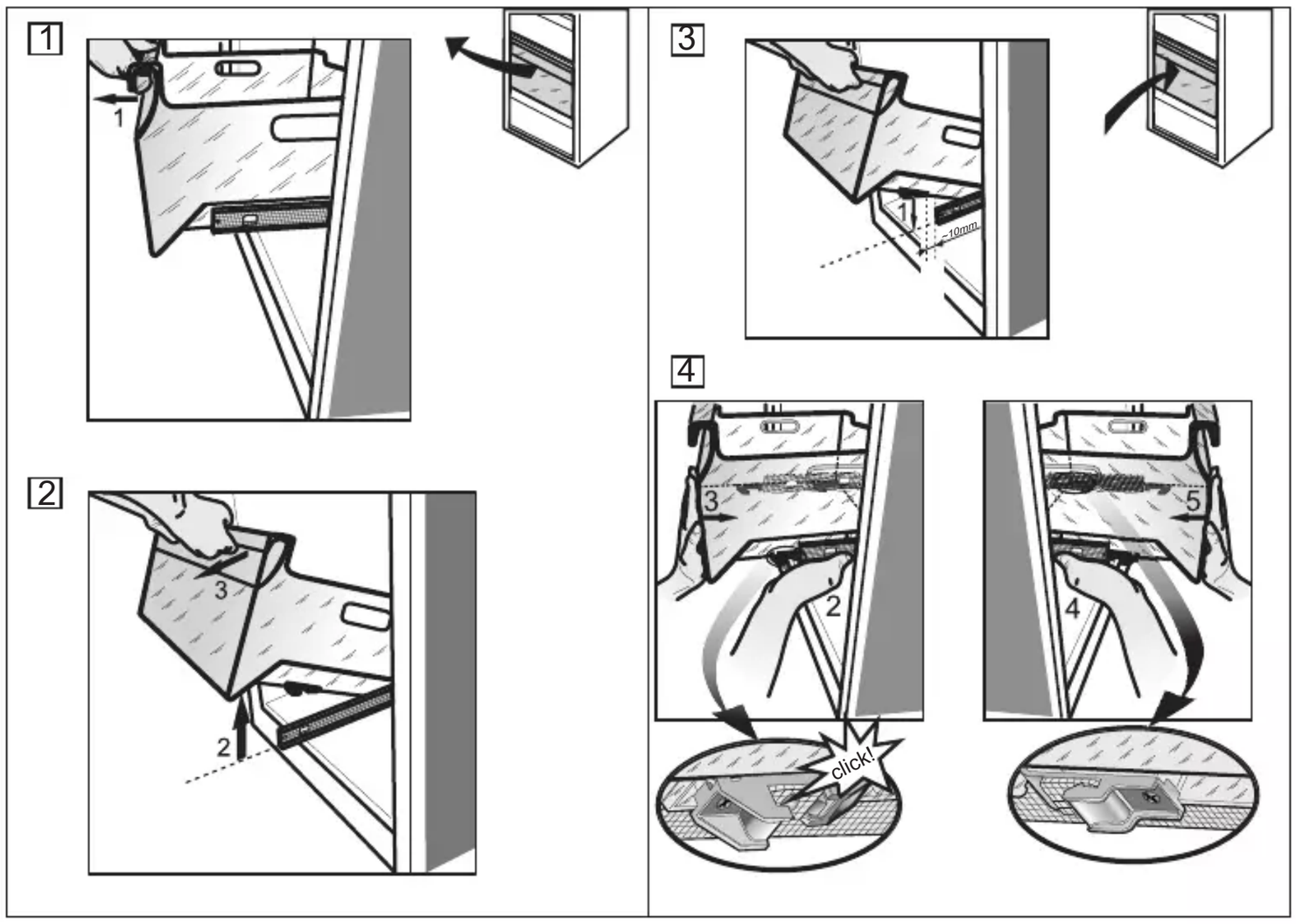

Copyright Whirlpool Europe s.r.l. 2014. All rights reserved - http://www.whirlpool.eu

400010863954
195141558.00

GB

01/16