EDGESTAR®

Wine Refrigerator

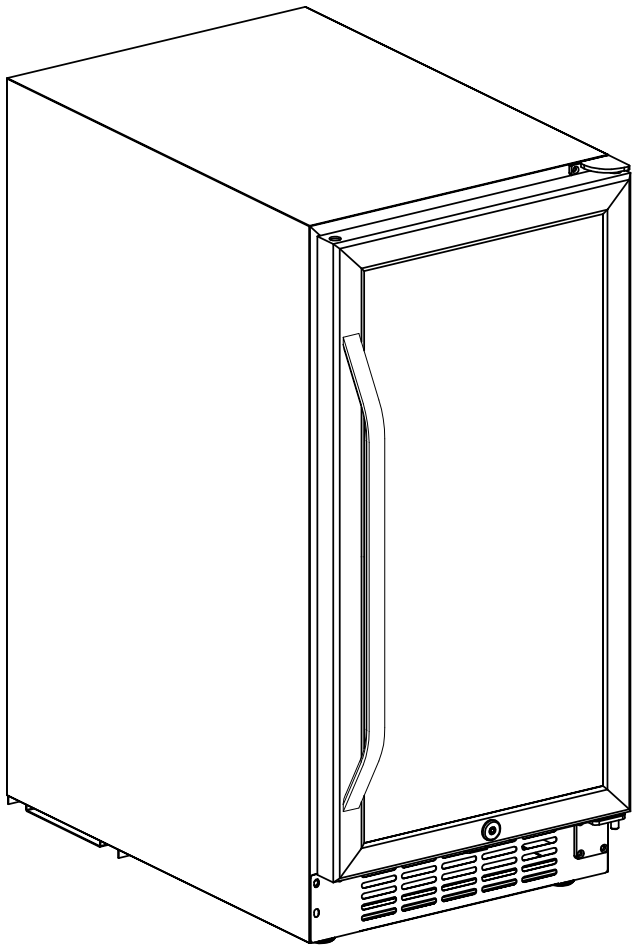

CWR263DZ

Owner's Manual

Important Safety Information

Improper handling can cause serious damage to the EdgeStar refrigerator and / or injury to the user. This refrigerator is designed for domestic indoor use only. **Do not use the unit for industrial or commercial use.** Any other use may invalidate the warranty. Please review the ratings label located on the rear panel of the unit for electrical and other technical data related to this unit. The unit must be used in a properly grounded wall outlet.

Please read and follow the safety information listed below to reduce the risk of fire, electric shock, or injury.

Electrical Safety

- Do not exceed the power outlet ratings.
- It is recommended the refrigerator be connected on its own circuit.
- The unit must be installed in accordance with state and local electrical codes.
- A standard electrical supply (115 V, 60Hz), that is properly grounded in accordance with the National Electrical Code and local codes and ordinances is required.
- Use outlets that cannot be turned off by a switch or pull chain.
- Always turn the unit off and unplug it from the outlet when cleaning.
- Unplug the unit if it is not going to be used for an extended period of time.
- Do not operate the unit with a power plug missing the ground plug, a damaged cord, or a loose socket.
- Be sure the refrigerator is properly grounded.
- Avoid installation in high humidity environments such as bathrooms and non-acclimatized basements. Excess moisture may create condensation on the door and impact the performance of the refrigerator.
- Never plug or unplug the unit with wet hands.
- Do not bypass, cut, or remove the grounding plug.
- Do not use extension cords or power strips with this unit. You may need to contact your electrician if it is necessary to use a longer cord or if you do not have a grounded outlet. Do not modify the power cord's length or share the outlet with other appliances.
- Do not start or stop the unit by switching the circuit's power on and off.
- If the power cord is damaged, it must be replaced by the manufacturer or a qualified technician.
- Never repair the unit while it is plugged in.
- Immediately unplug the unit if it makes strange sounds, emits smells, or smoke comes out of it, and contact customer service.
- Do not remove any part of the casing unless instructed to do so by an authorized technician.
- You should never attempt to repair the unit yourself. Contact customer service for service options if the unit needs service.

DANGER: Flammable Refrigerant Used! When handling, moving, and using the refrigerator, make sure to avoid either damaging the refrigerant tubing or increasing the risk of a leak.

Important Safety Information

⚠ General Safety

- To prevent injuries, use at least two people to move and install the refrigerator.
- Install the refrigerator in a well-ventilated area where the ambient temperature is above 50° F and below 90° F.
- The temperature range for this refrigerator is optimized for storage. Perishable food items may require a different storage environment.
- Do not place hot or warm items into the refrigerator before they cool down to room temperature.
- This unit is designed to be installed indoors, and protected from rain, sleet, snow, and / or moisture.
- This unit is not intended to be used by children.
- Children should be supervised to ensure that they do not play with this product.
- Never allow children to crawl inside the refrigerator. If you are disposing of the unit, remove the door.
- Do not use this appliance near flammable gas or combustibles such as gasoline, benzene, or thinner.
- Do not store explosive substances such as aerosol cans with flammable propellant in this appliance.
- Do not place the unit near heat sources such as ovens, grills, or direct sunlight.
- Only use in an upright position on a flat, level surface and provide proper ventilation.
- Do not pinch or kink the power supply line between the unit and cabinet.
- Do not leave any cleaning solutions in the unit.
- Do not use solvent-based cleaning agents or abrasive solutions to clean the unit as they may damage the interior and exterior.
- Do not place any other appliances on top of the unit.
- Do not turn the unit upside down, on its side, or at an angle off level.
- If your model of refrigerator is equipped with a lock, keep the keys away from children.
- Do not move the unit without emptying the contents and securing the door in a closed position.
- This appliance is not intended for use by persons (including children) with reduced physical, sensory, or mental capabilities unless they are given supervision or instruction by a person responsible for their safety.
- This appliance is meant for use in the household or similar settings.
- Keep all ventilation openings clear of obstruction.
- Do not use mechanical devices or other means to accelerate the defrosting process.
- Do not damage the refrigerant circuit.
- Do not use other appliances inside the refrigerator unless recommended by the manufacturer.
- If the power cord is damaged, it must be replaced by the manufacturer, its service agent, or a similarly

⚠ **DISPOSAL:** This appliance may not be treated as regular household waste, it should be taken to the appropriate waste collection

Table of Contents

Important Safety Information 2
First-Time Operating Instructions 5
Introduction 5
Parts Identification 6
Installation 8
- Unpacking the Refrigerator 8
- Types of Installation 8
- Clearance Requirements 9
- Electrical Requirements 10
- Recommended Grounding Method 10
- Leveling the Refrigerator 10
- Installing the Door Handle 11
- Installing the Shelves 11
- Removing the Shelves 11
- Reversing the Door Swing 12

Operation 14
- Installation Checklist before Operation 14
- Using the Temperature Control Panel 14
- Normal Sounds 15
- Temperature Alarm 15
- Door Ajar Alarm 15
- Defrosting 16
- Preparing the Refrigerator for Storage 16

Cleaning and Maintenance 16
Troubleshooting 17
Specifications 19
EdgeStar Limited Warranty 20

First-Time Operating Instructions

Before use, make sure all packaging labels and materials are removed from the unit. Be sure to keep track of all included parts and pieces before discarding the packaging materials. It is advised that you keep the original box and packaging materials in case you ever need to move or ship the appliance in the future.

Let the unit stand for at least 24 hours before you use it; this allows the cooling components time to settle from transit. The instruction manual should be read before use.

Introduction

Thank you for purchasing this EdgeStar refrigerator. We hope that this purchase will be the beginning of a lasting and rewarding relationship between you and EdgeStar. We will provide the customer support and exemplary products necessary to nurture that relationship.
This manual contains important information regarding the proper installation, use, and maintenance of your refrigerator. Following this manual will ensure that your product will work at its peak performance and efficiency.

Please save the original product packaging in case you need to safely transport your refrigerator.

For Your Records:
Please write down the model number and serial number below for future reference. Both numbers are located on the ratings label on the back of your unit and are needed to obtain warranty service. You may also want to staple your receipt to this manual as it is the proof of your purchase, and is also needed for service under your warranty.

Model Number: _____

Serial Number: _____

Date of Purchase: _____

For a more efficient experience, please do the following before contacting customer service:

- If you received a damaged product, immediately contact the retailer or dealer who sold the product.
- Read and follow this instruction manual carefully to help you install, use, and maintain your refrigerator.
- Read the troubleshooting section of this manual. It will help you diagnose and solve common issues.
- Visit us on the web at www.edgestar.com to register your product, download product guides, and access additional troubleshooting resources and up-to-date information.
- For warranty service, customer service representatives are available at **service@edgestar.com.**

Parts Identification

Note: Gather the model and serial number from the product label and write them down before installing the refrigerator.

Front View:

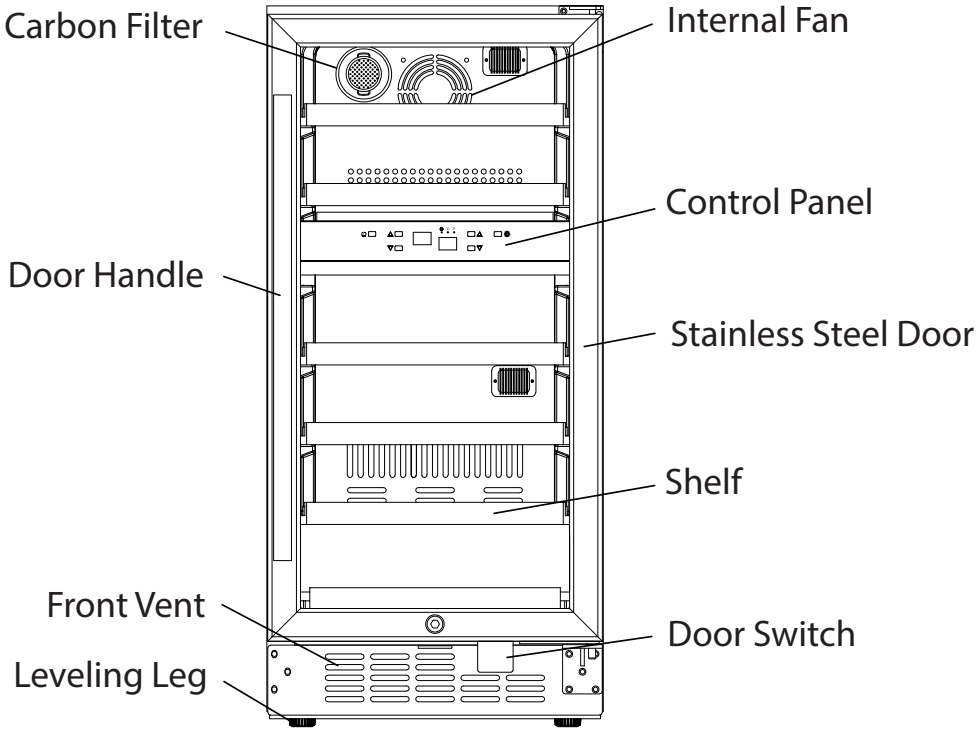

Rear View:

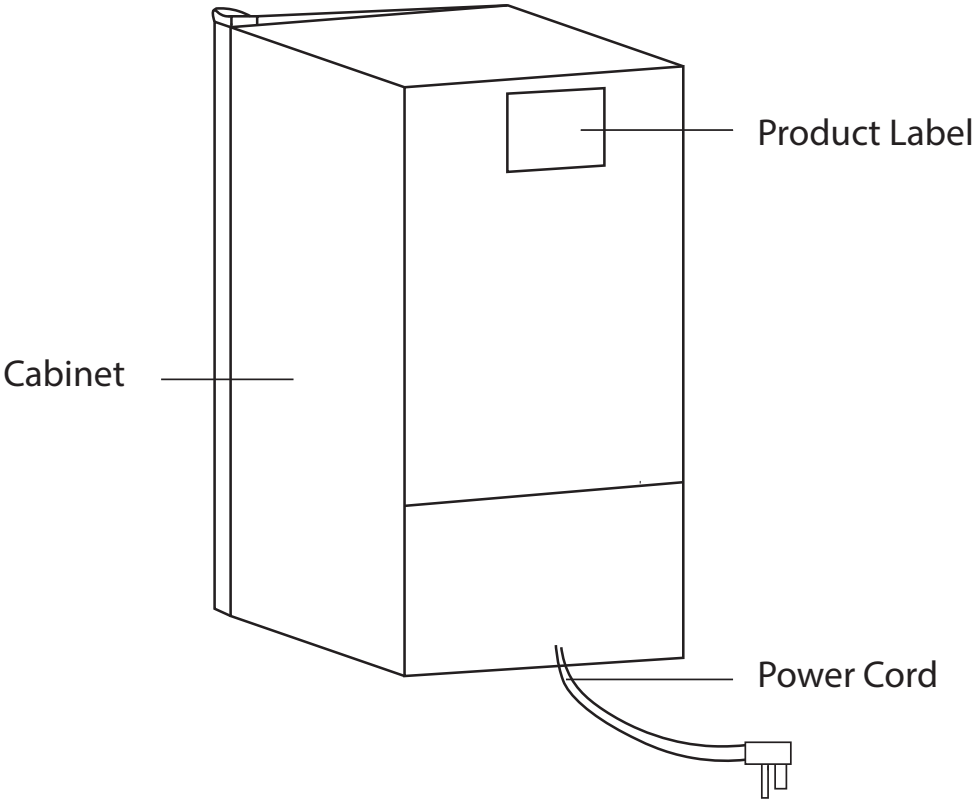

Carbon Filter:

A built-in carbon filter protects your contents by acting as a natural barrier against harmful odors.

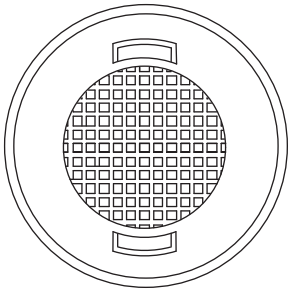

Note: The carbon filter should be replaced every 3-6 months depending on the unit's exposure level to odor. If the unit is placed in a kitchen, regular replacement every three (3) months is ideal.

Internal Fan:

This is an air-cooled unit equipped with an internal fan that maintains a consistent internal temperature.

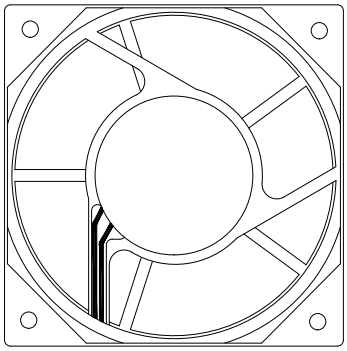

Installation

The refrigerator should be installed in accordance with local electrical code requirements. The refrigerator should also be placed in a location that is strong enough to support its total weight, keeping in mind that it will weigh substantially more when fully loaded than when empty. **Before you plug the refrigerator into a power supply, be sure to let it stand upright for at least 24 hours to allow the compressor's oils to settle.**

Unpacking the Refrigerator

⚠ **Warning:** Use two or more people to move and install the refrigerator. Failure to do so can result in back or other injury. Carefully remove the packaging materials. Remove any shipping tape and glue from your refrigerator before use. Do not use sharp instruments, rubbing alcohol, flammable fluids, or abrasive cleaners to remove tape or glue. These products can damage the surface of your refrigerator.

⚠ **Warning:** Do not remove any safety, warning, or product information labels from your refrigerator.

Types of Installation

This refrigerator has been designed for freestanding or built-in installation. In each case, there must be adequate ventilation and access for service.

Freestanding Installation:

A freestanding installation will allow you to install the refrigerator in almost any place you desire. You must follow the stated instructions for electrical requirements and leveling the refrigerator.

Built-in Installation:

A built-in installation will allow you to install the refrigerator under a counter as long as the required clearance space around the refrigerator is provided. It is necessary to allow adequate ventilation space around the unit, including at the back of the unit.

The following additional items must be observed:

1. Place the refrigerator in front of the installation location. Adjust the feet and place the unit flat on the floor or on a platform depending on your installation requirements.
2. If the electrical outlet for the refrigerator is behind the cabinet, plug in the refrigerator.
3. Push the refrigerator into position.

⚠ **Warning:** DO NOT install the refrigerator behind a closed cabinet door.

Clearance Requirements

Notes:
- Choose a location that has ambient temperatures above 50° F and below 90° F. Operation outside these temperatures may result in lowered efficiency or cause other adverse effects.
- This unit MUST be installed in an area protected from the elements, e.g. wind, rain, water spray or drips.
- The refrigerator should not be located next to ovens, grills, or other heat sources.
- Do not kink or pinch the power supply cord between the refrigerator and the wall or cabinet.

When installing the refrigerator under a counter, follow the recommended spacing dimensions shown.

To ensure proper service access and ventilation, allow at least 1-2” of clearance at the back, 1/4” at the top, and 1/4” at the sides. If the door side is against a wall, allow at least 2 3/8” of clearance. The installation should allow the unit to be pulled forward for servicing, if necessary.

Top View:

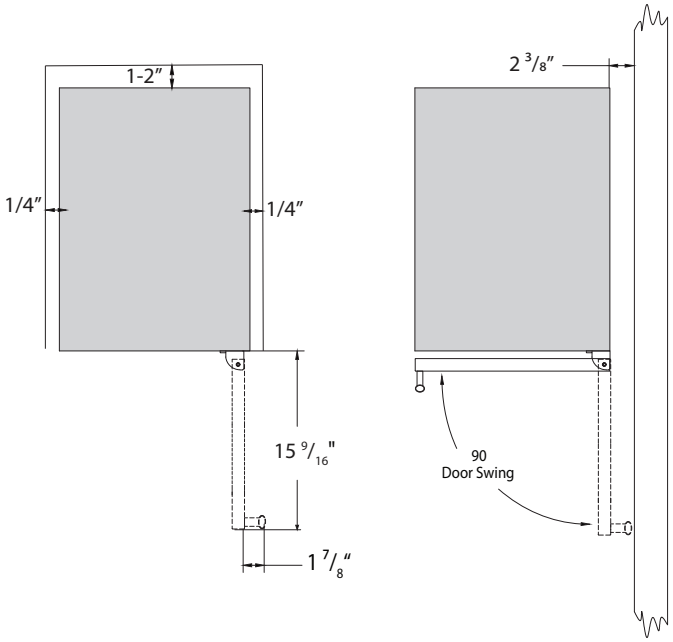

Side View:

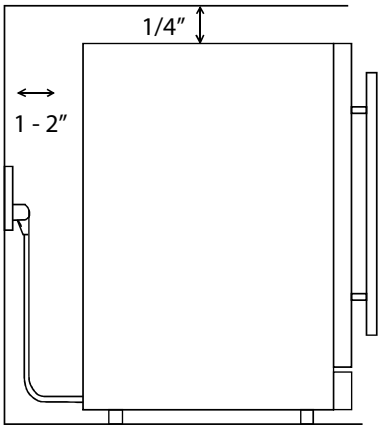

Note: The refrigerator should be installed on a firm and level surface that will be able to support the entire weight of a fully loaded unit. It is important for the refrigerator to be level in order to work properly. If needed, you can adjust the height of the refrigerator by rotating the feet. See the “Leveling the Refrigerator” section.

Note: A standard electrical supply (115V AC only, 60 Hz), properly grounded in accordance with National Electrical Code and local codes and ordinances, is required.

Electrical Requirements

ELECTRIC SHOCK HAZARD!
- Plug into a grounded 3-prong outlet.
- Never remove the grounding prong from the plug.
- Never use an adapter to bypass the grounding prong.
- DO NOT use an extension cord.
- Failure to follow these instructions can result in fire, electrical shock, or death.

Before you move your Refrigerator into its final location, it is important to make sure you have the proper electrical connection:

A standard electrical supply (115 V, 60Hz), properly grounded in accordance with the National Electrical Code and local codes and ordinances is required.

It is recommended that a separate circuit, serving only your refrigerator, be provided. Use receptacles that cannot be turned off by a switch or pull chain.

The fuse (or circuit breaker) size should be 15 Amps.

Recommended Grounding Method

For your personal safety, this appliance must be grounded. It is equipped with a power supply cord that has a 3-pronged grounding plug. To minimize possible shock hazard, the cord must be plugged into a mating 3-pronged wall socket and grounded in accordance with the National Electrical Code and local codes and ordinances. If a mating wall socket is not available, it is the personal responsibility of the customer to have a properly grounded, 3-prong wall receptacle installed by a qualified electrician.

Leveling the Refrigerator

It is important for the refrigerator to be level in order to work properly. It can be raised or lowered by rotating the plastic sheaths around each of the feet on the bottom of the machine. If you find that the surface is not level, rotate the feet until the refrigerator becomes level. You may need to make several adjustments to level it. We recommend using a carpenter's level to check the machine.

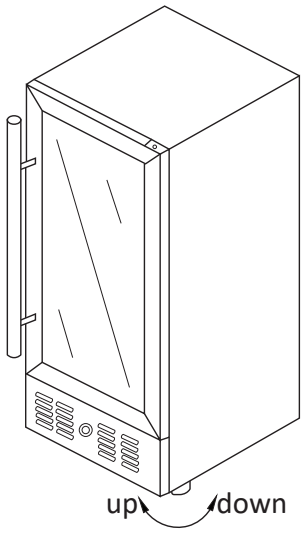

1. Place a carpenter's level on top of the product to see if the refrigerator is level from front to back and side to side.
2. Adjust the height of the feet as follows:
Turn the leveling feet to the right to lower that side of the refrigerator.
Turn the leveling feet to the left to raise that side of the refrigerator.

Note: Once you are ready to install the unit in a cabinet or directly on the floor, you must adjust the feet to level the refrigerator.

Installing the Door Handle

To install the door handle:

1. Open the door and carefully pull the door gasket around the area where the handle is to be installed.
2. Carefully remove the two pre-installed decorative plugs from the front of the door.
3. Insert each Phillips head screw through the gasket side of the door until the screw passes through the door.
4. Align the handle with the screws and tighten using a Phillips head screwdriver until the handle is flush against the door frame.
5. Carefully press the door gasket into its original position.

Note: Some refrigerators do not have decorative plugs installed.

Warning: Do not over-tighten the screws as this may cause damage to the handle or the stainless steel door.

Installing the Shelves

To prevent damaging the door gasket, make sure to open the door fully before pulling the shelves off their tracks.

1. Open the door completely.
2. Slide the shelf on the shelf track and slowly push back until it stops.
3. Push down on the front of the shelf to allow the back of the shelf to lift over the plastic post. (Imagine a seesaw movement.) Continue to push the shelf back until both notches pass through the plastic posts on each side of the shelf track.
4. Continue to push the shelf back into place.

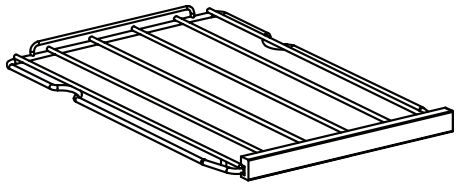

Removing the Shelves

1. Open the door completely.
2. Make sure the shelf is pushed in completely towards the back of the refrigerator.
3. If necessary, make sure you remove all the contents sitting on the shelf.
4. Pull the shelf forward until the notch aligns with the plastic post on each side of the shelf track.
5. Lift the shelf until both notches pass through the posts
6. Pull the shelf straight out until it is completely removed. Set aside gently.

Reversing the Door Swing

Warning: Before you begin, unplug the Refrigerator.

1. Open the door and using a Phillips screwdriver, remove the bottom screws from the lower hinge.
2. Carefully slide the bottom of the door forward and down, and place it on a padded surface to prevent damage.

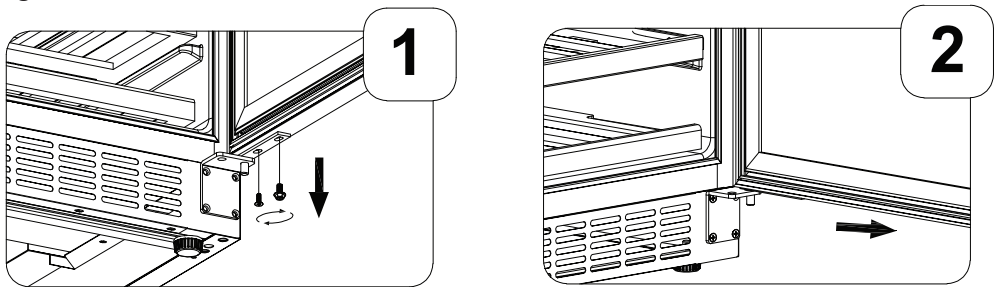

3. Remove the screws from the upper right hinge. Place the upper right hinge in a safe place in case you need to reverse the door in the future. Remove the plastic caps from the upper left hinge corner. Install the upper left hinge by fastening the screws through the left hinge to the cabinet. Insert the plastic caps into the upper right corner.

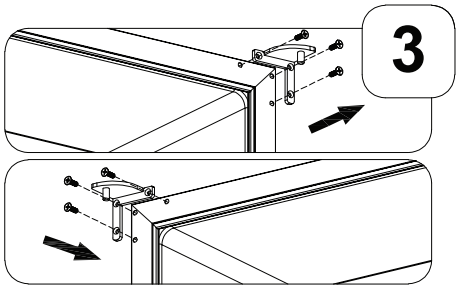

4. Remove the bushing from the lower hinge.
5. Remove the lower hinge and install on the bottom left side of the cabinet.

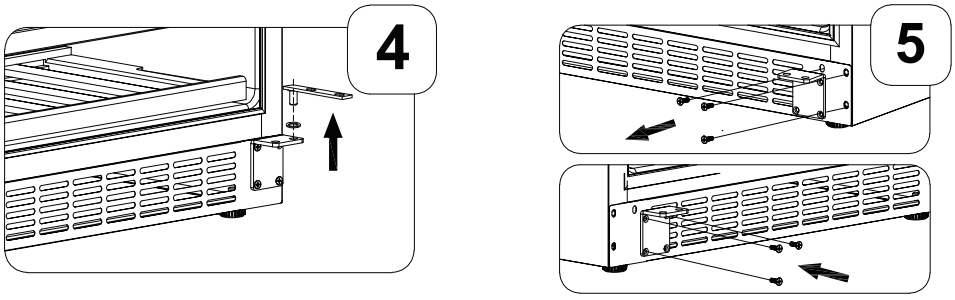

6. Install the bushing into the lower hinge on the bottom left support bracket. Remove the decorative screws from the left corner of the door and install and tighten them to the right corner holes. Remove the plastic cap from the top left corner of the door and insert it into the top right corner.
7. Carefully insert the door into the upper right corner hinge, then slide the door on top of the lower hinge and secure the door by installing the lower screws.

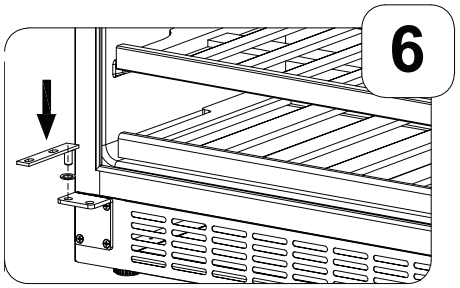

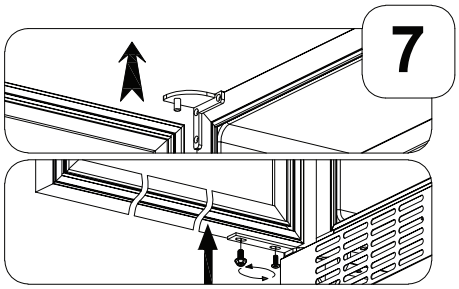

Operation

Installation Checklist before Operation

1. Have all packing materials and tape been removed from the interior and exterior of the refrigerator?
2. Have the installation instructions been followed, including connecting the machine to electricity? And has proper grounding been installed for the refrigerator?
3. Has the machine been leveled?
4. Is the refrigerator in a site where the ambient temperature is between 50° F and 90° F all year round?
5. Is there a clearance of at least 1- 2” at the rear, 1/4” at the top, and 1/4” at the sides for proper air circulation?

Using the Temperature Control Panel

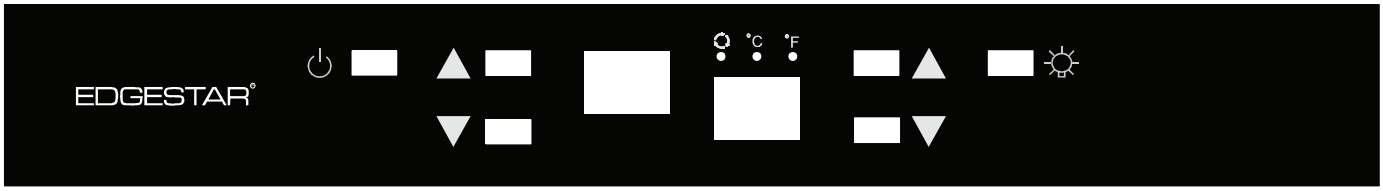

The refrigerator has a temperature range from 54°F to 65°F for the upper zone, 40°F to 54°F for the lower zone and will display the set temperature.

Power Button: Press and hold for approximately 3 seconds to turn the unit on or off.

Up Button: Press to increase the temperature by 1 degree increments.

Down Button: Press to decrease the tempreature by 1 degree increments.

Run Light: When lit, the unit is in cooling mode.

Light Button: Press the button to turn the inner light on or off.

Celsius/Fahrenheit Light: The Celcius or Fahrenheit light will be lit depending on which temperature type is being displayed. To switch between C and F press and hold both the Up and Down buttons simultaneously for approximately 3 seconds. A beep will occur and the indicator light will illuminate next to desired temperature setting.

Note: The refrigerator is equipped with a temperature memory function. If power is suddenly lost, the previously set temperature will be saved and the Refrigerator will return to this setting once power is restored. Allow at least 24 hours before storing your items to allow the setting temperature to be reached.

Caution: If you turned the unit off, please wait at least 5 minutes before turning it back on.

Normal Sounds

Your new refrigerator may make noise during normal operation. Most of these sounds are normal. Hard surfaces like the floor and walls can make sounds seem louder than they actually are.

The following describes several sounds you may hear and what may be making them:

• Rattling noises may come from the flow of the refrigerant or the water line. Items stored on top of the refrigerator can also make noises.
• The high efficiency compressor may make a pulsating or high-pitched sound.
• Water running from the evaporator to the water bin may make a splashing sound.
• As each cycle ends, you may hear a gurgling sound due to the refrigerant flowing in your refrigerator.
• You may hear air being forced over the condenser by the condenser fan.

Temperature Alarm

If the interior temperature is higher than 73°F (23°C), “HI” is shown on the temperature control panel and the temperature alarm will sound continuously after one (1) hour. This indicates that the inner temperature is too high. If the inner temperature is lower than 32°F (0°C), “LO” is shown on the temperature display panel and the temperature alarm will sound continuously after fifteen minutes. If one of these situations occurs please reference the troubleshooting section found in this manual or contact EdgeStar for support.

Door Ajar Alarm

This refrigerator includes a door ajar alarm, which will sound if one of the doors is open for more than five (5) minutes. Leaving the door open for extended periods of time will cause poor cooling performance and may shorten the life of the refrigerator. Keep the doors closed as frequently as possible.

Warning:
• Do not touch the power plug when your hands are wet.
• Never unplug the unit by pulling on the cord.

Defrosting

Note that under most refrigerating settings, the unit will automatically defrost in most ambient conditions. However, on colder settings, some frost may build up. Additionally, the more humid the ambient conditions, the more frost may build up. Keep the door closed as much as possible and avoid opening the door unnecessarily to minimize frost build-up. If frost is preventing the door from closing properly, you may need to power the unit off until the frost melts. Use a soft absorbent towel to dry the unit.

⚠ **Warning:** Never attempt to remove frost with a sharp object!

Preparing the Refrigerator for Storage

If the refrigerator will not be used for a long time, or is to be moved to another place, it will be necessary to defrost the unit and dry the interior.

1. Disconnect the Refrigerator from the power supply by removing the power plug from the wall socket.
2. Leave the door open to allow for air circulation and to prevent mold, mildew, and unpleasant smells.

⚠ **Caution:** Store the unit out of reach from children. If you have children, you may want to take precautions such as removing the door to prevent a child from being trapped inside.

Cleaning and Maintenance

Periodic cleaning and proper maintenance will ensure efficiency, top performance, and long life.

Exterior Cleaning

The door and cabinet may be cleaned with a mild detergent or hand soap mixed with warm water. Do not use solvent based or abrasive cleaners. Use a soft sponge and rinse with clean water. Wipe with a soft clean towel to prevent water spotting. If the door panel is stainless steel, it can discolor when exposed to chlorine gas and moisture. Clean stainless steel using a cloth dampened with a mild detergent and warm water solution. Never use an abrasive or caustic cleaning agent.

Interior Cleaning

The refrigerator’s interior should be cleaned occasionally.

1. Disconnect power to the unit.
2. Open the door and remove the contents and shelves.
3. Wait until the unit defrosts.
4. With a clean cloth, wipe down the interior of the unit.
5. Reinsert the shelves and items.
6. Reconnect power to the unit.

Troubleshooting

Before Calling for Help:

If the unit appears to be malfunctioning, read through the “Operation” section of this manual first. If the problem persists, check the Troubleshooting Guide below and on the following page. The problem may be something that can easily be solved or explained.

Symptoms	Possible Causes	Solutions
The refrigerator turns on and off frequently.	The room temperature is higher than the recommended ambient environment.	Run the refrigerator at the appropriate ambient temperature.
	The door is being opened too often.	Minimize the number of times the door is opened.
	The door is not completely closed.	Make sure the door is completely closed.
	The door gasket is not sealing properly.	Make sure the door gasket is sealing properly.
	The refrigerator does not have the suggested ventilation.	Read and follow the “Installation Clearance Requirements” section.
The refrigerator does not turn on.	There is a power failure.	Ensure that the refrigerator is plugged in and the power outlet has power.
	The refrigerator is not plugged in.	Plug the unit in to a power outlet that has sufficient amperage.
	A house fuse has blown or the circuit breaker is tripped.	Replace the broken fuse in your fuse box or reset the breaker.
The refrigerator will not reach the desired temperature.	The refrigerator is placed too close to a heat source.	Keep the refrigerator away from direct sunlight or other heat sources.
	The refrigerator does not have sufficient ventilation.	Read and follow the “Installation Clearance Requirements” section.
	The door is opened too frequently or for a long period of time.	Close the door tightly and do not open the door too frequently or for a long period of time.
The refrigerator is making strange noises.	Certain sounds are normal.	Read the “Normal Sounds” section.
	The unit is not level or is touching another appliance.	Check to make sure that the refrigerator is level, and that it is not in contact with another appliance or furniture.

Symptoms	Possible Causes	Solutions
The body of the refrigerator is electrified.	The unit is not grounded properly.	Contact your local electrician to test your electrical grounding system.
Frost is forming in the refrigerator.	The environment is humid.	Manual defrosting is required; unplug the unit to allow the frost to melt. If frost builds up frequently, you can move the unit to a location with a warmer temperature, minimize the number of times you open the door, or check the door gasket for a good seal.
	The ambient temperature is too low.	
	The door gasket is not installed properly.	
	The door is being opened too frequently.	
The door will not shut properly.	The refrigerator is not level.	Make sure the refrigerator is on a level surface.
	The door gasket is dirty.	Clean the door gasket.
	The door gasket is not installed correctly.	Make sure the door gasket is correctly installed.
	The shelves are incorrectly installed.	Install the shelves correctly.

Specifications

Note: Technical data and performance information are provided for reference only. Specifications are subject to change. Check the rating label on the refrigerator for the most accurate information.

Product Type	Wine Refrigerator
Model	**CWR263DZ**
Voltage / Frequency	AC 115V~60Hz
Amperage	1.5
Color	Black Cabinet; Stainless Steel Door
Refrigerant	R600a
Storage Capacity	23 Bottles
Temperature Range	54°F - 65°F (Upper Zone) 40°F - 54°F (Lower Zone)
Dimensions (Height x Width x Depth)	32” x 15” x 25 ¼”

Note: The refrigerator can store 23 standard 750 ml. wine bottles.

Note: The depth indicated includes the product handle. Depth without the handle is 23 $^{1}/_{2}$”.

EdgeStar Limited Warranty

One (1) Year Parts & One (1) Year Labor

This product is warranted by EdgeStar and is subject to any conditions set forth as follows:

WHAT IS COVERED:

LABOR: For a period of ONE (1) YEAR from the date of original purchase, labor will be performed free of charge at an authorized EdgeStar repair facility. At its option, EdgeStar will repair the product with new or remanufactured parts, or exchange the defective product with a new, refurbished, or remanufactured product. If a product is replaced, it will carry the remaining warranty of the original product. After the one (1) year period, EdgeStar will no longer be responsible for labor charges incurred. All defective products and parts covered by this warranty will be repaired or replaced on a mail-in basis to an EdgeStar authorized repair facility.

PARTS: For a period of ONE (1) YEAR from the date of original purchase, EdgeStar will supply new, rebuilt, or refurbished parts free of charge. EdgeStar may request a defective part be returned in exchange for the replacement part. All replacement parts or products will be new, remanufactured, or refurbished. All products and parts replaced by EdgeStar under warranty service become the property of EdgeStar.

This warranty applies to the original purchaser only, and only covers defects in workmanship experienced during operation of the product under normal service, maintenance, and usage conditions. This warranty applies to the purchase and use of this product in residential settings within the contiguous United States of America.

WHAT IS NOT COVERED- The following limitations apply to the coverage of this warranty. This warranty does not cover:

- Labor charges for installation, setup or training to use the product.
- Shipping damage, and any damage caused by improper packaging for shipment to an authorized service center, and any damaged caused by improper voltage or any other misuse, including abnormal service, handling, or usage.
- Cosmetic damage such as scratches and dents.
- Normal wear and tear on parts or replacement of parts designed to be replaced, e.g. filters, cartridges, batteries.
- Service trips to deliver, pick-up, or repair, install the product, or to instruct in proper usage of the product.
- Damages or operating problems resulting from misuse, abuse, operation outside environmental specifications, uses contrary to instructions provided in the owner's manual, accidents, acts of God, vermin, fire, flood, improper installation, unauthorized service, maintenance negligence, unauthorized installation or modification, or rental or commercial use.
- Labor, service transportation, and shipping charges incurred 91 days or more after the date of original purchase.
- The use of EdgeStar products in commercial or rental settings.
- Optional accessories, attachments, and appearance items.
- Products that have been modified to perform outside of specifications without the prior written permission of EdgeStar.
- Products lost in shipment, or theft.
- Products sold AS IS or from an unauthorized reseller.
- Products that have had their serial numbers removed or defaced. Products with serial numbers that have been invalidated.
- Damage to personal property from use of product.
- Replacement of repair of household fuses, circuit breakers, wiring, or plumbing.

OBTAINING WARRANTY SERVICE: If you believe your product is defective, contact EdgeStar Customer Support for troubleshooting assistance and warranty service at www.edgestar.com or call 1-866-319-5473. Before contacting Customer Support you are required to have your model number, serial number, and proof of purchase available upon request. Once an EdgeStar authorized representative has confirmed that your product is defective and eligible for warranty service, the product must be returned to an EdgeStar authorized repair facility. EdgeStar is not responsible for damage resulting from shipper mishandling or improper packaging. Do not return a defective product to the place of purchase. Products received without a return authorization number will be refused.

THIS WARRANTY IS IN LIEU OF ANY OTHER WARRANTY, EXPRESS OR IMPLIED, INCLUDING WITHOUT LIMITATION, ANY WARRANTY OF MERCHANTABILITY OR FITNESS FOR A PARTICULAR PURPOSE. TO THE EXTENT ANY IMPLIED WARRANTY IS REQUIRED BY LAW, IT IS LIMITED IN DURATION TO THE EXPRESS WARRANTY PERIOD ABOVE. NEITHER THE MANUFACTURER NOR ITS DISTRIBUTORS SHALL BE LIABLE FOR ANY INCIDENTAL, CONSEQUENTIAL, INDIRECT, SPECIAL, OR PUNITIVE DAMAGES OF ANY NATURE, INCLUDING WITHOUT LIMITATION, LOST REVENUES OR PROFITS, OR ANY OTHER DAMAGE WHETHER BASED IN CONTRACT, TORT, OR OTHERWISE. IN NO EVENT AND UNDER NO CIRCUMSTANCE OF ANY TYPE OR KIND SHALL THE SELLER, MANUFACTURER AND/OR DISTRIBUTOR BE LIABLE FOR ANY REASON, UNDER ANY THEORY, FOR MORE THAN THE BASIC COST OF THE PRODUCT TO THE PURCHASER OR END USER. SOME STATES DO NOT ALLOW THE EXCLUSION OF INCIDENTAL OR CONSEQUENTIAL DAMAGES, SO THE ABOVE EXCLUSION MAY NOT APPLY TO YOU. THIS WARRANTY GIVES YOU SPECIFIC LEGAL RIGHTS. YOU MAY HAVE OTHER RIGHTS THAT VARY FROM STATE TO STATE.

EDGESTAR®

©2021 EdgeStar