CUSTOMER SERVICE NUMBER
In the U.S. 1-800-571-8390

KEEP THIS NUMBER FOR FUTURE REFERENCE!
Warrantor: Zhongshan Galanz Consumer Electric Appliances Co., Ltd, Guangdong 528429

AMANA®

REFRIGERATOR
Use & Care Guide

Model No.:

AMA43BKE

®/TM©2018 Amana. All rights reserved.
Manufactured under license by Galanz-Zhongshan Galanz Consumer Electric Appliances Co., Ltd, Guangdong, China.
Limited warranty provided by manufacturer.

To ensure proper use of this appliance and for your safety, please read the following instructions completely before operating this appliance.

TABLE OF CONTENTS

Refrigerator safety 1
Important safety instructions..... 1
Important grounding instructions..... 2
Installation instructions..... 3
Operating instructions..... 4
Parts and features..... 5
Specifications..... 6
Cleaning..... 7
Defrosting..... 7
Power Failure..... 8
Vacation..... 8
Moving the refrigerator..... 9
Reversing the door.....10
Replacement of the interior light.....11
Troubleshooting tips.....12
Assistance.....14
Warranty.....14

REFRIGERATOR SAFETY

Your safety and the safety of others are very important.

We have provided many important safety messages in this manual and on your appliance. Always read and obey all safety messages.

This is the safety alert symbol.
This symbol alerts you to potential hazards that can kill or hurt you and others.
All safety messages will follow the safety alert symbol and either the word"DANGER" or "WARNING."
These words mean:

⚠DANGER **You can be killed or seriously injured if you don't immediately follow instructions.**

⚠WARNING **You can be killed or seriously injured if you don't follow instructions**.

All safety messages will tell you what the potential hazard is, tell you how to reduce the chance of injury, and tell you what can happen if the instructions are not followed.

IMPORTANT SAFETY INSTRUCTIONS

When using electrical appliances, basic safety precautions should always be followed to reduce the risk of explosion fire, electrical shock, and/or injury to persons, including the following:
Read all instructions before using the appliance.

1. This appliance must be grounded. Connect only to properly grounded outlet. See Important Grounding Instructions on page 3.
2. Install or locate this refrigerator only in accordance with the provided Installation Instructions.
3. To protect against electric shock, do not place cord, plug, or refrigerator in water or other liquid.
4. The refrigerant of this product is R600a, which is flammable. Make sure not to damage the cooling system during the transportation and installation.
5. Please note that servicing shall be done by factory authorized service personnel, so as to minimize the risk of possible ignition due to incorrect parts or improper service.

SAVE THESE INSTRUCTIONS

⚠WARNING

Suffocation Hazard

Remove door from your old refrigerator.

Failure to do so can result in death or brain damage.

Before you throw away your old refrigerator or freezer:

1. Take off the doors.
2. Leave the shelves in place so that children may not easily climb inside.

Refrigerants

All refrigeration products contain refrigerants, which under federal law must be removed prior to product disposal. If you are getting rid of an old refrigeration product, check with a qualified disposal company for instructions.

IMPORTANT GROUNDING INSTRUCTIONS

This appliance must be grounded due to the event of an electrical short circuit. This appliance is equipped with a cord having a grounding wire with a grounding plug. The plug must be plugged into an outlet that is properly installed and grounded.

⚠WARNING



Electrical Shock Hazard

Plug into a grounded 3 prong outlet.

Do not remove ground prong.

Do not use an adapter.

Do not use an extension cord.

Failure to follow these instructions can result in death, fire, or electrical shock.

1. Consult a qualified electrician or serviceman if the grounding instructions are not completely understood or if doubt exists as to whether the appliance is properly grounded.

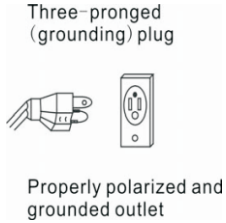

LOCATION REQUIREMENTS

NOTES:

- It is recommended that you do not install the refrigerator near an oven, radiator, or other heat source.
- Do not install in a location where the temperature will fall below 55°F (13°C). For best performance, do not install the refrigerator behind a cabinet door.

⚠WARNING



Explosion Hazard

Keep flammable materials and vapors, such as gasoline, away from refrigerator.

Failure to do so can result in death, explosion, or fire.

INSTALLATION INSTRUCTIONS

⚠WARNING

Excessive Weight Hazard

Use two or more people to move and install refrigerator.

Failure to do so can result in back or other injury.

1. Before using the refrigerator for the first time, remove all of the packing materials, including the foam base and adhesive tape holding accessories in place.
2. The refrigerator should be located on a firm, flat surface that is strong enough to support the refrigerator when it is fully loaded.
3. Leave a minimum of ½″ between each side of the appliance and the wall. The top and back of the appliance should have a minimum of 1½″ clearance. This allows for proper air circulation. This appliance is intended to be free-standing and should not be built-in or placed in a recessed area.
4. The refrigerator legs must be adjusted during installation in order to function properly. The leveling legs on the front corners can be adjusted by turning clockwise to raise the appliance, and counter-clockwise to lower it. Be sure to have the appliance slope slightly backward to ensure that the door closes tightly.

OPERATING INSTRUCTIONS

1. Allow refrigerator to stand upright for 4 hours before using.

⚠WARNING



Electrical Shock Hazard
Plug into a grounded 3 prong outlet.
Do not remove ground prong.
Do not use an adapter.
Do not use an extension cord.
Failure to follow these instructions can result in death, fire, or electrical shock.

2. Plug into a grounded outlet (see Important Grounding Instructions).

3. The temperature of the refrigerator can be controlled manually with the control dial. However, the number shown on the knob does not directly represent the temperature. Instead, the larger the number is, the cooler the interior temperature will be. Change to "0" stops the cooling but does not turn the power off. Turn the knob to setting 4 for normal use; turn it to setting 5-7 if a cooler temperature is required or to setting 1-3 when a warmer temperature is needed.

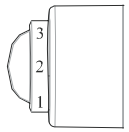

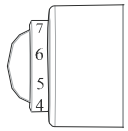

4. Food should be kept in sealed containers to prevent odors or drying.

5. Hot food should be cooled down before placing into the appliance to prevent increase in interior temperature and power consumption. Placing food inside too soon will impact the performance.

6. Reducing the frequency of door opening can lower power consumption.

PARTS AND FEATURES

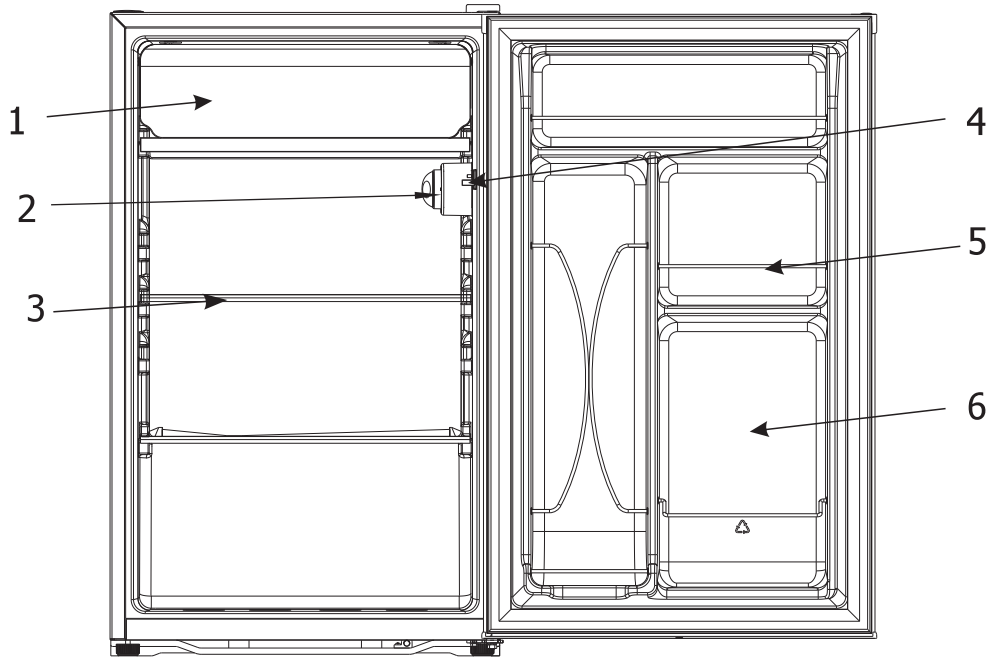

1. Freezer compartment
2. Temperature control dial
3. Removable glass shelf
4. Lamp switch
5. Can dispenser
6. Tall bottle storage

SPECIFICATIONS

Model		AMA43BKE
Climate class		T
Electric shock protection type		I
Capacity (cu.ft)		4.3
Voltage (V)		120
Frequency (Hz)		60
Current (A)		0.8
Voice [dB(A)]		≤ 42
Energy consumption (kW.h/24h)		0.62
Refrigerant		R600a/0.96oz
Net weight (lbs)		63.93
Interior temperature (F)		32~46.4
Dimension (in inches)	Width	19.92
	Depth	22.01
	Height	32.91

CLEANING



Interior

Clean the interior of the appliance with a mixture of warm water and baking soda, using about 1 – 2 tablespoons per quart of water. Use a sponge or soft cloth and be sure to wring excess moisture out before cleaning around the controls.

Rinse thoroughly with warm water and dry with a clean, soft cloth.

Exterior

The exterior surface can be cleaned using warm water and a mild detergent.

Rinse thoroughly and dry with a clean, soft cloth.

Door Gasket

The door gasket must be kept clean to ensure a proper seal. Be sure to clean the gasket frequently, using the method described above.

DEFROSTING

Frost build-up on the walls of the freezer section will increase energy consumption and reduce the efficiency of the appliance. Defrost the freezer section whenever the frost reaches a thickness of ¼".

1. Remove food and ice cube tray from the refrigerator and freezer compartment.
2. If your model has a drip tray, be sure to place it under the freezer compartment to collect water. It may be necessary to empty the drip tray during the defrosting process.

⚠WARNING



Electrical Shock Hazard

Disconnect power before cleaning.

Replace all parts and panels before operating.

Failure to do so can result in death or electrical shock.

3. Turn the unit off and unplug it from the outlet.
4. The defrosting process can take several hours. Open the door to speed up the process.
5. When defrosting is completed, wipe the compartment with a soft cloth to remove any remaining water.
6. Reset the refrigerator temperature, following the operating instructions on page 4.

ATTENTION: Do not use sharp or pointed objects to remove frost or ice from the surfaces of the freezer compartment. This can cause damage to the compartment walls and cooling coils, and will void the warranty.

POWER FAILURE

When a power failure occurs, the refrigerator can normally store food for several hours. Do not put additional food into the appliance during a power failure, and do not open door. Disconnect the plug from the outlet, and reconnect when the power has been restored. **Always inspect for**, **and discard**, **any spoiled or thawed food in the refrigerator or freezer before resuming use of the appliance**.

VACATION

Before leaving on any vacation, remove food that could spoil while you are gone. If you plan to be gone for an extended period of time, we recommend that all of the food should be removed from the appliance and it should be turned off and unplugged from the outlet. Clean the interior according to the directions provided in the Cleaning section of this manual, and leave the door open.

MOVING THE REFRIGERATOR

⚠WARNING

Excessive Weight Hazard

Use two or more people to move and install refrigerator.

Failure to do so can result in back or other injury.

1. Turn off the refrigerator and unplug from the outlet.
2. Remove all food and securely tape down all loose items inside.
3. Tape the door shut.
4. Do not lift or pull the door or door handle during transportation.
5. When moving, the appliance can not be tilted over 45 degrees as possible damage to the sealed system could occur .
6. Take care to avoid strong vibration or impact to the appliance.

REVERSING THE DOOR

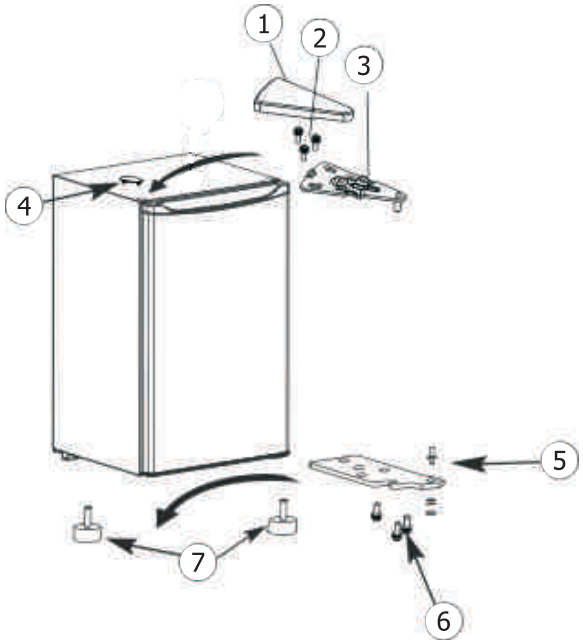

1.Top hinge cover
2.Top hinge screw
3. Top hinge
4. Cabinet plug
5. Bottom hinge
6. Bottom hinge screw
7. Leveling leg

Do not tilt the appliance over 45°when revising the door as possible damage to the sealed system may occur.

1. Remove top hinge cover and 3 top hinge screws which are below it. Then remove top hinge.
2. Remove 1 cabinet plug .
3. Remove the door.
4. Remove right and left leveling legs.
5. Remove the bottom hinge and 3 bottom hinge screws.
6. Install the bottom hinge on the other side of the leveling legs with 3 bottom hinge screws.
7. Install right and left leveling legs. There are two holes below the refrigerator to fit the two leveling legs.
8. Install the door.
9. Install the top hinge on the other side with 3 top hinge screws.
10. Install top cover above the top hinge and install 1 cabinet plugs on the other side.
11. Adjust the leveling legs.

REPLACEMENT OF INTERIOR LIGHT

Uninstall the cover and replace the light with a screwing light (120V/10W). Refer to the illustrations and instructions below:

1. Move the lamp cover 1.2~2 inches according to arrow point direction.

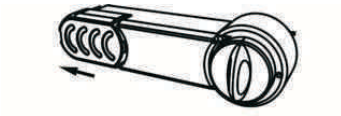

2. Take out the lamp cover.

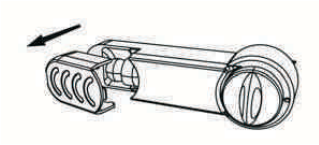

3. Rotate and take out the bulb in counterclockwise direction.

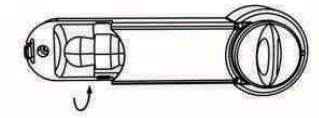

4. Replace bulb and reinstall lamp cover.

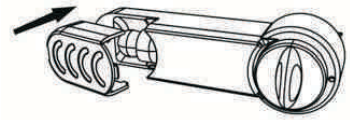

TROUBLESHOOTING TIPS

⚠WARNING



Electrical Shock Hazard
Plug into a grounded 3 prong outlet.
Do not remove ground prong.
Do not use an adapter.
Do not use an extension cord.
Failure to follow these instructions can result in death, fire, or electrical shock.

Problem	Possible Cause	What to do
Refrigerator does not operate	·Not plugged in tightly	·Unplug, wait 10 seconds, then plug in again
	·Tripped circuit breaker or blown fuse	·Replace fuse or reset circuit breaker
	·Problem with electrical outlet	·Consult with a professional electrician
Refrigerator seems too warm/food does not seem to cool	·Temperature setting may be too warm	·Lower the temperature setting
	·Door opened too frequently	·This is normal
	·Door not closed tightly	·Check to make sure nothing inside is causing the door to not close
	·Warm weather	·This is normal

Problem	Possible Cause	What to do
Compressor runs too long, or cycles on and off frequently	·Hot weather	·This is normal
	· Door opened too frequently	·This is normal
	·Door not closed tightly	·Check to be sure nothing inside the refrigerator is preventing the door from closing
	·Temperature control set at coldest setting	·Adjust temperature to a warmer setting
	·Large amounts of food placed in refrigerator	·This is normal
Moisture forms on the outside of the appliance	·This is normal during periods of high humidity	·Wipe the surface dry using a soft cloth
	·The door is slightly open	·Close the door tightly
Moisture forms on the inside of the appliance	·This is normal during periods of high humidity	·This is normal
	·Door is opened too long or too frequently	·Do not open the door too long or too frequently
Vibration noise	·Refrigerator is on an uneven surface	·Adjust the leveling legs
	·Refrigerator is touching a wall	·Move the refrigerator away from the wall

The following are normal conditions that can be encountered during the operation of this appliance:

- The flow of refrigerant through the coils can cause a noise.
- The sides of the appliance may become warm as a result of the cooling function.

Assistance

Before calling for assistance or service, please check "Troubleshooting." It may save you the cost of a service call. If you still need help, follow the instructions below.
When calling, please know the purchase date and the complete model and serial number of your appliance. This information will help us to better respond to your request.

If you need replacement parts

If you need to order replacement parts , we recommend that you only use factory specified replacement parts. Factory specified replacement parts will fit right and work right because they are made with the same precision used to build every new.
To locate factory specified replacement parts in your area, call us or your nearest designated service center.
In the U.S.A.
toll free: 1-800-571-8390 **.**

Limited Warranty

This warranty applies to products purchased and used in the U.S. This is the only express warranty for this product and is in lieu of any other warranty.

This product is warranted to be free from defects in material and workmanship for a period of one (1) year from the date of original purchase, except as noted below. During this period, we will repair or replace this product at our option.

This warranty extends only to the original consumer purchaser and does not cover a defect resulting from abuse, misuse, neglect including failure to clean product regularly in accordance with manufacturer's instructions, use for commercial purposes, or any use not in conformity with the printed directions.

This warranty is provided by Galanz-Zhongshan Galanz Consumer Electric Appliances Co., Ltd.

We exclude all claims for special, incidental, and consequential damages caused by breach of express or implied warranty. All liability is limited to the amount of the purchase price. **Every implied warranty, including any statutory warranty of merchantability or fitness for a particular purpose, is disclaimed except to the extent prohibited by law, in which case such warranty is limited to the duration of this written warranty.** This warranty gives you specific legal rights. You may have other legal rights that vary depending on where you live. Some states do not allow limitations on implied warranties or special, incidental, or consequential damages, so the foregoing limitations may not apply to you.

If you have a claim under this warranty, please call our 1-800-571-8390.
For faster service please have the model number and serial number ready for operator to assist you.