Delfield

6000XL & 6100XL Series Reach Ins

Service, Installation and Care Manual

Please read this manual completely before attempting to install or operate this equipment! Notify carrier of damage! Inspect all components immediately.



Refrigerators and Freezers

NOTE

IMPORTANT INFORMATION
READ BEFORE USE
PLEASE SAVE THESE INSTRUCTIONS!

July 2013

Manitowoc

Important Warning And Safety Information

WARNING Read This Manual Thoroughly Before Operating, Installing, Or Performing Maintenance On The Equipment.

WARNING Failure To Follow Instructions In This Manual Can Cause Property Damage, Injury Or Death.

WARNING Do Not Store Or Use Gasoline Or Other Flammable Vapors Or Liquids In The Vicinity Of This Or Any Other Appliance.

WARNING Unless All Cover And Access Panels Are In Place And Properly Secured, Do Not Operate This Equipment.

WARNING This Appliance Is Not Intended For Use By Persons Who Lack Experience Or Knowledge, Unless They Have Been Given Supervision Or Instruction Concerning Use Of The Appliance By A Person Responsible For Their Safety.

WARNING This Appliance Is Not To Be Played With.

WARNING Do Not Clean With Water Jet.

WARNING Do Not Use Electrical Appliances Inside The Food Storage Compartment Of This Appliance.

CAUTION Observe the following:

- Minimum clearances must be maintained from all walls and combustible materials.
- Keep the equipment area free and clear of combustible material.
- Allow adequate clearance for air openings.
- Operate equipment only on the type of electricity indicated on the specification plate.
- Unplug the unit before making any repairs.
- Retain this manual for future reference.

Contents

Receiving & Inspecting Equipment 3
Serial Number Information 4
Warranty Information 4
Regulatory Certifications 4
Specifications 5
Installation 6
Door Reversal Procedures 7
Leg & Caster Installation 7
Operation 8-9
Evaporator Fan Matrix 9
Maintenance 10-11
Wiring Diagrams 12-16
Refrigeration Package Diagram 17
Replacement Parts 18-19
Standard Labor Guidelines 20
Notes 21-23

Receiving And Inspecting The Equipment

Even though most equipment is shipped crated, care should be taken during unloading so the equipment is not damaged while being moved into the building.

1. Visually inspect the exterior of the package and skid or container. Any damage should be noted and reported to the delivering carrier immediately.
2. If damaged, open and inspect the contents with the carrier.
3. In the event that the exterior is not damaged, yet upon opening, there is concealed damage to the equipment notify the carrier. Notification should be made verbally as well as in written form.
4. Request an inspection by the shipping company of the damaged equipment. This should be done within 10 days from receipt of the equipment.
5. Be certain to check the compressor compartment housing and visually inspect the refrigeration package. Be sure lines are secure and base is still intact.
6. Freight carriers can supply the necessary damage forms upon request.
7. Retain all crating material until an inspection has been made or waived.

Serial Number Information

The serial number tag of all 6000XL Series refrigerators and freezers is located inside the cabinet on the left side.

Always have the serial number of your unit available when calling for parts or service. A complete list of authorized Delfield parts depots is available at www.delfield.com.

This manual covers standard units only. If you have a custom unit, consult the customer service department at the number listed below.

©2013 The Delfield Company. All rights reserved. Reproduction without written permission is prohibited. "Delfield" is a registered trademark of The Delfield Company.

Warranty Information

Visit *http://www.delfield.com/minisite/service/warranty_info* to:

- Register your product for warranty.
- Verify warranty information.
- View and download a copy of your warranty.

Regulatory Certifications

The models are certified by:

National Sanitation Foundation (NSF)

Underwriters Laboratories (UL)

Specifications

Model	Voltage	Amps	Storage Capacity FT^3	Shelf Capacity FT^2	H.P.	BTU/HR	Evap. Temp	R-404A Charge Oz.	Shipping Weight	Nema Plug
6025XL-SH,S	115	6.0	20.0	15.1	1/4	2092	20˚F	12.5	274lbs/124kg	5-15P
6025XL-G,GH	115	6.0	20.0	15.1	1/4	2092	20˚F	12.5	338lbs/153kg	5-15P
6051XL-SH,S	115	8.0	43.5	33.2	1/3	2488	20˚F	12.5	454lbs/206kg	5-15P
6051XL-G,GH	115	8.0	43.5	33.2	1/3	2488	20˚F	12.5	548lbs/249kg	5-15P
6076XL-SH,S	115	16.0	66.5	48.3	1/4, 1/3	2092/2488	20˚F	12.5/12.5	622lbs/282kg	5-20P
6076XL-G,GH	115	16.0	66.5	48.3	1/4, 1/3	2092/2488	20˚F	12.5/12.5	774lbs/351kg	5-20P
6125XL-S,SH	115	9.0	20.0	15.1	1/2	2092	-20˚F	12.5	274lbs/124kg	5-15P
6151XL-S,SH	115	12.0	43.5	33.2	3/4	1923	-20˚F	12.5	454lbs/206kg	5-15P
6176XL-S,SH	120/208-230	20.0	66.5	48.3	1/2, 3/4	1516/1923	-20˚F	12.5/12.5	622lbs/282kg	14-20P

Model	Voltage	Amps	Storage Capacity FT^3	Shelf Capacity FT^2	Required BTU/HR	Evap. Temp	Shipping Weight
6025XLR-SH,S	115	5.0	20.0	15.1	2092	20˚F	274lbs/124kg
6025XLR-G,GH	115	5.0	20.0	15.1	2092	20˚F	338lbs/153kg
6051XLR-SH,S	115	5.0	43.5	33.2	2488	20˚F	454lbs/206kg
6051XLR-G,GH	115	5.0	43.5	33.2	2488	20˚F	548lbs/249kg
6076XLR-SH,S	115	5.0	66.5	48.3	2092/2488	20˚F	622lbs/282kg
6076XLR-G,GH	115	5.0	66.5	48.3	2092/2488	20˚F	774lbs/351kg
6125XLR-S,SH	115	5.0	20.0	15.1	2092	-20˚F	274lbs/124kg
6151XLR-S,SH	115	5.0	43.5	33.2	1923	-20˚F	454lbs/206kg
6176XLR-S,SH	115	5.0	66.5	48.3	1516/1923	-20˚F	622lbs/282kg

Installation

Location

Units represented in this manual are intended for indoor use only. Be sure the location chosen has a floor strong enough to support the total weight of the cabinet and contents. A fully loaded 6000XL series can weigh as much as 1500 pounds. Reinforce the floor as necessary to provide for maximum loading. For the most efficient refrigeration, be sure to provide good air circulation inside and out.

Inside cabinet: Do not pack refrigerator so full that air cannot circulate. The refrigerated air is discharged at the top rear of the unit. It is important to allow for proper air flow from the top rear to the bottom of the unit. Obstructions to this air flow can cause evaporator coil freeze ups and loss of temperature or overflow of water from the evaporator drain pan. The rear of the unit has molded ribs and the shelves have a rear turn up on them to prevent this. However, bags and other items can still be located to the far rear of the cabinet. There is also a return air diffuser along the top front of the cabinet interior, this also requires proper air circulation. Prevent obstruction by locating large boxes and tall stacks of product to the bottom of the cabinet.



Outside cabinet: Be sure that the unit has access to ample air. Avoid hot corners and locations near stoves and ovens.

It is recommended that the unit be installed no closer than 2" from any wall with at least 12" of clear space above the unit. Avoid exposing glass door units to direct sunlight. Direct sunlight through the glass doors will make the ABS liner fade and become brittle and will greatly reduce refrigeration efficiency.

Leveling

A level cabinet looks better and will perform better because the doors will line up with the frames properly, the cabinet will not be subject to undue strain and the contents of the cabinet will not move around on the shelves. Use a level to make sure the unit is level from front to back and side to side. Units supplied with legs will have adjustable bullet feet to make the necessary adjustments. If the unit is supplied with casters, no adjustments are available. Ensure the floor where the unit is to be located is level.

Stabilizing

Some models are supplied on casters for your convenience, ease of cleaning underneath and for mobility. It is very important, however, that the cabinet be installed in a stable condition with the front wheels locked while in use.

Should it become necessary to lay the unit on its side or back for any reason, allow at least 24 hours before start-up so as to allow compressor oil to flow back to the sump. Failure to meet this requirement can cause compressor failure and unit damage.

NOTE

Unit repairs will not be subject to standard unit warranties due to improper installation procedures.

Electrical connection

Refer to the amperage data on the specifications page, the serial tag, your local code or the National Electrical Code to be sure the unit is connected to the proper power source. A protected circuit of the correct voltage and amperage must be run for connection of the line cord, or permanent connection to the unit.

DANGER

The thermostat must be turned to OFF and the unit disconnected from the power source whenever performing service, maintenance functions or cleaning the refrigerated area.

Power Switch

Select units are equipped with a power disconnect switch located next to the energy saver switch and thermostat control knob. Switch must be in the "on" position for the unit to operate. On freezers, if the switch is turned off, then returned to the on position, the unit will enter a defrost cycle and the display will read "Def."

NOTE

Upon powering unit, there could be up to a 10 minute delay before unit begins to cool.

Door Reversal Procedures

Standard Edge-Mount Hinge

1. Open door 90˚ and lift door straight up and off hinges.
2. Remove the metal screw covers on each door-side hinge section by sliding it down and off.
3. Remove two outer screws that mount each hinge to door, loosen the center screw, rotate hinge 180˚, reinstall outer screws and retighten center screw.
4. Remove two screws that mount lock on top of door, turn door up-side-down and remount lock to top of door.
5. Use a 3/16" drill to drill holes in cabinet face frame at the marked hinge locations on the new hinge side.
6. Remove the cabinet hinge screw covers by gently prying them out with a small screwdriver.
7. Remove all three screws from each hinge and mount them to the opposite side of the door opening.
8. Remove the plastic cam from the hinges by pulling straight up, then rotating the cam 180˚ and pushing back into the hinge.
9. Remount the door and check for proper closure and gasket seal. Adjust hinges as needed. Once adjustment is verified, remove the door, reinstall all hinge screw covers and set the door back in place.
10. If plugs are needed to plug old screw holes in cabinet face frame, please contact Delfield Parts Department at (800) 733-8821, extension 12801.

Only for Models Ordered With Re-Hinging Option

1. Open door 90˚ and lift door straight up and off hinges.
2. Remove the metal screw covers on each door-side hinge section by sliding it down and off.
3. Remove two outer screws that mount each hinge to door, loosen the center screw, rotate hinge 180˚, reinstall outer screws and retighten center screw.
4. Remove two screws that mount lock on top of door, turn door up-side-down and remount lock to top of door.
5. Pry the plugs out of the hinge mounting holes on the side opposite the current hinge locations and set them aside.
6. Remove the cabinet hinge screw covers by gently prying them out with a small screwdriver.
7. Remove all three screws from each hinge and mount them to the opposite side of the door opening. Press the plugs removed in step 5 into the screw holes from the original hinge locations.
8. Remove the plastic cam from the hinges by pulling straight up, then rotating the cam 180˚ and pushing back into the hinge.
9. Remount the door and check for proper closure and gasket seal. Adjust hinges as needed. Once adjustment is verified, remove the door, reinstall all hinge screw covers and set the door back in place.
10. If additional plugs are needed due to loss or damage, please contact Delfield Parts Department at (800) 733-8821, extension 12801.

Leg & Caster Installation

WARNING

Some cabinets may weigh over 1000 lbs (450 kg). Use a lifting device capable of supporting the unit when removing skid or installing legs or casters.

To install the legs, or casters refer to Figure 1 and proceed as follows:

1. Remove unit from skid.
2. Raise unit to access leg/caster mounting bolts on bottom of unit.
3. Remove the bolts from the cabinet and use them to attach the legs or casters.

NOTE

All single-section units require that the swivel casters be mounted on the front and rigid casters be mounted on the rear.

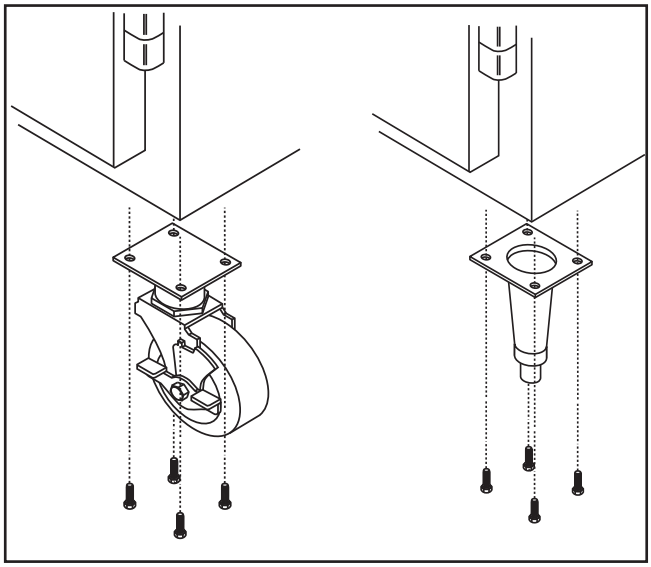

Figure 1. Leg or Caster Installation

Operation

Electronic Temperature Control

Operation:

The electronic temperature control constantly monitors box temperature as well as evaporator coil temperature to maintain consistent product temperatures. The control also sends temperature readings to the digital temperature display. The control circuits continually self-check and if an error occurs, the digital display will switch from temperature read-out to error read-out, i.e. E 1. Even when an error is displayed, the refrigeration and controls system should continue to function, however not at optimal performance. Whenever the display has an error read-out, Delfield Service should be contacted.

At initial start-up or anytime power is disconnected, then reconnected to the unit, the control will delay all operations for a short time (up to 10 minutes.) While in this delay period, the control initializes the control parameters and confirms that the temperature sensors and circuits are operational. The digital temperature display will not display temperature OR errors until the self-check is complete and the control has switched on the evaporator fan motor, compressor and condenser fan motor.

IMPORTANT NOTE REGARDING FREEZERS: After initializing, the control will immediately enter a DEFROST mode and the display will read DEF. The compressor and condenser fan as well as the evaporator fan will remain off until initialization defrost is complete. This initial defrost cycle may take up to 15 minutes to complete, at which time the freezing cycle will begin. The display will continue to read DEF for an additional 30 minutes before displaying temperature.

Temperature Alarm:

The alarm will flash "HI" or "LO" 90 minutes after the unit has reached its alarm temperature point or after any power interruption if the temperature is above or below the alarm set points. Refrigerators are factory set at mid-range to maintain about 38ºF (3ºC) box temperature. The high refrigerator temperature point is 50°F (10°C). The low refrigerator temperature point is 25°F (-4°C). Freezers are factory set at mid-range to maintain about 3ºF (-18ºC) box temperature. The high freezer temperature point is 20°F (-7°C). Freezers do not have a low temperature point.

Refrigerator:

The control is located in the control box in the top of the refrigerator behind the removable louvered panel on the left side. It is factory set at mid-range to maintain about 38˚F (3˚C) box temperature. To adjust for colder temperatures, turn the knob clockwise. For warmer temperatures, turn the knob counter-clockwise. Turn the knob fully counter-clockwise to turn the refrigeration system off. Never turn the knob more than 1 dial number and always allow 8 hours for temperature stabilization before making any additional adjustments.

Freezer:

The control is located in the control box in the top of the refrigerator behind the removable louvered panel on the left side. It is factory set at mid-range to maintain about -3˚F (-18˚C) box temperature. To adjust for colder temperatures, turn the knob clockwise. For warmer temperatures, turn the knob counter-clockwise. Turn the knob fully counter-clockwise to turn the refrigeration system off. Never turn the knob more than 1 dial number and always allow 8 hours for temperature stabilization before making any additional adjustments.

Power Switch

Select units are equipped with a power disconnect switch located next to the energy saver switch and thermostat control knob. Switch must be in the "on" position for the unit to operate. On freezers, if the switch is turned off, then returned to the on position, the unit will enter a defrost cycle and the display will read "Def."

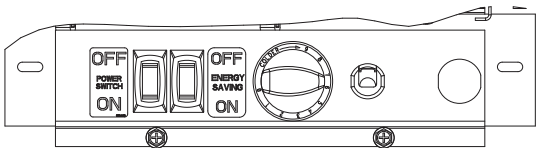

Energy Saver Switch

The energy saver switch is a rocker switch located next to the thermostat knob that controls the amount of heat applied to the door perimeter. The normal operating position for this switch is the ON position, providing the least heat. If excessive condensation is observed on the door opening, press the energy saver switch to the OFF position, to increase the amount of heat (red portion of the rocker switch will be visible).

Refrigeration & Defrost Cycle

Refrigerator:

Whenever the refrigerator is plugged in, and the control has completed initializing, the digital thermostat will display box temperature. The temperature control will cycle the compressor, evaporator fan motor and condenser fan motor to maintain box temperature at the control setting. See evaporator fan matrix for more information.

Refrigerator Defrost

The temperature control also monitors the evaporator temperature and will turn off the compressor and condenser fan motor when needed to allow accumulated frost on the evaporator to clear. During this defrost cycle, the digital temperature display will read dEF. After the defrost cycle is complete, the temperature control will return to a normal cooling cycle, but the display will continue to read dEF until the evaporator returns to normal cooling temperatures (up to 30 minutes).

Operation, continued

Freezer:
Whenever the freezer is plugged in, and the control has completed initializing including the initial defrost cycle (also see Electronic Temperature Control Operation, on this page). The digital therostat will display box temperature. The temperature control will cycle the compressor, evaporator fan motor and condenser fan motor to maintain box temperature at the control setting. See evaporator fan matrix for more information.

Freezer Automatic Defrost
The control also monitors compressor total running time and will enter a defrost cycle after total compressor running time is greater than 4-hours since the last defrost cycle OR if evaporator coil temperature drops below -30˚F (-34˚C) (indicating excessive frost on the coil).

Freezer Manual Defrost
If a manual defrost is desired, simply unplug the unit for several seconds, then plug unit back in. This will cause the control to re-initialize and then enter a defrost cycle.
When the control enters the defrost mode, it switches off the evaporator fan motor, compressor and condenser fan motor, and switches on the defrost heater to warm the evaporator coil. Thereby melting all frost accumulated during the previous refrigeration cycle. The digital temperature display will now read dEF. The control will continue the defrost cycle for a MINIMUM of 8 minutes and a MAXIMUM of 30 minutes depending on the amount of frost accumulated on the evaporator coil.

After the defrost cycle is complete, the control returns to a normal refrigeration cycle, however the evaporator fan motor will not switch on for 2 minutes AFTER the compressor and condenser fan motor have begun operating. The digital temperature display will continue to read dEF until the evaporator has returned to normal freezing temperatures (up to 30 minutes).

Service Alert
During normal operation the evaporator fan may cycle and/or pulse independently of the compressor. Consult the service manual or contact Technical Support at 1-800-733-8829 if you are unsure of the proper function.

Evaporator Fan Matrix

	Cooling Cycle				Defrost Cycle	
	Compressor On		Compressor Off		Compressor Off	
	Evap Fan On	Evap Fan Off	Evap Fan On	Evap Fan Off	Evap Fan On	Evap Fan Off
Refrigerator	X		Cycles On 3-Min, Off 3-Min		X	
Freezer	X			X		X

Maintenance



The thermostat must be turned to OFF and the unit disconnected from the power source whenever performing service, maintenance functions or cleaning the refrigerated area.

Refrigerators and Freezers
The Delrite® ABS interior and exterior can be cleaned using soap and warm water. If this isn't sufficient, try ammonia and water or a nonabrasive liquid cleaner. When cleaning the exterior, always rub with the "grain" of the stainless steel to avoid marring the finish.

Do not use an abrasive cleaner because it will scratch the stainless steel and plastic and can damage the breaker strips and gaskets.

Cleaning the Condenser Coil
The condenser coil requires regular cleaning, recommended is every 90 days. In some instances though you may find that there is a large amount of debris and dust or grease accumulated prior to the 90 day time frame. In these cases the condenser coil should be cleaned every 30 days.
If the build up on the coil consists of only light dust and debris the condenser coil can be cleaned with a simple brush, heavier dust build up may require a vacuum or even compressed air to blow through the condenser coil.

If heavy grease is present there are de-greasing agents available for refrigeration use and specifically for the condenser coils. The condenser coil may require a spray with the de-greasing agent and then blown through with compressed air.

Failure to maintain a clean condenser coil can initially cause high temperatures and excessive run times, continuous operation with dirty or clogged condenser coils can result in compressor failures. Neglecting the condenser coil cleaning procedures will void any warranties associated with the compressor or cost to replace the compressor.



Never use a high pressure water wash for this cleaning procedure as water can damage the electrical components located near or at the condenser coil.

In order to maintain proper refrigeration performance, the condenser fins must be cleaned of dust, dirt and grease regularly. It is recommended that this be done at least every three months. If conditions are such that the condenser is totally blocked in three months, the frequency of cleaning should be increased. Clean the condenser with a vacuum cleaner or stiff brush. If extremely dirty, a commercially available condenser cleaner may be required.

Stainless Steel Care and Cleaning
To prevent discoloration or rust on stainless steel several important steps need to be taken. First, we need to understand the properties of stainless steel. Stainless steel contains 70-80% iron which will rust. It also contains 12-30% chromium which forms an invisible passive film over the steels surface which acts as a shield against corrosion. As long as the protective layer is intact, the metal is still stainless. If the film is broken or contaminated, outside elements can begin to breakdown the steel and begin to form rust of discoloration.

Proper cleaning of stainless steel requires soft cloths or plastic scouring pads.

NEVER USE STEEL PADS, WIRE BRUSHES OR SCRAPERS!

Cleaning solutions need to be alkaline based or non-chloride cleaners. Any cleaner containing chlorides will damage the protective film of the stainless steel. Chlorides are also commonly found in hard water, salts, and household and industrial cleaners. If cleaners containing chlorides are used be sure to rinse repeatedly and dry thoroughly upon completion.

Routine cleaning of stainless steel can be done with soap and water. Extreme stains or grease should be cleaned with a non-abrasive cleaner and plastic scrub pad. It is always good to rub with the grain of the steel. There are also stainless steel cleaners available which can restore and preserve the finish of the steels protective layer.

Early signs of stainless steel breakdown can consist of small pits and cracks. If this has begun, clean thoroughly and start to apply stainless steel cleaners in attempt to restore the passivity of the steel.



Never use an acid based cleaning solution! Many food products have an acidic content which can deteriorate the finish. Be sure to clean the stainless steel surfaces of ALL food products. Common items include, tomatoes, peppers and other vegetables.

Gasket Maintenance
Gaskets require regular cleaning to prevent mold and mildew build up and also to keep the elasticity of the gasket. Gasket cleaning can be done with the use of warm soapy water. Avoid full strength cleaning products on gaskets as this can cause them to become brittle and prevent proper seals. Also, never use sharp tools or knives to scrape or clean the gasket which could possibly tear the gasket and rip the bellows.

Gaskets can easily be replaced and do not require the use of tools or authorized service persons. The gaskets are "Dart" style and can be pulled out of the grove in the door and new gaskets can be "pressed" back into place.

Maintenance, continued

Doors/Hinges

Over time and with heavy use doors the hinges may become loose. If it is noticed that the door is beginning to sag, it may become necessary to tighten the screws that mount the hinge brackets to the frame of the unit. If the doors are loose or sagging this can cause the hinge to pull out of the frame which may damage both the doors and the door hinges. In some cases this can require qualified service agents or maintenance personnel.

Drain Maintenance

Each unit has a drain located inside the unit which removes the condensation from the evaporator coil and evaporates it at an external condensate evaporator pan. Each drain can become loose or disconnected from moving or bumping the drain. If you notice excessive water accumulation on the inside of the unit be sure the drain tube is connected from the evaporator housing to the condensate evaporator drain pan. If water is collected underneath the unit you may want to check the condensate evaporator drain tube to be sure it is still located inside the drain pan. The leveling of the unit is important as the units are designed to drain properly when on a level surface, if your floor is not level this can also cause drain problems. Be sure all drain lines are free of obstructions, typically food product is found blocking drain lines causing water to back up and overflow the drain pans.

Fluorescent Light Bulb Replacement

Delfield recommends that fluorescent light bulbs be recycled rather than disposed of.

Wiring Diagrams: Refrigerators

6025XL-S, 6025XL-SH

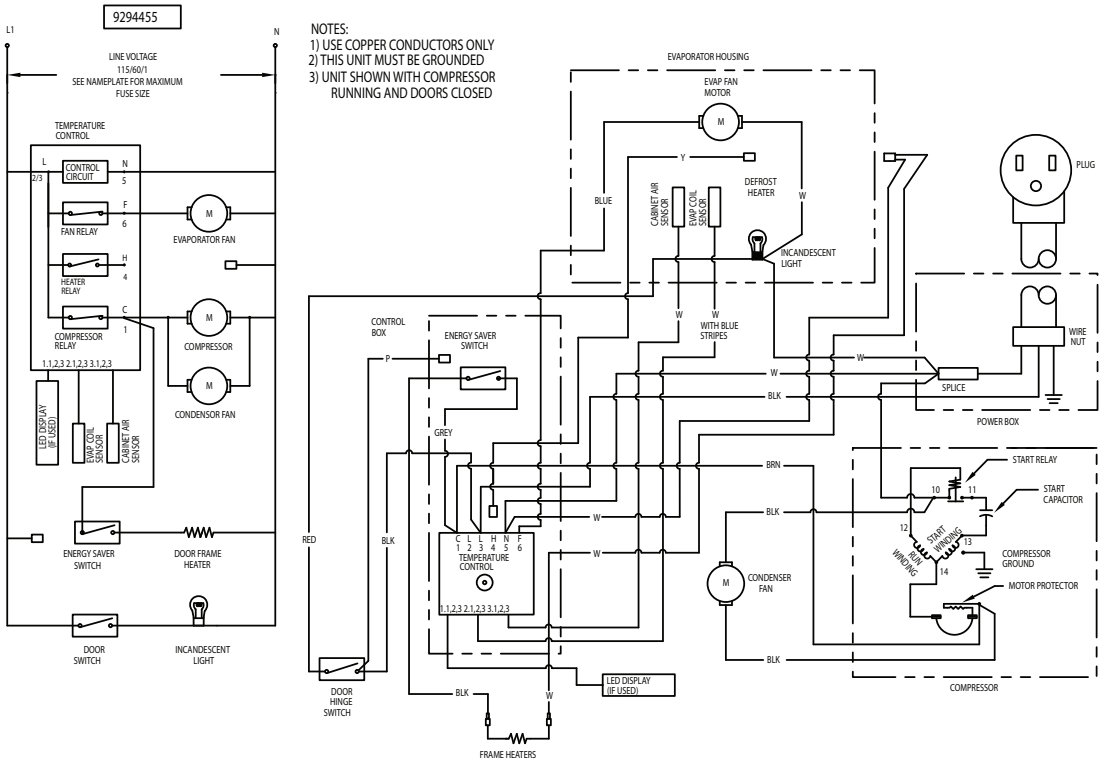

6025XL-G, 6025XL-GH

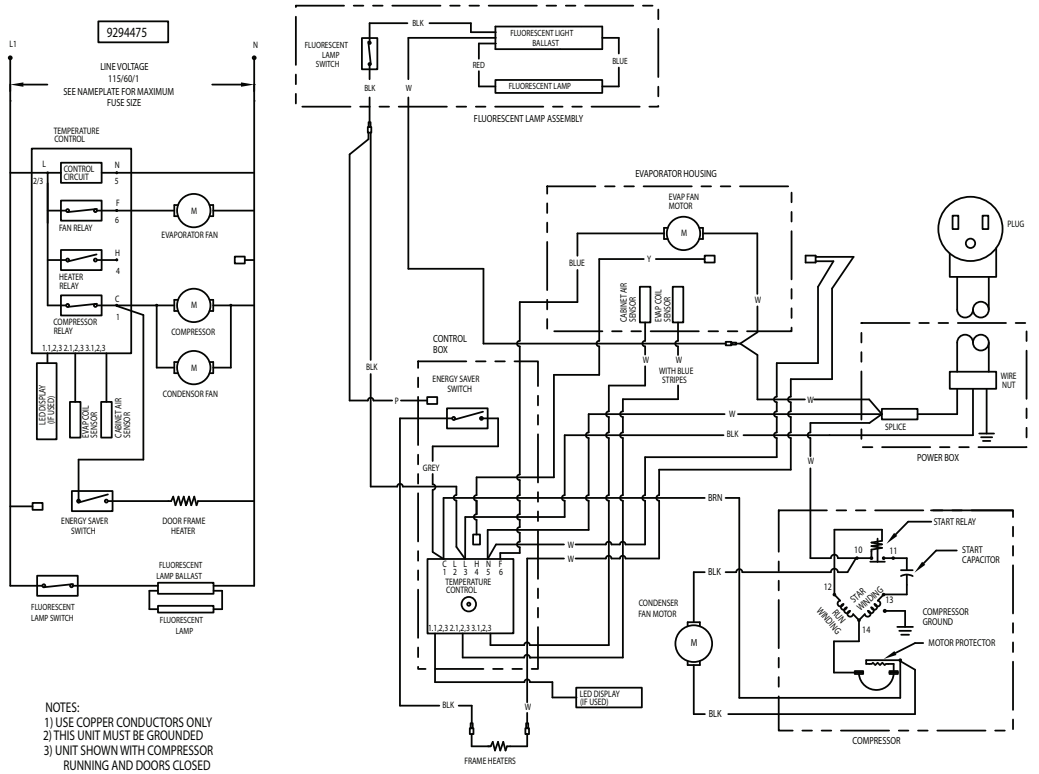

Wiring Diagrams: Refrigerators

6051XL-S, 6051XL-SH

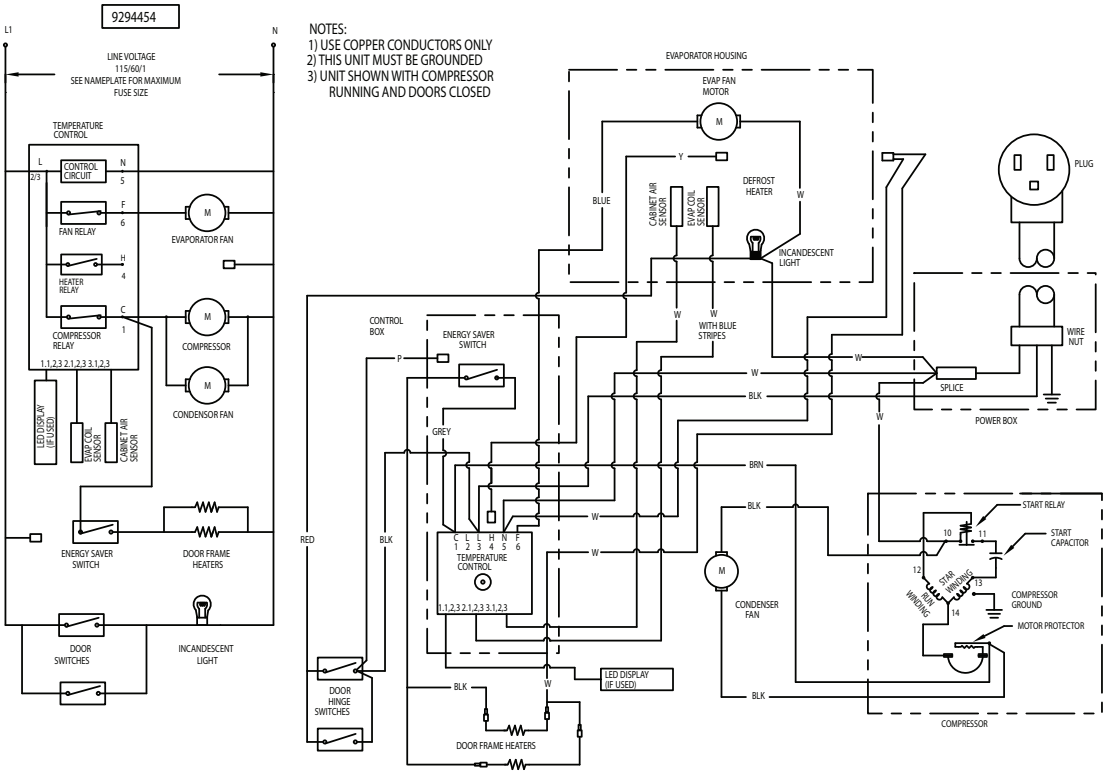

6051XL-G, 6051XL-GH

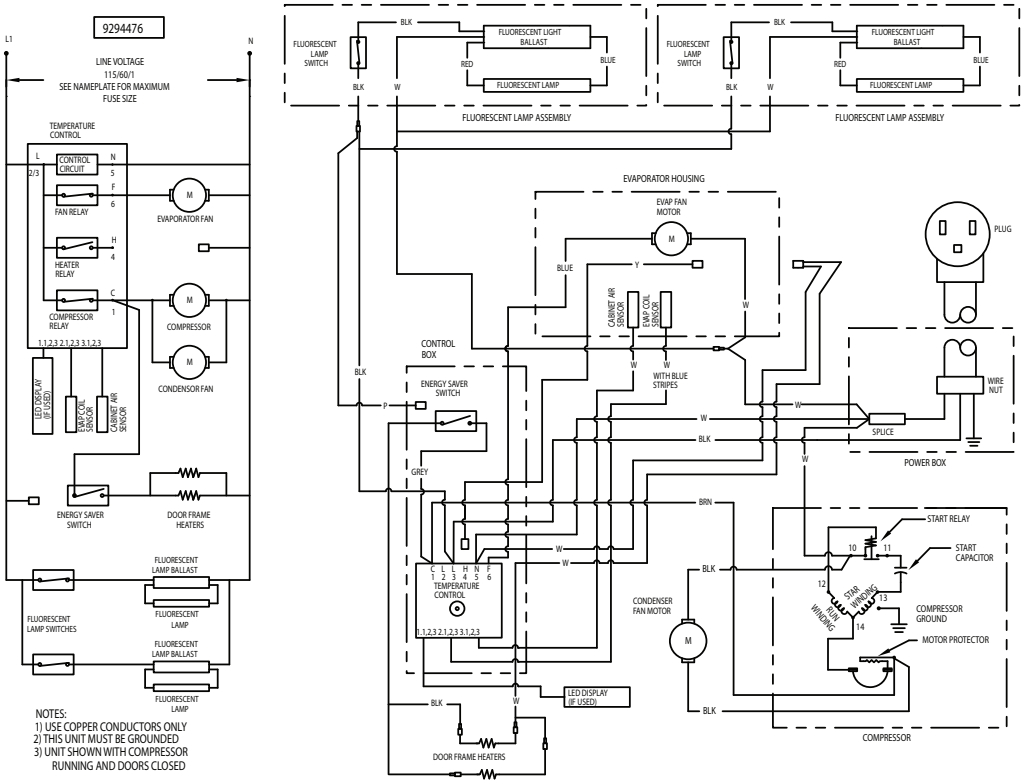

Wiring Diagrams: Refrigerators

6076XL-S, 6076XL-SH

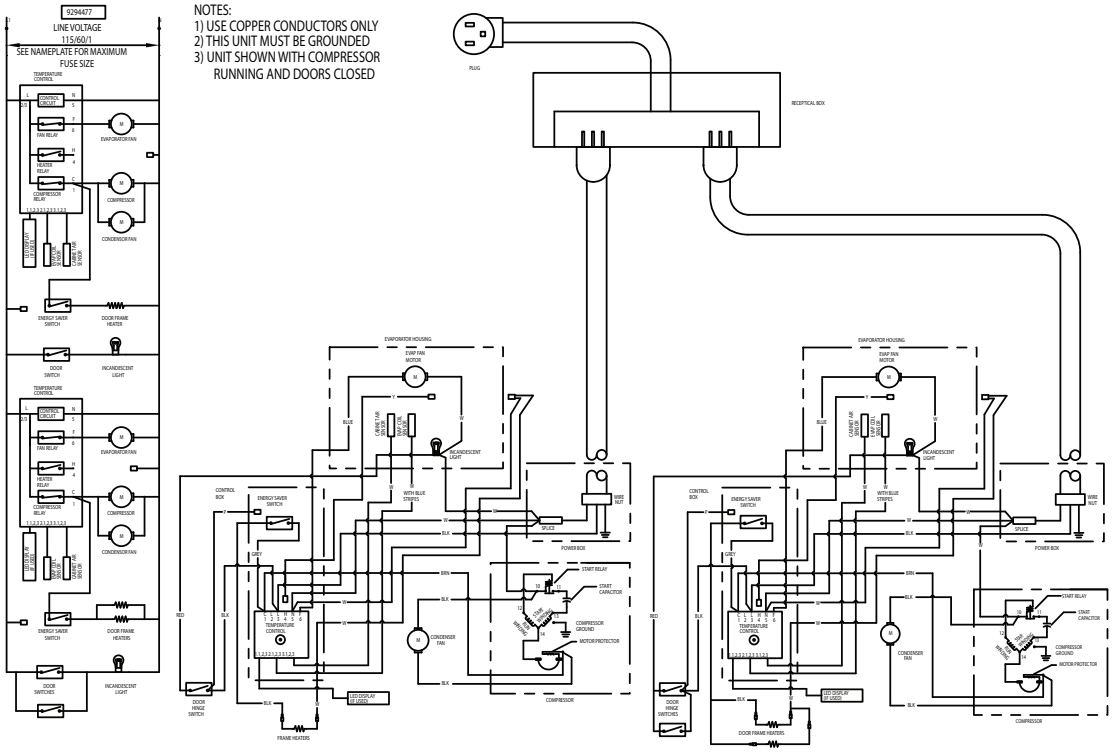

6076XL-G, 6076XL-GH

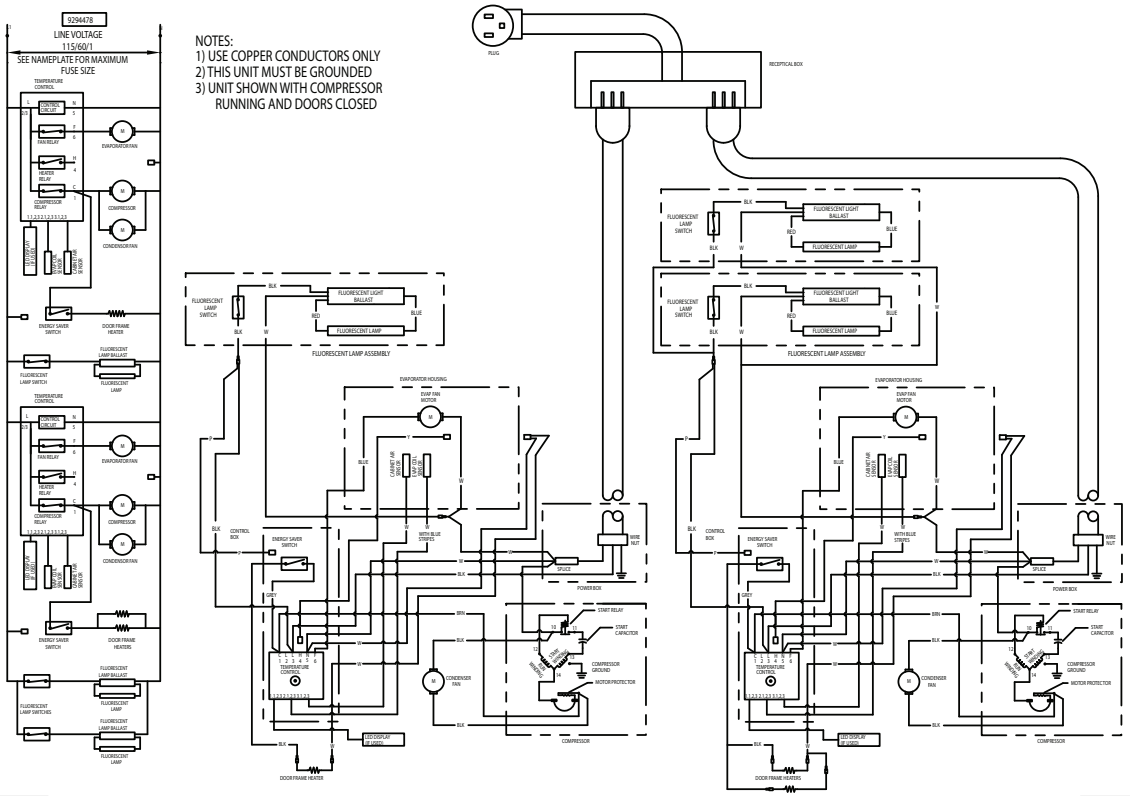

Wiring Diagrams: Freezers

6125XL-S, 6125XL-SH

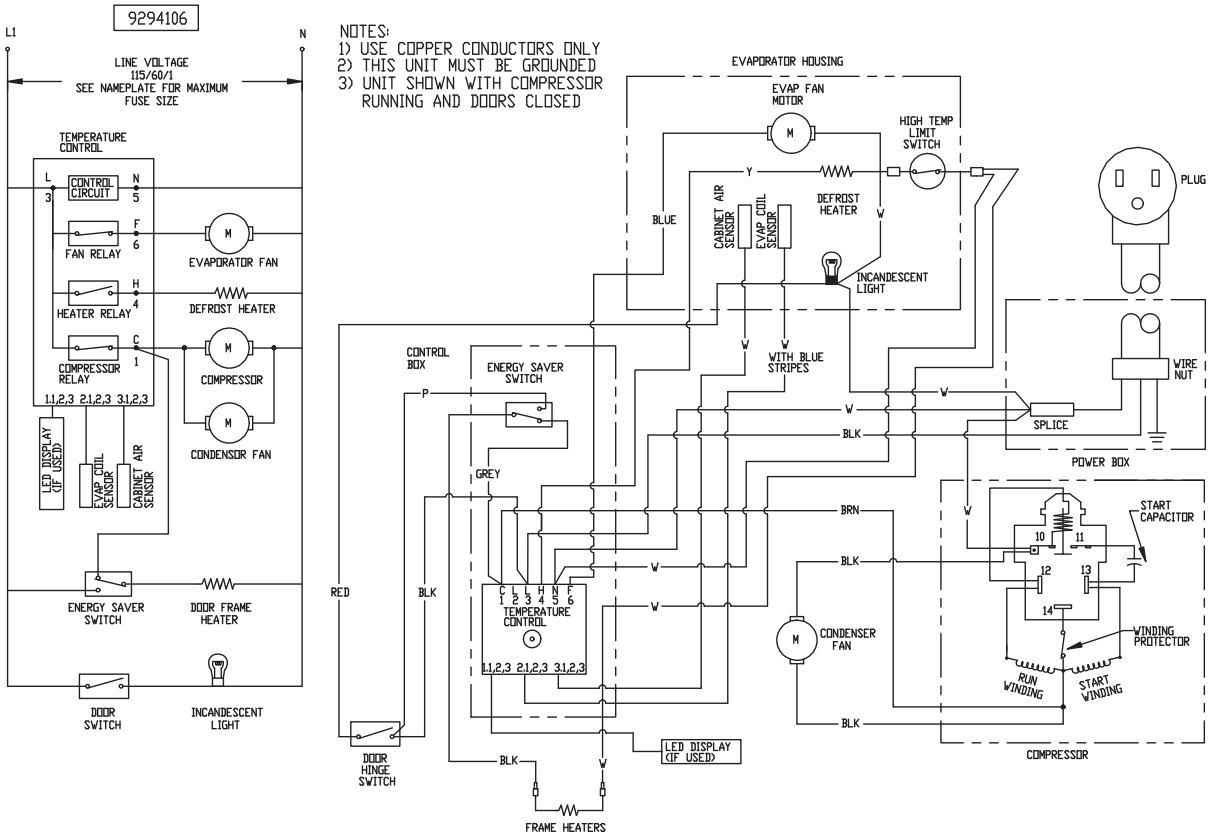

Wiring Diagrams: Freezers

6151XL-S, 6151XL-SH

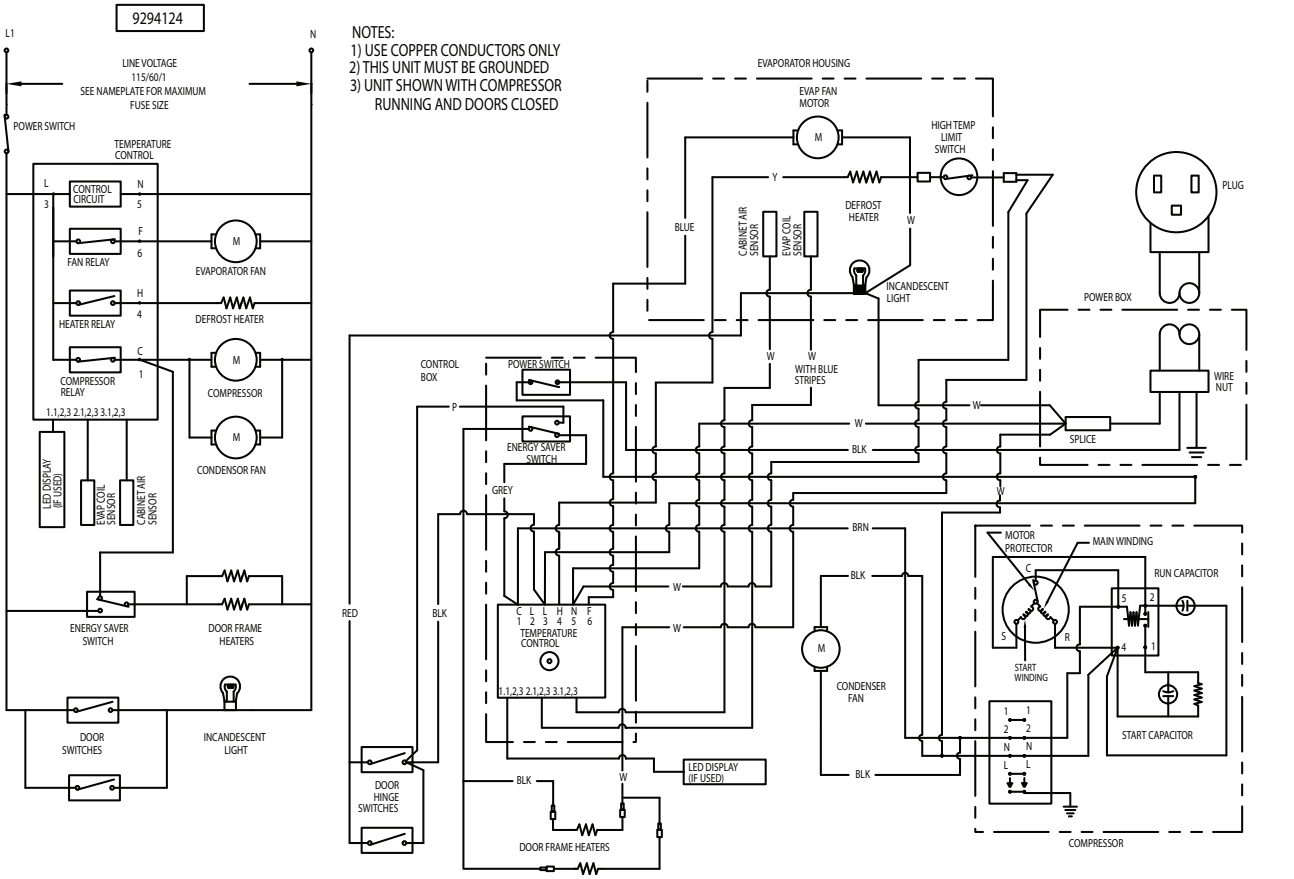

6176XL-S, 6176XL-SH

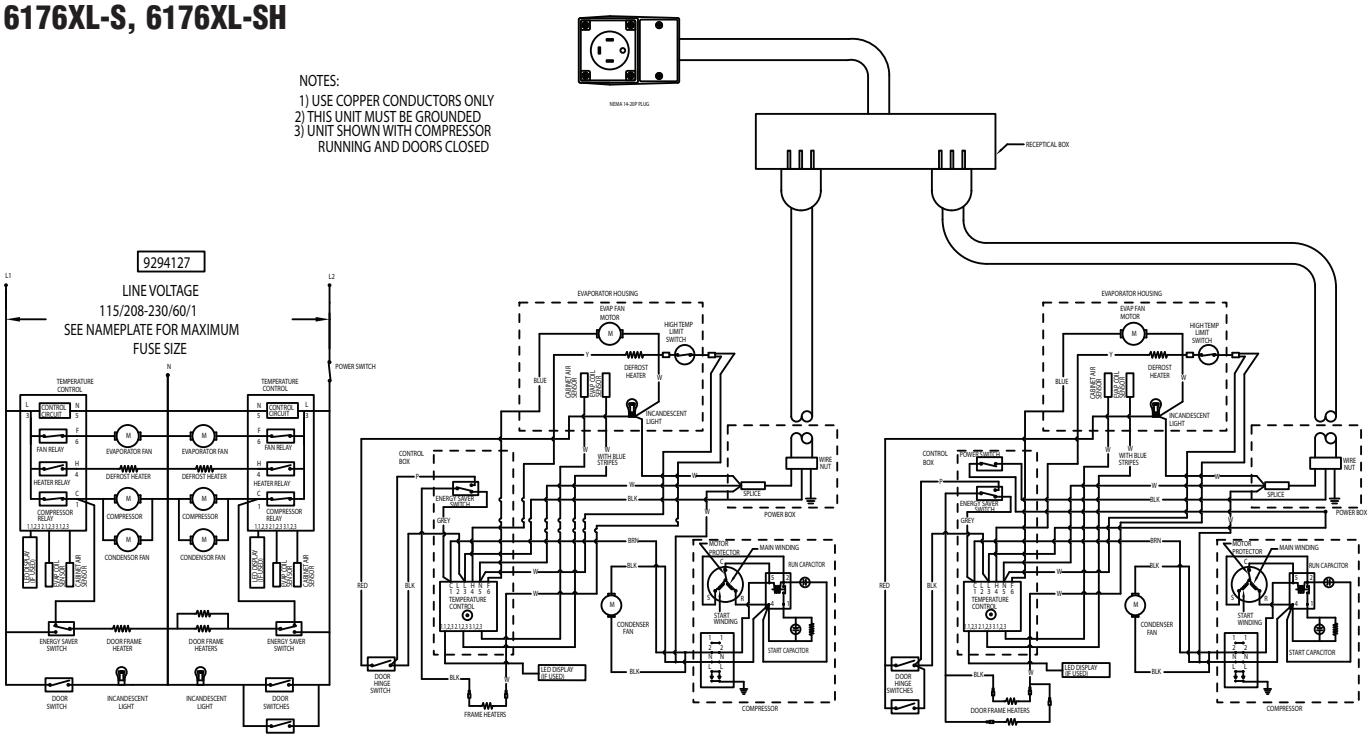

Refrigeration Package Diagram

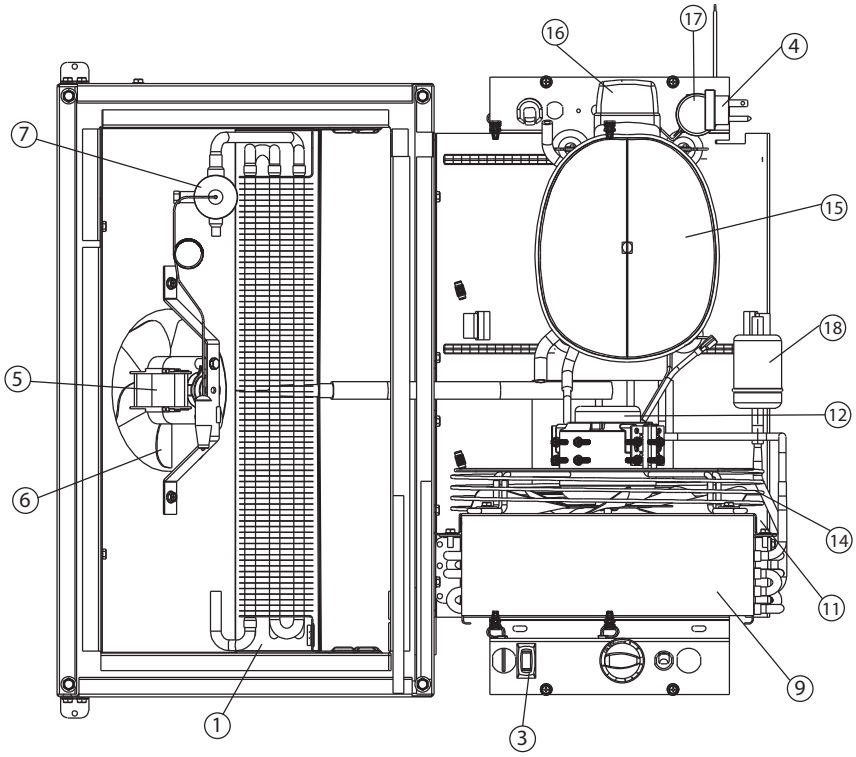

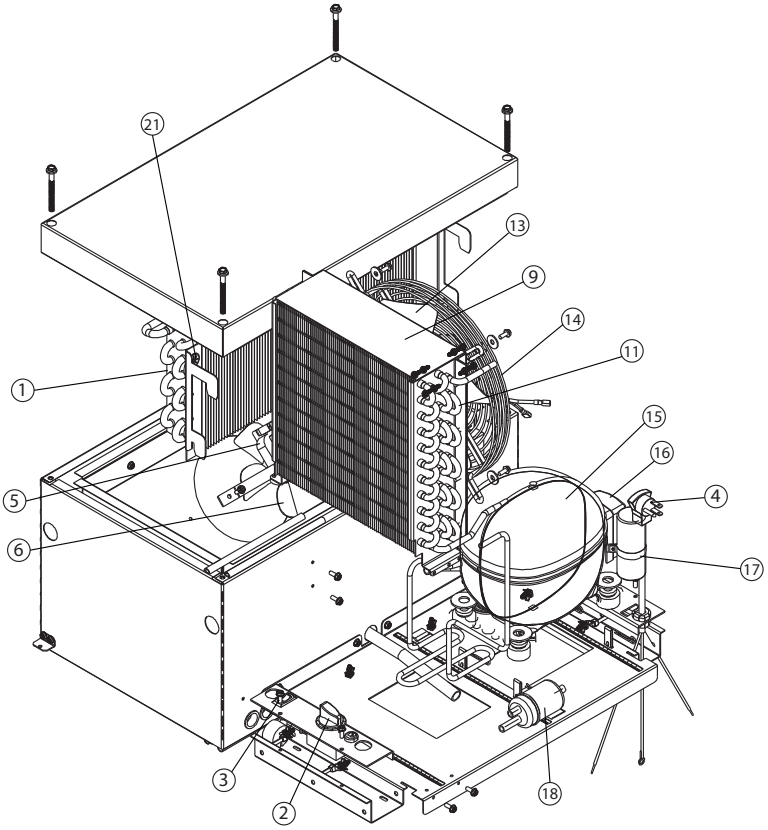

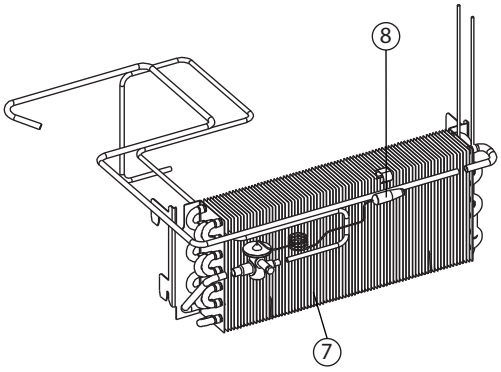

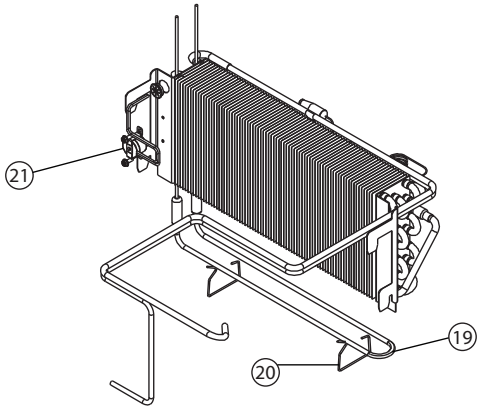

Refrigeration Package - Replacement Parts

Refrigerator - 1 section & 3 section left package

Item Number	Part Number	220V/50Hz Part#	Description
1	3516437		Coil, evaporator
2 (kit)	2194811KT	2194988KT	Temperature Control
3	2190154		Switch, energy saver
4	2184181		Cord, power
5	2162715	2162719	Motor, fan, evaporator
6	3517390		Fan blade, evaporator
7	3516429		Valve, refrigerant, TXV
8	3516205		Clip, TXV bulb mounting
9	3516427		Coil, condenser
11	127-C33-0036		Shroud, condenser fan
12	2162717	2192720	Motor, fan, condenser, 9W
13	3516432		Fan blade, condenser
14	2160019		Guard, condenser fan
15	3526999		Compressor
15		3527013	Compressor, 50Hz - NL7CUX
16	3516444		Relay & overload, compressor
16		117U6002	50Hz Relay and overload, Danfoss p/n
17	2194787		Capacitor, compressor start, 280MFD
17		117U5015	50Hz Capacitor, start, 80MFD, Danfoss p/n
18	3516322		Filter-drier, refrigerant
	1702795		Condensate pan
	3516041		Solenoid valve, used on remote units

Freezer- 1 section & 3 section left package

Item Number	Part Number	220V/50Hz Part#	Description
1	3516436		Coil, evaporator
2 (kit)	2194812KT	2194964KT	Control, ETC1, Kit
3	2194959		Switch, SPDT, energy saver
4	2184181	2194183	Cord, power
5	2162715	2162719	Motor, fan, evaporator
6	3517390		Fan blade, evaporator
7	3516588		Valve, refrigerant, TXV
8	3516205		Clip, TXV bulb mounting
9	3516427		Coil, condenser
11	127-C33-0036		Shroud, condenser fan
12	2162717	2162720	Motor, fan, condenser, 9W
13	3516432		Fan blade, condenser
14	2160019		Guard, condenser fan
15	3527001		Compressor
15		3527011	Compressor, 50 Hz - NL8.4CLX danfoss
16	3516441		Relay & overload, compressor
16		117U6019	50Hz Relay and overload, Danfoss p/n
17	2194789		Capacitor, compressor start, 240MFD
17		117U5017	50Hz Capacitor, start, 80MFD, Danfoss p/n
18	3516322		Filter-drier, refrigerant
19	2194785	2194967	Heater, defrost
20	9321629		Clip, defrost heater mounting
21	2194953		Switch, defrost safety, high limit
	1702795		Condensate pan
	3516041		Solenoid valve, used on remote units

Refrigerator - 2 section & 3 section right package

Item Number	Part Number	220V/50Hz Part#	Description
1	3516437		Coil, evaporator
2 (kit)	2194811KT	2194988KT	Temperature Control
3	2190154		Switch, energy saver
4	2184181		Cord, power
5	2162715	2192719	Motor, fan, evaporator
6	3517390		Fan blade, evaporator
7	3516429		Valve, refrigerant, TXV
8	3516205		Clip, TXV bulb mounting
9	3516427		Coil, condenser
11	127-C33-0030		Shroud, condenser fan
12	2162716	2162721	Motor, fan, condenser, 16W
13	3516433		Fan blade, condenser
14	2160019		Guard, condenser fan
15	3527000		Compressor, Kit
15		3527012	Compressor, 50Hz - SC15CLX.2 danfoss
16	3516438		Relay & overload, compressor
16		117U6003	50Hz Relay and overload, Danfoss p/n
17	2194788		Capacitor, compressor start, 320MFD
17		117U5015	50Hz Capacitor, start, 80MFD, Danfoss p/n
18	3516322		Filter-drier, refrigerant
	1702795		Condensate pan
	3516041		Solenoid valve, used on remote units

Freezer- 2 section & 3 section right package

Item Number	Part Number	220V/50Hz Part#	Description
1	3516436		Coil, evaporator
2 (kit)	2194812KT	2194964KT	Control, ETC1, Kit
3	2194959		Switch, SPDT, energy saver
	2190154		Switch, SPST, ON/OFF
4	2184231	2194183	Cord, power
5	2162715	2162719	Motor, fan, evaporator
6	3517390		Fan blade, evaporator
7	3516588		Valve, refrigerant, TXV
8	3516205		Clip, TXV bulb mounting
9	3516427		Coil, condenser
11	127-C33-0030		Shroud, condenser fan
12	2162716	2162721	Motor, fan, condenser, 16W
13	3516433		Fan blade, condenser
14	2160019		Guard, condenser fan
15	3527002		Compressor, Kit
15		3527010	Compressor, 50Hz - Sc18CLX.2, danfoss
16	3516468		Relay and capacitor, compressor start, 125MFD
16		117U6013	50Hz Relay, Danfoss p/n
17		117U5012	50Hz Capacitor, start, 125MFD, Danfoss p/n
18	3516322		Filter-drier, refrigerant
19	2194785	2194967	Heater, defrost
20	9321629		Clip, defrost heater mounting
21	2194953		Switch, defrost safety, high limit
	1702795		Condensate pan
	3516041		Solenoid valve, used on remote units

Replacement Parts

Miscellaneous Replacement Parts

Part Number	Description
2194791	Cable
3235514	Casters, rigid, One section only
3234778	Casters, swivel, w/o brake, Two & Three section
3234779	Casters, swivel, with brake
2194792	Display
3239590	Door lock
3234791	Legs
3978270	Shelf, One Section, Three Section
3978277	Shelf LH, Two Section, Three Section
3978278	Shelf RH, Two Section, Three Section
5066440	Switch, rocker, door, SPDT-D8
3516204A	Vacuum breaker

Stainless Steel Door Replacement Parts

Part Number	Description
2194005	Bulb, incandescent, 40W
2194145	Bulb, socket
000-AB9-013K	Full Door, s/s, hinged left, edge mount hinges
000-AB9-013J	Full Door, s/s, hinged right, edge mount hinges
000-AB9-013P	Half Door, s/s, bottom left, edge mount hinges
000-AB9-013R	Half Door, s/s, bottom right, edge mount hinges
000-AB9-013M	Half Door, s/s, top left, edge mount hinges
000-AB9-013N	Half Door, s/s, top right, edge mount hinges
3234617KT	Hinge, 1-5/16" offset with adjustable housing
1702796	Gasket, full door. s/s
1702797	Gasket, half door, s/s

Glass Door Replacement Parts

Part Number	Description
2198540	Ballast
2194290	Bulb, fluorescent, 18″ coated, F15T8
000-AB9-013U	Full door, glass, hinged left, edge mount hinges
000-AB9-013T	Full door, glass, hinged right, edge mount hinges
000-AB9-013Y	Half door, glass, bottom left, edge mount hinges
000-AB9-013Z	Half door, glass, bottom right, edge mount hinges
000-AB9-013W	Half door, glass, top left, edge mount hinges
000-AB9-013X	Half door, glass, top right, edge mount hinges
3234617KT	Hinge, 1-5/16" Offset with adjustable housing
1701901	Gasket, full door, glass
1701902	Gasket, half door, glass
2194289	Lampholder

Standard Labor Guidelines To Repair Or Replace Parts On Delfield Equipment

Advice and recommendations given by Delfield Service Technicians do not constitute or guarantee any special coverage.

- A maximum of 1-hour is allowed to **diagnose a defective component**.
- A maximum of 1-hour is allowed for **retrieval of parts** not in stock.
- A maximum **travel distance** of 100 miles round trip and 2-hours will be reimbursed.
- Overtime, installation/start-up, normal control adjustments, general maintenance, glass breakage, freight damage, and/or correcting and end-user installation error will not be reimbursed under warranty unless pre-approved with a **Service Work Authorization** from Delfield. You must submit the number with the service claim.

LABOR OF 1-HOUR IS ALLOWED TO REPLACE:

- Thermostat
- Evaporator/Condenser Fan Motor and Blade
- Hi-limit/Thermal Protector Switch
- Compressor Start Components and Overload Protector
- Condensate Element
- Door Jamb Switch
- Solenoid Coil
- Fan Delay/Defrost Termination Switch
- Door Hinges, Locks, and Gaskets
- Thermometer

LABOR OF 2 HOURS TO REPLACE:

- Defrost Element
- Locate/Repair Leak
- Solenoid Valve

LABOR OF 3 HOURS TO REPLACE:

- Condenser or Evaporator Coil
- Expansion Valve

LABOR OF 4 HOURS TO REPLACE

- Compressor

This includes recovery of refrigerant and leak check.

$55.00 maximum reimbursement for refrigerant recovery (includes recovery machine, pump, torch, oil, flux, minor fittings, solder, brazing rod, nitrogen, or similar fees.)

REFRIGERANTS

- R404A A maximum of $15.00/lb. or $1.00/oz. will be reimbursed.

Notes

Notes

Notes

Delfield®



Mt. Pleasant, MI



Covington, TN

Thank you for choosing Delfield!

Help is a phone call away. Help our team of professional, courteous customer service reps by having your model number and serial number available at the time of your call (800) 733-8829.

Model: _____ S/N: _____

Installation Date: _____

Manitowoc STAR CERTIFIED SERVICE AND PARTS

For a list of Delfield's authorized parts depots, visit our website at www.delfield.com

Register your Delfield warranty online. Go to www.delfield.com under the service tab to complete.

Delfield®

980 S. Isabella Rd., Mt. Pleasant, MI 48858, U.S.A. • (989) 773-7981 or (800) 733-8829 • Fax (989) 773-3210 • www.delfield.com

Delfield reserves the right to make changes in design or specifications without prior notice. ©2013 The Delfield Company. All rights reserved. Printed in the U.S.A.

DM6000XL 07/13
9294254