ENGEL

REFRIGERATOR OWNER'S MANUAL

MODEL

MR40F-G4NS

SAWAFUJI SAWAFUJI ELECTRIC CO.,LTD.

Thank you for purchasing an ENGEL refrigerator. Read this manual carefully before starting to use it. Keep this manual in a safe place for future reference. If the product is resold, this operating manual must accompany it.

CONTENTS

1 . Explanation of symbols 2

2 . Safety instructions 2

3 . Intended use 10

4 . Controller and display 10

5 . Installation and ventilation 11

6 . Operation 12

6.1 Connection to 220V-240V AC 12

6.2 Connection to 12V or 24V DC battery 12

6.2.1 Connection to 12V DC cigarette lighter socket 12

6.2.2 Onboard direct wiring with optional kit 13

6.2.3 Wiring diagram of dual battery hookup 15

7 . Maintenance of refrigerator 16

7.1 Cleaning interior and door 16

7.2 Defrosting 16

7.3 Caution about fuse and replacement 17

8 . Trouble shooting 18

9 . Disposal 19

10. Warranty 19

11. Before initial use 20

11.1 Installation of handles 20

11.2 Reversing door-swing direction (MR40F-G4NS) 20

12. Power cord List 21

13. Technical data 22

1. Explanation of symbols

The following symbols are used in this OWNER'S MANUAL or on the refrigerator.

⚠ **WARNING**	Failure to observe this instruction can cause fatal or serious injury.
⚠ **CAUTION**	Failure to observe this instruction can lead to injury.
ⓘ **NOTICE**	Failure to observe this instruction can cause material damage and impair the function of the product.
⚠ **WARNING**	Risk of fire insulation blowing gas. (CYCLOPENTANE)

2. Safety instructions

Read this manual carefully before starting to use the refrigerator. These instructions are safety measures for preventing accidents.

⚠ WARNING

- This refrigerator can be used by children age 8 and above and persons with reduced physical, sensory or mental capabilities or lack of experience and knowledge if they have been given supervision or instruction concerning the use of the refrigerator in a safe way and understand the hazards involved.
- Children shall not play with the refrigerator. Always keep and use the refrigerator out of the reach of children.

- Cleaning and user maintenance shall not be made by children without supervision.
- Do not store explosive substances such as aerosol cans with a flammable propellant in this refrigerator.
- Never expose the refrigerator to rain.
- The refrigerator is suitable for camping use.
- Do not put a water-filled container. Water if spilled will degrade the insulation of electric components and may lead to a fire from electric leak.
- If the cable is damaged, it must be replaced to prevent the possibility of electric shock. It must be replaced with a new cord (ENGEL genuine products).
- Do not touch the inside and other metal parts of the cabinet with wet hands, as this may cause frostbite.
- Do not contact metal parts with positive terminal of battery.
- Cyclopentane is used as in the insulation. The gases in insulation material require a special disposal procedure with the applicable disposal regulations.
- Never disassemble the refrigerator by yourself. Inadequate repairs may lead to considerable hazards.
- To avoid burnout of wiring from battery to the refrigerator when a short circuit, install a 10A fuse in the wiring circuit, nearby the battery.
- Use the DC cord originally accompanying the refrigerator when operating it on DC. Be sure to fully insert the cigarette lighter plug into the socket. Failure to do so may lead to distortion of the socket and/or a fire due to overheating from loose connection.

- When replacing a fuse equipped inside the cigarette lighter socket, always use the Engel-exclusive fuse for replacement. Never use a wire or a lead instead. Doing so may lead to a fire from overheating.
- The fuse equipped inside the cigarette lighter plug has a direction indicated by the arrow printed on it. Make sure the arrow points to the right direction when replacing the fuse. Failing to do so would not let the fuse to blow when overheating, resulting in deformation of the plug and/or a fire.
- When the cigarette lighter plug comes in contact with water or salty substance, be sure to thoroughly wipe it off. Take extra caution when wiping off the head terminal of the plug. Water and salty substance, if remained on the tip of the cigarette lighter plug, will result in rust, causing poor conductivity and abnormal overheating and possibly lead to deformation of the plug and/or a fire.
- Do not touch the metal tip of the cigarette lighter plug. The whole body of the cigarette lighter plug becomes hot during operation even if the plug is securely inserted into the socket. The metal tip in particular will become hot enough to burn your finger.
- This refrigerator runs on both AC i.e. from wall outlet and DC such as battery. Do not attempt to run it on any voltage above the specified voltage, nor use it with any power source not specified here. Failing to comply will result in product failure or lead to a fire.
- When operating on AC, do not plug in to an extension cable or put too many plugs into one socket. Failure to comply will result in electric shock or a fire.
- When operating on AC, be sure to plug in securely. Poor

connection will result in electric shock or a fire.

- Clean the AC cord plug to remove dust from the terminals and their base. Dust on the plug will lead to a fire or electric shock from degraded insulation.
- Do not attempt to hang on the refrigerator door. Do not sit on the refrigerator while the door is open. Doing so may lead to injuries due to tumbled refrigerator or your fingers being caught in the door.
- Do not put heavy objects on the refrigerator. Doing so may lead to injury from falling objects when the door opens.
- Be sure that no part of the refrigerator body is pushing its power cable to bend it hard. The cable, when bent hard, may get damaged and lead to overheating and a fire.
- When positioning the appliance, ensure the supply cord is not trapped or damaged.
- Do not locate multiple portable socket-outlets or portable power supplies at the rear of the appliance.
- Avoid using flammable sprays near the refrigerator. The electrical contacts may catch a fire.
- When using the refrigerator in a trunk of the car, keep adequate ventilation. Failing to do so may overheat and damage the refrigerator and possibly lead to a fire.
- Do not store objects that require precise temperature control such as medicine and scientific specimens. This refrigerator is not suited to store such types of objects.
- When there is a leak of utility gas around you, do not touch the refrigerator or its cable plug. Open the windows and maintain good ventilation. Failing to do so may lead to a fire and/or a burn from explosion.

- When operating on a floor, securely fix the refrigerator so that it would not fall and cause injuries when encountering vibration such as earth quake.
- While the refrigerator is in operation, do not use a quick charger to charge the battery that is supplying power to the refrigerator. The high voltages generated from the charger may damage the refrigerator and lead to a fire.
- Do not damage or modify or bend hard or pull or twist or bundle the power cable. Do not have the power cable caught under or pinched with heavy objects. Doing so may damage the cable and possibly lead to a fire or electric shock.
- Do not use the refrigerator if its power cable is damaged or the catch of its plug is loose. Failing to comply may lead to an electric shock or short or fire.
- Do not use the refrigerator near a heated object or gas equipment. Doing so not only reduces cooling performance but would cause a fire when leakage of the utility gas.

⚠ CAUTION

- Disconnect the refrigerator from the AC before cleaning and servicing it as well as after each use.
- Pay due attention to the polarity of the cigarette lighter plug; the center terminal must be connected to the positive line while the side contacts to the negative or earth.
- Be careful not to drop the refrigerator when carrying it. The refrigerator will be damaged if dropped and may also lead to injuries of yourself.
- Do not put fingers between the lid and body of the refrigerator. Doing so may lead to injuries when the door closes.

- Do not put living things such as pets in the refrigerator.
- Do not attempt to open or close the refrigerator door while driving a car. It may lead to an accident due to distracted driving.
- This refrigerator is suitable for cooling food. If you wish to cool medicines, check if the cooling capacity of the refrigerator is enough.
- Never use a battery charger or transformer or rectifier or battery eliminator or AC/DC converter to power the refrigerator. Doing so may damage the refrigerator.
- Never connect the refrigerator directly to the DC output of an engine generator set. Doing so will lead to poor cooling and may also damage the refrigerator due to the high voltages and surge pulse from the generator set. Utilize the AC output of an engine generator set, the AC output must be automatic voltage regulated. Contact your ENGEL dealer if there is any question regarding the use of engine generator set to power the refrigerator.
- The pair of handles accompanying the refrigerator shall be securely fixed to the refrigerator. Poor installation may lead unexpectedly dropping the refrigerator during transportation, which may result in damage to or failure of the refrigerator and possible cause of injuries.
- Do not put a bagged cold pack whose inner material is leaking. Some of off-the-shelf bagged ice packs contain a type of chemical that corrodes the metal parts of the refrigerator. If such chemical is spilled in the refrigerator interior, wipe it off with a wet, soft cloth and wipe off again with a dry cloth.
- It is recommended to turn off the refrigerator when the

vehicle engine is shut off so as to keep the battery from running out.

- Take extra caution when transporting the refrigerator.
- If you wish to install and continuously use the refrigerator in a vehicle for commercial purposes, permanent vehicle installation and wiring is recommended as it would keep the cigarette lighter plug from being overheated and deformed. Refer to 6.2.2 Onboard direct wiring with optional kit also consult the Engel dealer nearest to you as needed.

ⓘ NOTICE

- Check if the voltage noted on the type plate on the refrigerator matches the one applied by an external power source.
- If the voltage at the DC input terminals of the refrigerator falls below 11V, cooling performance will immediately decrease. Always keep the battery in good condition to ensure it is fully charged.
- Do not pull the wire of the cigarette lighter plug to when removing it from the socket.
- If used onboard a vehicle, fix the refrigerator firmly to the interior of the vehicle. Failing to do so may lead to injuries from a falling or moving fridge during abrupt acceleration and braking.
- Never use this refrigerator inside a refrigerated compartment of a refrigeration truck, where condensation easily occurs and water would drip onto the refrigerator and damage it.
- Careful putting glass bottles in the refrigerator.This may result in breakage of bottles due to external shock or vibration.

- Do not set the temperature setting knob at "5" except when storing frozen products such as frozen food, ice cream and ice. Doing so may result not only in beverages being undrinkable but explosion of cans and possible injuries.
- Do not use a knife, a screwdriver or any sharp object to remove frost from the refrigerator.
- Do not pour water in the refrigerator. Doing so will result in failure from water ingress into the insulation material or mechanical and electrical components. If water collects in the cabinet, wipe it off with a soft cloth.
- The refrigerator needs an adequate ventilation for optimized cooling performance. Insufficient space between the refrigerator and adjacent walls may reduce the cooling performance.
- To keep the battery from running out, unplug the cigarette lighter socket of the vehicle when the refrigerator is not in use.
- Food shall be kept in its original package or put in other suitable container when stored in the refrigerator.
- Overstuffing the refrigerator will result in insufficient cooling from poor circulation of cool air and may spoil the stored foods. Keep some spaces between the foods.
- Hot or warm food such as boiled product shall be stored after it gets cool enough.
- It is recommended to pack watery food or products with excessive fragrance when putting in the refrigerator.
- Pre-cool the food and drinks before putting into the refrigerator. This refrigerator is not capable of cooling food and drink in a short time. It is also recommended to pre-cool

inside the refrigerator cabinet before putting in any food.

• When the refrigerator is in operation, do not touch food or its containers, especially those made of metal, stored there with a wet hand. Doing so may lead to frostbite or other injury.

3. Intended use

The refrigerator is suitable for use in cars, boats, caravans or RVs and is designed to operate an angle of less than 30°off level.

4. Controller and display

■ **MR40F-G4NS**

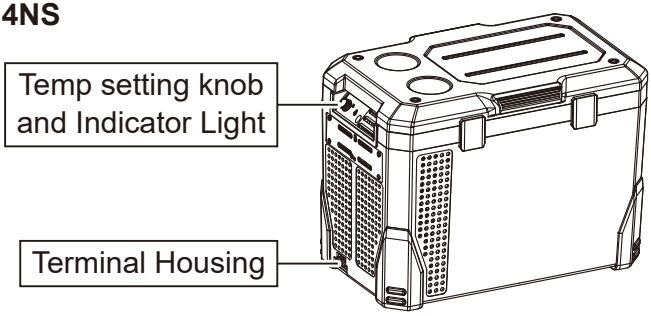

■ **Terminal Housing**

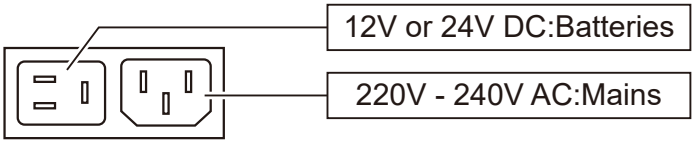

■ Temperature setting

Turn the temperature setting knob to change the air temperature inside the refrigerator.

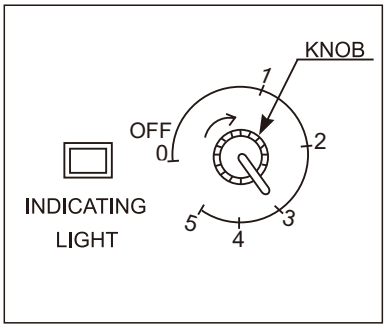

Temperature setting	Inside temperature*
0	OFF (Stop)
1	Approx. 5℃
2 - 4	Approx. 0℃ - 12℃
5	Approx. -15℃

*at an ambient temperature of 30℃ with the refrigerator door closed

5. Installation and Ventilation

The refrigerator shall be used in a dry area where there is no chance of being exposed to water splash or other types of liquids or direct sunlight or heat conducted from hot pipes, warm air outlets, cookers, etc.

The refrigerator should be positioned and secured on a solid surface in the vehicle.

Keep the refrigerator away from direct sunlight or a gas stove or heater or heat generating refrigerator.

Avoid installing your refrigerator close to hot water lines or warm air ducts.

Adequate ventilation and suitable distance from each wall (at least 150 mm) will enable optimized cooling performance and minimized power consumption.

6. Operation

Connect only to either of the following power sources:

• 220-240V AC from wall outlet (the mains)
• 12V or 24V DC battery.

AC and DC voltages may be connected simultaneously, when AC will be automatically selected if both voltages are applied.

ⓘ NOTICE

Before starting to use your new refrigerator, its interior as well as exterior shall be thoroughly cleaned with a wet cloth to avoid hygiene issue.

6.1 Connection to 220V-240V AC

This refrigerator can be connected to a standard domestic power source by using the three-core lead accompanying the refrigerator. Set the temperature setting knob to "0" (OFF). Next, Insert the plug into the input terminal housing on the refrigerator. Then, set it anywhere between 1 and 5. Turn the temperature setting knob to a required setting.

6.2 Connection to 12V or 24V DC battery

Make sure the battery voltage matches with the voltage stated on the refrigerator label. If the battery voltage is too high it will damage the refrigerator.

⚠ CAUTION

The refrigerator must be set to “0” (OFF) before connection to a DC power source.

6.2.1 Connection to 12V DC cigarette lighter socket

Insert the square moulded DC plug into the terminal housing on

the refrigerator.
The other end of the cable has a cigarette lighter plug.
Ensure that the cigarette lighter socket is clean and free from dust, corrosion or other foreign objects.
To change the plug head type, refer to (Fig.1) below.

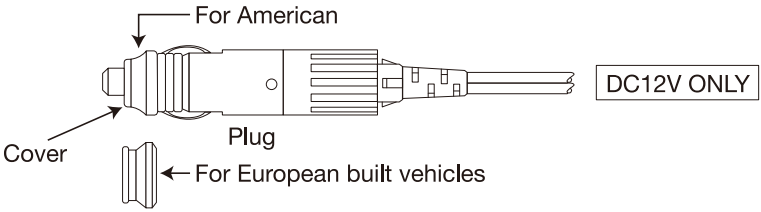

(Fig.1)

Insert the plug securely into the cigarette lighter socket to prevent it from coming loose. Loose connection may result in overheating which will damage the cigarette lighter socket.
First, set the temperature setting knob to "0" (OFF). Then, set it anywhere between 1 and 5. Turn the temperature setting knob a required setting.
To stop the refrigerator, remove the cigarette lighter plug from the socket.

⚠ CAUTION

The center terminal of the plug must be connected to the positive line while the side contacts to the negative or earth.
If reversely connected, the fuse in the plug will blow and the refrigerator will become inoperable until the fuse is replaced.

6.2.2 Onboad direct wiring with optional kit

1) Twisting lead wire
   To further reduce the radio interference during DC operation, twist the negative and positive cables (use separate cables) together into a spiral form, between the battery and the DC outlet socket.

2) Connecting refrigerator directly to battery

Any switches and lead wires for other electrical equipment should not be shared with the wiring between the refrigerator and the battery. Other equipment can generate high voltage pulses which may cause transistor damage to the refrigerator power supply. (See Fig.2)

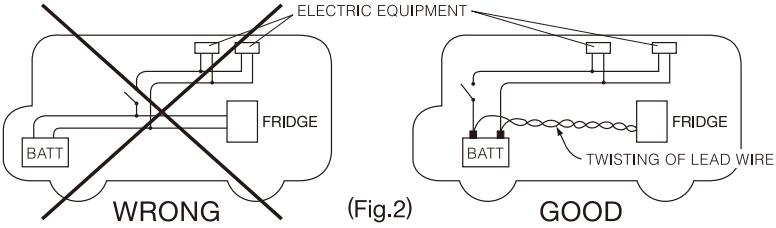

(Fig.2)

3) To prevent radio noise and avoid absorbing high surge frequency, insert a capacitor of 10000 μ-F as shown in (Fig.3) below.



(Fig.3)

4) Selecting the correct gauge for wiring is important to avoid voltage drop. Follow the chart below when wiring the refrigerator to the battery.

Distance between product and battery	Wire Gauge	
	DC 12 VOLT USE	DC 24 VOLT USE
Less than 6m (19ft.)	SWG#16 (AWG#14) / 2.1mm^2 or more	SWG#18 (AWG#16) / 1.25mm^2 or more
From 6m (19ft.) to 10m (32ft.)	SWG#14 (AWG#12) / 3.3mm^2 or more	SWG#16 (AWG#14) / 2.1mm^2 or more
More than 10m (32ft.) (Not recommended,too long)	SWG#12 (AWG#10) / 5.3mm^2 or more	SWG#14 (AWG#12) / 3.3mm^2 or more

5) Any switches and lead wire for other electrical equipment should not be shared with the wiring between your fridge and battery (other equipment sometimes generates high voltage pulses which may cause defects in the fridge power supply).

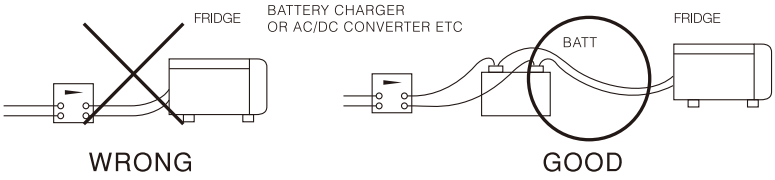

6.2.3 Wiring diagram of dual battery hookup

The wiring diagram shown below is recommended for dual battery hookup.(See Fig 4)

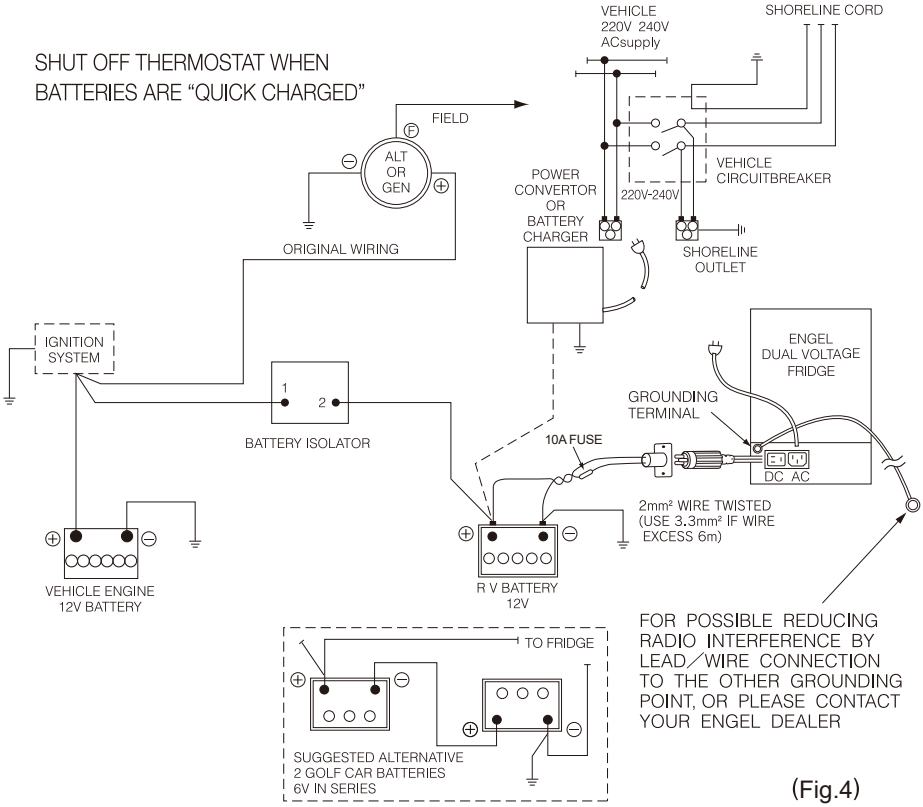

(Fig.4)

⚠ CAUTION

To avoid damage to the refrigerator in the event of reverse polarity or short circuit, install a 10A fuse in the wiring circuit nearer to the battery.

7. Maintenance of refrigerator

7.1 Cleaning interior and door

Always disconnect the refrigerator from the power source before you clean or service it.

- Clean the interior with a cloth moistened with warm water and wipe again with a dry cloth.
- Clean the door of the refrigerator with a wet cloth.
- Clean the interior condenser to remove dirt (dust etc.) at regular intervals.

ⓘ NOTICE

Never use a brush, powder soap, cleanser, acid, benzene, gasoline, or mineral thinners to clean the refrigerator, as these tend to leave scratches on the plastic coating and painting

7.2 Defrosting

Due to the humidity within the cabinet, frost will form on the evaporator surface after it has been used for a while.
Frost with as thick as 6mm or more (1/4in) will reduce cooling efficiency. To avoid this, the evaporator needs to be defrosted regularly.
To defrost, turn off and unplug the refrigerator to allow for complete removal of frost from the evaporator.

7.3 Caution about fuse and replacement

The cigarette lighter plug of the DC cord has a special thermal fuse inside which cuts off current during abnormal situations, e.g. overheated plug.

1) Remove the cover on the tip of the DC cord plug by turning it counterclockwise.

2) When removing the cover, also remove the head terminal and the fuse.

3) Pull out the fuse from the head terminal.

4) Replaced the fuse with a new one after making sure that its polarity direction is correct (Fig.5). Always use the special thermal fuse supplied through Engel dealer. The arrow printed on the fuse shall point to the head terminal as shown in Fig.5 below.

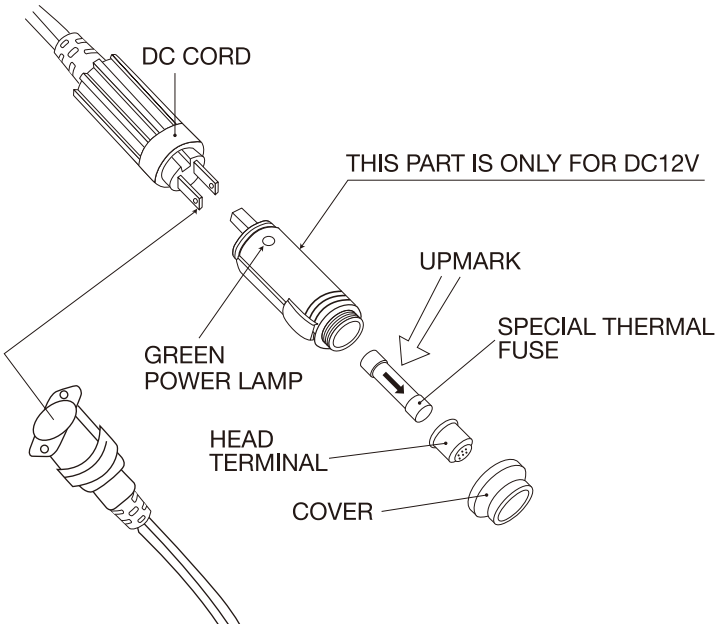

DC12V or 24V DIRECT (OPTION) (Fig.5)

5) Re-assemble the DC cord plug in a reverse order of disassembly and tighten the cover firmly.

6) Check whether the refrigerator runs normally. If you encounter any further trouble, please contact an authorized ENGEL service agent near you.

⚠ CAUTION

Do not use conventional glass tube fuses. Use only those designed exclusively for ENGEL refrigerator and distributed through its dealers.

8. Trouble shooting

Fault	Possible cause	Action
Compressor not working	No power supplied	Check if power is supplied to electronic unit.
	Battery in poor condition.	Check fuse.
	Faulty electronic unit. Electronic unit failure	Check polarity of connectors and cables.
Interior not cold	Ambient temperature too high.	Keep refrigerator sufficiently ventilated.
	Insufficient ventilation Frost on evaporator	Defrost evaporator. (see 7.2 Defrosting)
	Condenser clogged	Clean condenser.

If the problem still persists after going through the chart above, consult an ENGEL service agent. Never disassemble the refrigerator by yourself. Inadequate repairs can lead to considerable hazards.

9. Disposal

⚠ WARNING

- To prevent the risk of child entrapment inside the refrigerator, do the following before discarding it:
  -Remove the door from the refrigerator.
- This refrigerator should not be mixed with household waste when being disposed of.

  If you wish to dispose of this refrigerator, contact your local authorities and ask for the correct method of disposal, or specialist dealer for details about how to do this in accordance with the applicable disposal regulations.

  Cyclopentane is used in the insulation, which requires a special disposal procedure. Contact your local authorities to find the environmentally safe disposal of the refrigerator.

10. Warranty

The statutory warranty period applies.
If the refrigerator is found to be defective, contact either of the agents whose contact information is found on page 25 of this manual or an ENGEL agent near your location.
For repair and warranty processing, have the following documents accompany the refrigerator.
- A copy of the receipt with purchasing date
- Reason for the claim and/or description of the failure

11. Before initial use

11.1 Installation of handles

Install a pair of handles found in the interior according to the following.

■ **MR40F-G4NS**

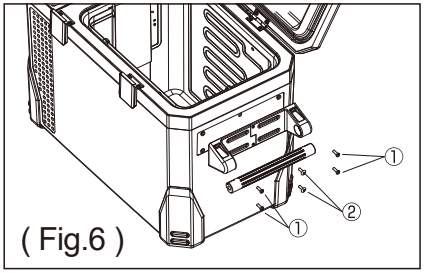

(Fig.6)

Handles can be screwed onto the sides of the refrigerator.

(Fig.6)

① Pan head screws,8 pcs

② Truss head screws, 4 pcs

11.2 Reversing door-swing direction (MR40F-G4NS)

Follow the process below to change the door-swing direction.

1) Remove the 16 screws fixing the hinges and the latches. (Fig.7)
2) Put them on the other side including the latch plates and screw them again with the door and the cabinet.

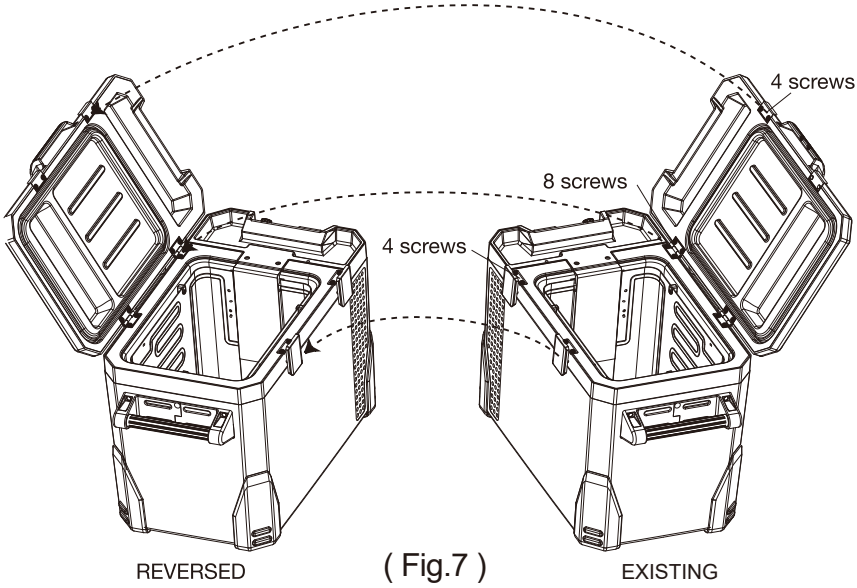

(Fig.7)

12. Power cord list

A	AC CORD	
B	DC CORD	
C	DC CORD BATTERY CORD (OPTION)	

13. Technical data

Models	**MR40F-G4NS**
Input voltage:	12/24V ⎓ and 220-240V ~ 50/60Hz
Rated current:	12V ⎓ : 2.75A 24V ⎓ : 1.6A 220-240V~: 0.37A
Cooling capacity:	+8℃ to -18℃
Energy consumption:	87 kWh/annum
Gross volume:	41L
Storage volume:	38L
Climate class:	T（+ 16℃ ~ + 43℃）
Refrigerant:	HFC-134a
Insulation blowing gas:	Cyclopentane
Sound level:	47dB (A)
Dimensions W x D x H (mm)	636 X 396 X 481mm
Weight:	24kg

ⓘ NOTICE

The ambient temperature condition of this technical data is +32°C.The internal temperature of the refrigerator varies depending on the ambient temperature.
Refrigerant HFC-134a contained in the coolant.

M E M O

M E M O

<AGENT in AUSTRALIA and NEW ZEALAND>

ENGEL DISTRIBUTION PTY LTD.

P.O. Box155 25 SILICA ST CAROLE PARK QLD 4300, Australia

Tel : 1300 302 653

E-mail : admin@engelaustralia.com.au

SAWAFUJI ELECTRIC CO.,LTD.

3, NITTAHAYAKAWA-CHO, OTA-CITY,

GUNMA 370-0344, JAPAN

TEL: +81(0)276-56-7139

FAX: +81(0)276-56-6075

(Cat. No. 5490 425 0000)

Did you know?

That you can go online to register the purchase of your Engel product.

So that you are secure in the knowledge that your purchase is covered by Engel's Australia wide service network simply go to

www.engelaustralia.com.au

and follow the links to the Online Registration and complete the form. Please note that you will also need to provide a copy of your receipt.

ENGEL

portable fridge-freezers

A LEGEND IN RELIABILITY

< CUT >

THIS ENGEL REFRIGERATOR WAS TESTED BEFORE DELIVERY.

"Our goods come with guarantees that cannot be excluded under the Australian Consumer Law. You are entitled to a replacement or refund for a major failure and for compensation for any other reasonably foreseeable loss or damage. You are also entitled to have the goods repaired or replaced if the goods fail to be of acceptable quality and the failure does not amount to a major failure."
ENGEL AUSTRALIA (Warrantor) warrant that they will repair free of cost or replace at their Capital City premises any part of the appliance which in their opinion is defective due to faulty materials or workmanship.

*Calculated from the proven date of purchase the warranty period is:

3 year: Cooling unit complete (Swing Motor, Condensor, Evaporator), Power Supply, Temperature Control Assembly, Thermistor, Fan Motor/s
1 year: Basket, Power Lead/s, Door Latch Assembly, Carry Handle/s, Cabinet Assembly

■ Specifically precluded from warranty is:

1. Damage caused as a result of connection to incorrect or fluctuating voltage supply.
2. Labour charge involved where sole cause of multifunction is a blown fuse.
3. Damage which in the opinion of the Warrantor is caused by faulty installation, normal wear and tear,misuse, dirt, neglet, accident or other similar causes.

■ The Warrantor does not accept any responsibility for:

1. Liability in respect of loss or expenses arising from the malfunction of this appliance.
2. Freight cost to our Capital City Service Centers.
3. The damage which may be incurred during transit to and from our Capital City Service Centers.
4. Repair to appliance on which modification or repairs have been carried out by persons not specifically nominated by the Warrantor as being authorized service personnel.

"Your attention is drawn to the fact that this warranty is authorized by ENGEL DISTRIBUTION PTY. LTD and cannot be varied by others.

Please staple your purchase receipt to this card. For your nearest service agent. Please call our Engel Customer Service Center Hotline on 1300 302 653

Address:	Engel Distribution Pty Ltd P.O. Box155 25 SILICA ST CAROLE PARK QLD 4300
Email Address:	**admin@engelaustralia.com.au**

Note: So that all relevant information is at hand in case of warranty repair, we suggest that this card is kept within easy reach (ie. glove box of vehicle or pocket of transit bag).

Appliance Model No. _____

Serial No. _____ **Date Of Purchase.** _____