Galanz

FREEZER/REFRIGERATOR
INSTRUCTION MANUAL

Model No.: GLF11UWEA16
GLF11US2A16

To ensure proper use of this appliance and your safety, please read the instruction manual completely before operating this appliance.

CONTENTS

Product Overview 1

Safety Warnings 2

Installation Instructions 3

Reversing the Door..... 4

Install the Handles..... 5

Operation Instructions..... 6

Packing and Moving..... 7

Maintenance..... 8

Defrost..... 8

Disconnecting the Appliance..... 9

User Notifications..... 9

Troubleshooting Tips..... 10

Specifications and Parameters..... 11

Packing List..... 12

Warranty..... 12

- Thank for purchasing our products and thank you for placing your confidence in us.
- Please read this manual carefully before using. Follow instructions and keep it for future reference.
- Please follow the operating instructions and safety notices in the manual.
- If any trouble arise, do not fix it yourself or hand it to the after sales service center which has not been authorized. Please contact the local authorized service center.

PRODUCT OVERVIEW

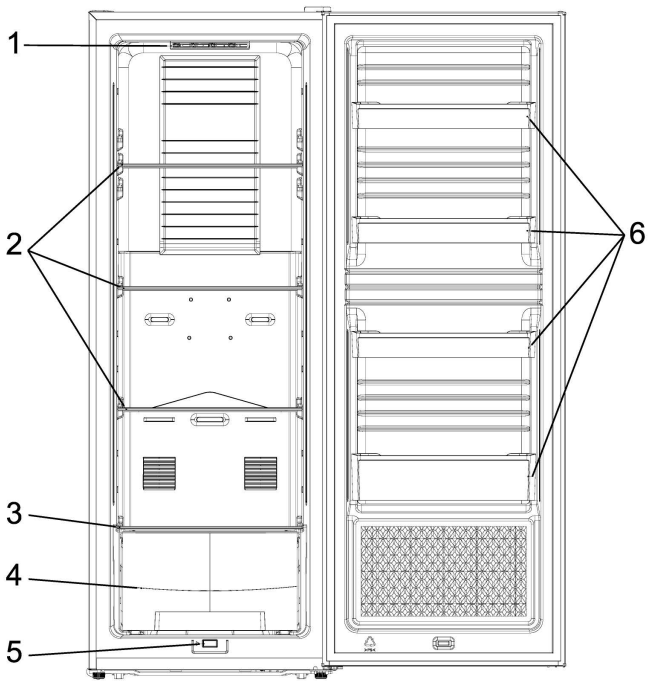

1. Control Display
2. Glass Shelves
3. Crisper Cover
4. Drawer
5. Switch
6. Door Bins

- The refrigerator you have purchased may look different from the image above as there could have been an improvement made.
- If you use the refrigerator for the first time, remove the adhesive tapes of the drawers, Remove the adhesive tapes before use.
- Do not apply too much force pulling or pushing the drawer or door bins as it could cause damages.

SAFETY WARNINGS

For your personal safety, please follow the instructions below:

1. The circuitry for refrigerator must be isolated. The area of cross section of wire must be larger than 0.75mm^2. The power plug should have its own socket, the socket must be grounded as adapter may cause the socket to overheat.
2. The voltage and frequency of this product should be 115V;60Hz. Contact with the local maintenance station or retailer if the wire is damaged.
3. Disconnect power only by pulling the power plug out of the socket directly but not by the wire.
4. Do not damage the refrigerant circuit.
5. This appliance is not intended for use by persons(including children) with reduced physical, sensory or mental capabilities, or lack of experience and knowledge,unless they have been given supervision or instruction concerning use of the appliance by a person responsible for their safety.
6. Children should be supervised to ensure that they do not play with the appliance.
7. Keep ventilation opening, in the appliance enclosure or in the built in structure,clear of obstruction.
8. Before you throw away your old refrigerator or freezer.
   - Take off the doors;
   - Leave the shelves in place so that children may not easily climb inside.
9. Do not store explosive substances such as aerosol cans with a flammable propellant in this appliance.This appliance is intended to be used in household and similar applications such as
   -staff kitchen areas in shops, offices and other working environments;
   -farm houses and by clients in hotels, motels and other residential type environments;
   -bed and breakfast type environments;
   -catering and similar non-retail applications.
10. Do not use electrical appliance inside the food storage compartments of the appliance, unless they are of the type recommended by the manufacture.
11. This appliance can be used by children aged from 8 years and above and persons with reduced physical, sensory or mental capabilities or lack of experience and knowledge if they have been given supervision or instruction concerning use of the appliance in a safe way and understand the hazards involved. Children shall not play with the appliance. Cleaning and user maintenance shall not be made by children without supervision.

NOTICE:

1. When gas leaks from its container, do not pull the plug, out or in, for it may arouse sparks and fire calamities.
2. Do not splash water on the rear of the appliance, for it may cause malfunction or electric shock.
3. Do not store inflammabe materials such as ether, benzene, LP gas and glue etc in the refrighterator.
4. Do not place bottled beverage in the freezer, so as to prevent breaking.
5. It is recommended not to place object on the top of appliance which is magnetic, heavy, or be filled with water. Electronic components may not work steadily if water gets inside. Do not store object which is costly or impressible to temperature and , e.g. serum, bacterin and so on.
6. The refrigerant of this product is R600a,which is inflammable. So, be cautious not to damage the cooling system during the transportation and installation.
7. DISPOSAL:Do not dispose this product as un-sorted municipal waste.Collection of such waste separately for special treatment is necessary.





INSTALLATION INSTRUCTIONS

1. The refrigerator should be located in a completely flat surface, leave 1.97-3.94'' (5-10 cm) between each side of the appliance and the wall, and leave 11.81'' (30 cm) between the top of the appliance and the ceiling.

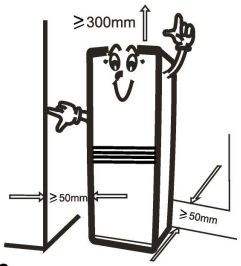

2. Choose a location which is not exposed to sunlight , high temperature or humid , as humidity may cause stain.
3. Pull out the bottom panel before installation.
4. The appliance can be adjusted by switching its two legs in the front of the bottom panel when it is unstable. Switching them in the clockwise direction can rise up the maching.

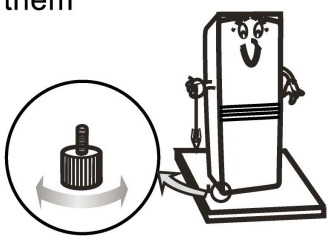

5. The location should be firm and flat. An un-securely position may cause noise and libration:
   (a)The noise may be increased if the floor is not firm.
   (b) Put a sheet under the appliance to solve the heat emission if you need to locate it onto a carpet.
6. Make sure the adjustable legs are clung to the floor, and set the appliance slope backward slightly to keep the doors closed tightly.

REVERSING THE DOOR

You can choose to open your refrigerator by the right side or the left side.
To change the way of opening, please follow the instructions below.
Important safety warning: before doing so please unplug and disconnect the appliance
In addition to the accessories packed, you will need:
Medium-sized cross screwdriver
Small screwdriver
A solid line

1. First, check to make sure the power is disconnected.
2. Open the upper door, and close the bottom door.

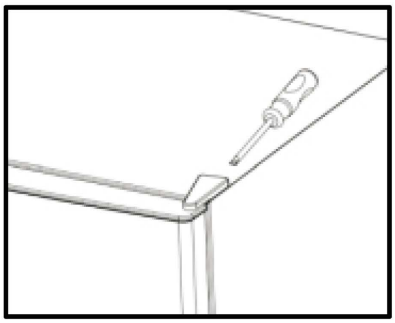

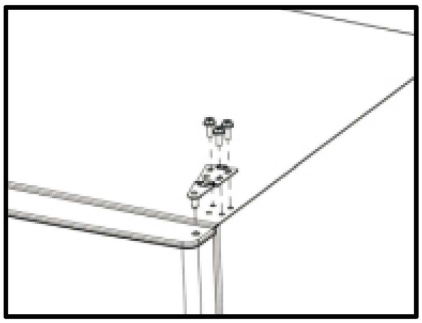

3. Remove the protective covers with a Phillips screwdriver through the back side, and save the protective covers.
4. Remove the 3 shelf-tapping screws, and save them.
5. Push the top hinge forward, remove the door and save it aside.

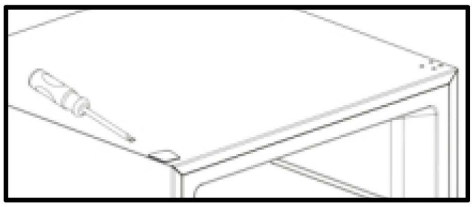

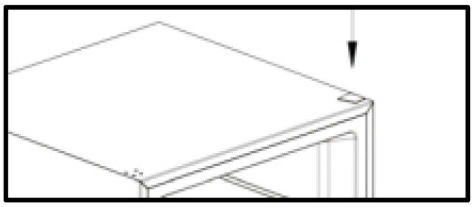

6. Pry off and remove the cover over the screw holes on the left side of regrigerator housing. Attach cover on the right side. Cover is force-fitted.

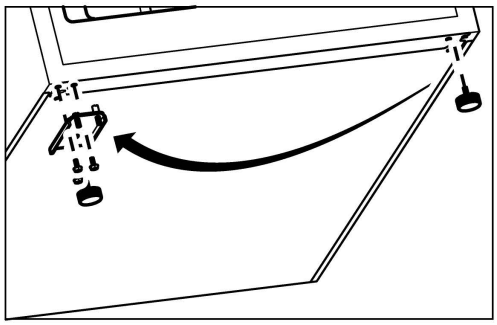

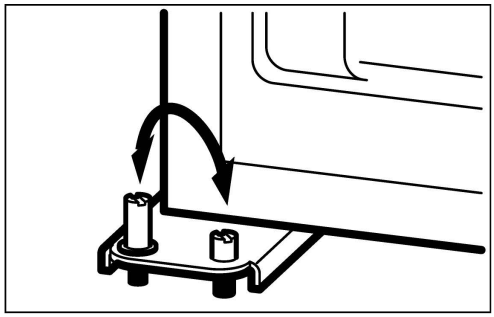

7. Push the machine slightly backward against the wall.
8. Disassemble the 2 fixed stands.
9. Disassemble the bottom hinge.
10. Assemble the bottom hinge on the other side of the machine.
11. Assemble the stands.
12. Exchange the 2 bolts and fix them on the other side.

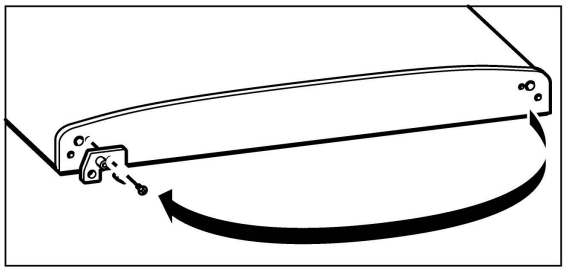

INSTALL THE HANDLES

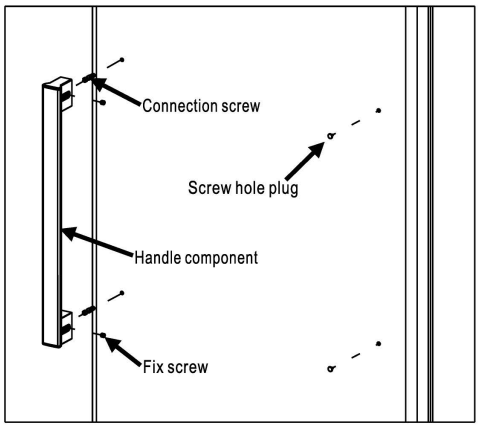

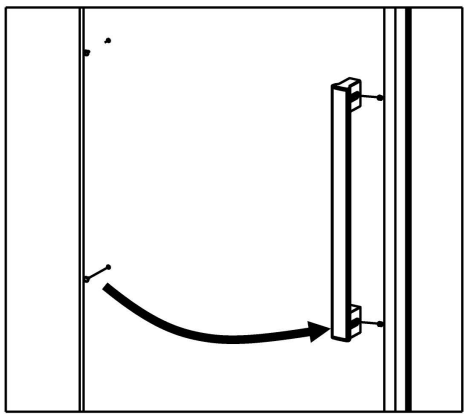

1. Use allen wrench to loose the fix screw and take out the handle component.
2. Twist out connection screw
3. Use card lift up screw hole plug and take it out.
4. Install the handle component on the right side.
5. Stick screw hole plug into the left screw hole.

OPERATION INSTRUCTIONS

1. Leave some space between items inside for air circulation.
2. Food should be kept in sealed package to prevent drying or odour.
3. Hot food should be cooled down before placing into the appliance. Otherwise, interior temperature and electronic consumption will increase.
4. Reducing the frequency of door opening can lower the electronic consumption.



Warning | Do not use any electronic equipment inside the appliance.

INSTRUCTION FOR USAGE

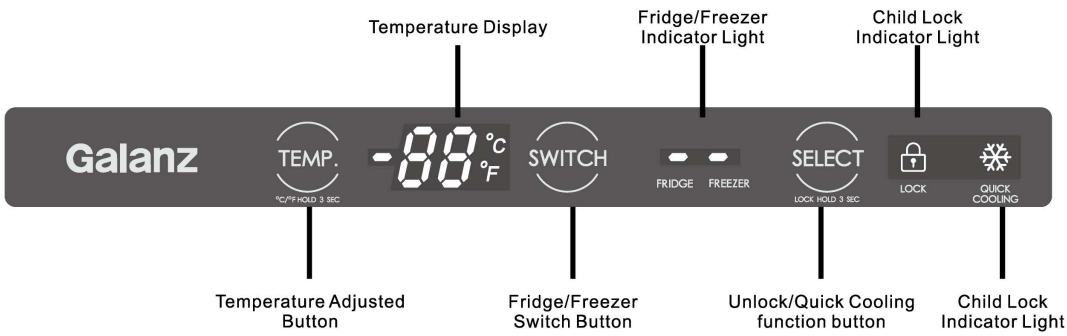

1. When the door is opened, LED display will be lit. Press“ SELECT ” for 3 seconds, the light of“ LOCK ” will be out, child lock unlocks. After the child lock is unlock, temperature can be adjusted and the mode can be switched; Stay still for 10S, “ LOCK ” light will be turned on, the child lock will be activated again;

2. After the child lock is unlock, Press“ TEMP. ”for 3 seconds, temperature display unit can be switched to Celsius or Fahrenheit, light of“ °C °F ”will be turned on according to the operation done mentioned earlier.

3. After the child lock is unlock, temperature can be adjusted by pressing “ TEMP. ” In the freezer mode, temperature adjusted ranges are from -22°C to -15°C(-8°F-5°F); In the fridge mode, temperature adjusted ranges are from 1°C to 7°C (33°F~45°F).

4. After the child lock is unlock, fridge mode or freezer mode can be switched by pressing“ SWITCH ”; when FRIDGE, the indicator light is on, fridge mode is selected, when FREEZER, the indicator light is on, freezer mode is selected.

5. After the child lock is unlock, quick cooling function is applied when“ SELECT ” is pressed, Quick Cooling function indicator light“ QUICK COOLING ” will be on; Press“ SELECT ” again, quick cooling mode can be exited manually.

P.S.:

1. As for the Quick Cooling function, it can be only selected in the freezer mode, and it can not be selected in the fridge mode.
2. In the Quick Cooling mode, the inner temperature can reach as low as -30°C(-22°F); Quick Cooling mode will be exited automatically when it is on for 24 hours continually.

PACKING AND MOVING

1. Unpacking it, repack and carry
   Please memorize the position of each accessory of the appliance when unpack it, repack the product and check carefully before transportation.



2. Do not lift or pull the door and the door handle during transportation.

3. When moving, the appliance can not be titled over 45 degrees (the angle to the vertical direction). Please avoid strong vibration and collision.

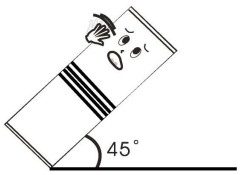

MAINTENANCE

The appliance should be maintained and cleaned frequently. For your safety, please pull the plug out of the socket before the cleaning.

1. Interior maintenance
   Clean the interior of the appliance with clean water or neutral abluent.Scour it with clean water and wipe it with a piece of dry cloth.
2. Maintenance of door gasket
   It is easy to get damaged if the door gaskets are polluted by the stain like oil, sauce and etc., so clean it with care.
3. Outer maintenance
   Wipe the dust with a piece of dry cloth, clean it with neutral abluent of necessary.
4. Lighting and its replacement
   When the refrigerating chamber door opens, the LED light turns on.
   When the light is damaged, please remove the lampshade first and then replace the LED light.
   The specific operations are shown in the following diagram:



1. Please move the lampshade and the thermostat out 3-5mm in the direction of the arrow.



2. Take out the lampshade and thermostat downwards.



3. Pull the connection terminal, use the screwdriver to remove the LED light board and replace it.

⚠ **Note:** If the LED lamp is abnormal, it should be replaced by professionals. Do not dismantle and replace it privately in order to avoid damage.

DEFROST

Defrosting of refrigerator will be executed automatically while the product is operating, so it is not required for manual defrost. The defrost water flows into the vaporization plate and will be vaporized by the heat of compressor. so its drain tube must be cleaned.

⚠ Warning | Do not use mechanical devices or other means to accelerate the defrosting process, other than those recommended by the manufacturer

DISCONNECTING THE APPLIANCE

After power failure, even in summer, the refrigerator can store food normally in several hours.

1. Discontinuation during power failure
   After power failure, do not put additional food in the appliance and reduce the frequency of door opening.Make several ices in a container if know the power failure beforehand, and put it in the top of the fridge.
2. Discontinuation during vacation
   Please fetch out the easily spoiled food in fridge before short vacation. After confirmation, close the door firmly.If have a long vacation, please fetch out all the food and cut off the power. After defrosting, clean up the liner of the appliance and wipe it dry, and leave the door open.
3. Stop using
   If the refrigerator is not going to be used for a long time, please unplug the outlet and clean up the appliance. The door should be kept open in order to prevent unpleasant smell caused by food leavings.

Attention	In a general condition, do not stop the appliance in case of affecting its life. After unplugging the power, please leave at least 5 minutes before resumption.

USER NOTIFICATIONS

1. Do not splash water on the refrigerator, as it will cause oxidation and malfunction. Electronic component such as on/off button should be wiped dryly.
2. Cleansers such as soap powder, abrasive cleaning powder, alkali cleansers, chemical cloth, thinner, alcohol, acid petroleum productand hot water should not be used to clean the refrigerator as they may damage the painted cover and plastics.
3. Smear can damage the interior plastic component, so wipe it as soon as possible.
4. Please check the points below after maintenance:
   (1) Is there any damage or loss of the electronic wire ?
   (2) Can the plug be put in the socket reliably and smoothly?
   (3) Is the plug heating unconventionally?

Warning	Please get rid of the gasket of the door before the disposal. The disposed apparatus should be handled by professional staff, as it may be harmful to the environment.

TROUBLESHOOTING TIPS

1. The refrigerator does not work
   It may not be connected to the power supply(plug, power cut or fuse); Voltage is too low.
2. The refrigerator does not work efficiently as expected
   It may be caused by heavy frost, or by warm temperature setting,or by frequently door operating.
3. It makes unusual noise
   It may be caused by an imbalance or loose ground locating the appliance, or by resonation between the appliance and other ambient objects.
4. The compressor keeps working for a long period
   The environment temperature may be too high. The doors may be opened frequently or even they are left open. The compressor running time may be extended if the temperature is set too low.
5. Unpleasant odour happens
   Food with strong odour should be packed tightly before being put inside the appliance. Please check whether there is any deteriorated item or whether the liners are left dirty for a long time.
6. Water leaks from the bottom of the refrigerator
   The drain tube is jammed. Please use a proper tool to solve it.
7. Heavy frost occurs on the rear of the appliance
   Putting humid or hot food into the appliance may cause this problem. Or it may be caused by the heavy environment moisture.
8. Switching mode from refrigerator to freezer,it takes timeto lower the temperature to desired setting. If user wants to increase the temperature in a short time, it is advised to open the door.
9. In the freezer mode, low air pressure may occur in the cabinet for a short time when the door is opened frequently, which makes the door more difficult to be opened in a second try. Do not worry, since this is a normal phenomenon. Please wait from 20 to 30 seconds, then the door can be opened easily again!

The following cases are normal operation

1. Moisture may form dew on the outside of the product during the humid season, just get it wiped.
2. The flow of refrigerant through the pipeline coil can cause a bicker.
3. It is normal that the sides of product get warm as a result of the cooling pipeline working.
4. The frame of the appliance will be warm during working by the defrost pipeline inside it.

Please check the points above first.
If the supply cord is damaged, it must be replaced by the manufacturer, its service agent or similarly qualified persons in order to avoid a hazard.

SPECIFICATIONS AND PARAMETERS

Climate class		T
Electric shock protection type		I
Capacity(cu.ft) Freezer/Refrigerator		11
Voltage(V)		120
Frequency(Hz)		60
Current(A)		1.9
Voice [dB(A)]		≤ 45
Energy consumption (Kw.h/y)	Freezer	354
	Refrigerator	249
Refrigerant		R600a/2.36oz
Weight(lbs)		128
Interior temperature (F)	Freezer	-8 ~ 5
	Refrigerator	33~45
Dimension(inch)	Width	23.58
	Depth	27.68
	Height	64.67

PACKING LIST

Parts	Number
Vegetable crisper	1pcs
Glass shelf	3pcs
Crisper glass cover	1pcs
Door bins	3pcs
Bottle guard	1pcs
Owner's manual	1 copy

Note: Products are subject to improve from time to time, any changes in parts without further notice.

Product Warranty

This warranty applies to products sold by Galanz Americas in the U.S. This warranty is in lieu of any other warranty and expressly applies to the individual product only.

Galanz product is warrantied for one year following purchase for defects in material and workmanship. **Please save your receipt as proof of purchase is required to make a warranty claim.** During this period, we will provide the replacement cost of this product, a replacement or the equivalent, or repair per our discretion.

The warranty **cannot be transferred** through resale, including the resale through a 3rd party unauthorized retailer and is only bestowed up on the original consumer purchaser upon purchase from an authorized retailer.

This warranty does not cover and excludes damage or defects caused by:

- Consumer misuse
- Abuse
- Neglect including the failure to clean and/or provide adequate regular maintenance as outlined in the user manual
- Commercial use
- Subjecting the product to any voltage outside the specified range
- Loss of parts
- The affixing of any attachments not provided with the product
- Accident, or
- Use in a manner not intended and outlined in the user manual.

Any subsequent damages caused by the above listed exclusions will not be covered and any claims determined to meet the above exclusions will be denied. All liability is limited to the purchase price and does not include any:

- Retail offered extended warranties
- Tax
- Other change (including postage to send required materials)
- Incidental and/or consequential damages associated with the product in question.

Every implied warranty, including any statutory warranty of merchantability or fitness for a particular purpose is disclaimed except to the extent prohibited by law, in which case such warranty is limited to the duration of this written warranty. This warranty gives you specific legal rights. You may have other legal rights that vary depending on where you live. Some states do not allow limitations on implied warranties or special, incidental, or consequential damaged, so the above limitations may not apply to you.

If you have a claim under this warranty, please call our Customer Service number: **1-800-562-0738**.

For faster service, please have the **model** number, **serial** number, and **receipt** ready for the operator to assist you.