S/M No. : FR631ND010

DAEWOO

Service Manual

Refrigerator

Model: FR-631ND

FR-710ND



✔ Caution

: In this Manual, some parts can be changed for improving, their performance without notice in the parts list. So, if you need the latest parts information,please refer to PPL(Parts Price List) in Service Information Center (http://svc.dwe.co.kr).

DAEWOO ELECTRONICS CO., LTD.

http://svc.dwe.co.kr Feb. 2001

SAFETY AND PRECAUTIONS

1) For starters, be sure to check any chances of the leakage of electricity

2) You could handle a part in the vicinity of electricity after unplugging

3) You should put on rubber glovers to prevent an electric shock on operation test

4) Make sure the rated current, voltage, capacity before using an instrument

5) Keep your wet hands away from the metal goods in the freezer compartment not to be frostbitten

6) Be careful not to let water to permeate the electric part in the machine room

7) with the door open during your working, you might be damaged by that door

8) You should give a tilt to the refrigerator for your safe after removing the breakable goods inside the refrigerator

9) You'd better use cotton gloves if you fix it up around the evaporator

TABLE OF CONTENTS

1. EXTERNAL VIEWS ····· 2

1-1. EXTERNAL SIZE ····· 2

1-2. NAME OF PARTS ····· 2

2. SPECIFICATIONS ····· 3

1. OUTLINE ····· 3

2-2. ELECTRIC PARTS ····· 3

2-3. POWER CORD ····· 8

2-4. DOOR COLOR ····· 9

3. OPERATION AND FUCTIONS ····· 10

4. DIAGRAM ····· 33

4-1. WIRING DIRGRAM ····· 33

4-2. CIRCIT DIAGRAM ····· 34

4-3. AIR FIOW DIAGRAM ····· 35

4-4. REFRIGENT CYCLE DIAGRAM ····· 36

5. EXPLODED VIEW AND PARTS LIST ····· 37

5-1. TOTAL EXPLODED VIEW ····· 37

5-2. TOTAL PARTS LIST ····· 38

5-3. MACHINE ROOM EXPLODED VIEW AND PARTS LIST ····· 42

1. EXTERNAL VIEWS

1-1. EXTERNAL SIZE

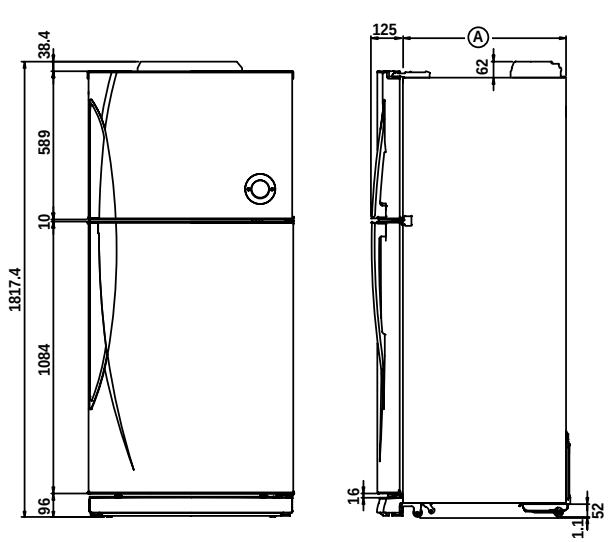

model	FR-631ND	FR-710ND
A	590	650

1-2. NAME OF PARTS

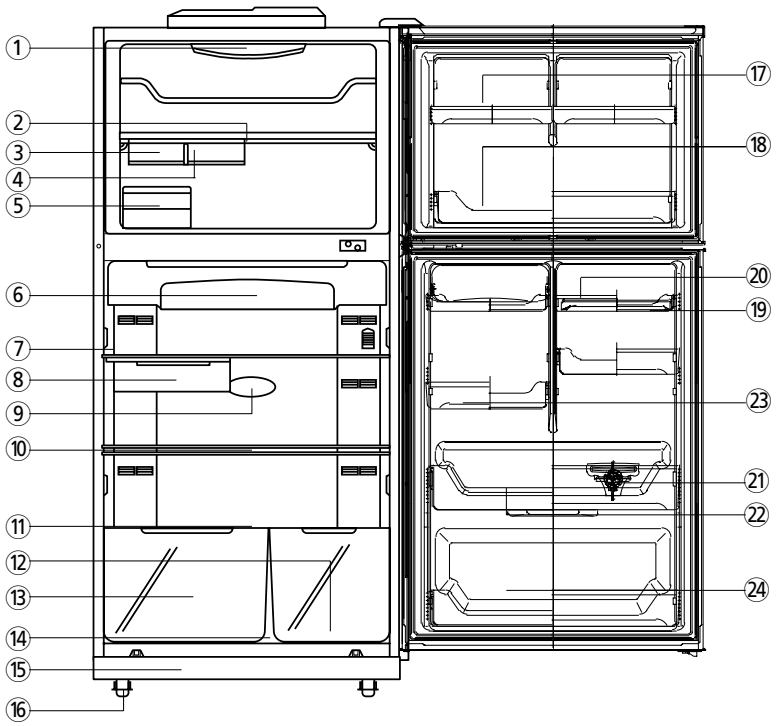

① Freezer Compartment Lamp
② Shelf Ffreezer
③ Case Icing
④ Guide Icing
⑤ Ice Box
⑥ Refrigerator Compartment Lamp
⑦ Cover Cubic Duct
⑧ Fresh Case
⑨ Shelf Refrigerator
⑩ Deodorant
⑪ Cover Vegetable
⑫ Case Vegetable(B)
⑬ Case Vegetable(A)
⑭ Guide Vegetable
⑮ Front Grille
⑯ Adjustable Foot
⑰ Freezer Pocket Top
⑱ Freezer Pocket Under
⑲ Egg Pocket
⑳ Egg Tray
㉑ Guide Bottle
㉒ Bottle Pocket
㉓ Multi Pocket
㉔ Multi Pocket

2. SPECIFICATIONS

2-1. OUTLINE

DIVISION		CONTENTS	
MODEL NAME		FR-631ND	FR-710ND
USABLE CAPACITY (L)	FREEZER	138	156
	REFRIGERATOR	366	398
	TOTAL	504	554
EXTERNAL DIMENSION(mm)	WIDTH	818	818
	DEPTH	752	812
	HEIGHT	1818	1818
REFRIGENT	R12	125	
	R134a	110	
COOLING &CONTROL SYSTEM	COOLING SYSTEM	Fan Cooling System	
	DEFROST SYSTEM	Fin Evaporator Forced	
	DEFORST CONTROL	Automatic Start & Stop	
NET WEIGHT (kg)		85	95

2-2 ELECTRIC PARTS

1) COMPRESSOR

REFRIGERANT	R12								
VOLTAGE (V/HZ)	100 /50,60	110 / 60	115,120/60	127/60	220/50		220 / 60	230 / 50	240 / 50
					SL	KL			
COMP MODEL	X	X	X	X	SL28YE-5	X	PL23YH-4	SL28YE-5	SL28YE-5
PART CODE					3954128A50		3956125G40	3954128A50	3954128A50
STARTING TYPE					RSIR		RSCR	RSIR	RSIR
MAIN COIL A9RESISTANCE									
AUX. COIL RESISTANCE									

REFRIGERANT	R134a								
VOLTAGE (V/HZ)	100 /50,60	110 / 60	115,120/60	127/60	220/50		220 / 60	230 / 50	240 / 50
					PL	KL			
COMP MODEL	X	HBL25YG-3	X	X	HPL26YH-5	X	X	HPL26YH-5	HPL26YH-5
PART CODE3952125R30		3952125R30			3956126S50			3956126S50	3956126S50
STARTING TYPE		CSR			RSCR			RSCR	RSCR
MAIN COIL A9RESISTANCE									
AUX. COIL RESISTANCE									

2) RELAY

REFRIGERANT		R12								
VOLTAGE (V/HZ)		100 /50,60	110 / 60	115,120/60	127/60	220/50		220 / 60	230 / 50	240 / 50
						SL	KL			
ASSY	TYPE NAME	X	X	X	X	276THBYY-52	X	181SHBYY-52	276THBYY-52	276THBYY-52
	PART CODE					3018119350		3018116610	3018119350	3018119350
C-RELAY	RESIS-TANCE									
	PART CODE									
PTC	RESIS-TANCE					S220		S330	S220	S220
	PART CODE									
OVER LOAD	PART CODE					276THB		181SHB	276THB	276THB

REFRIGERANT		R134a								
VOLTAGE (V/HZ)		100 /50,60	110 / 60	115,120/60	127/60	220/50		220 / 60	230 / 50	240 / 50
						PL	KL			
ASSY	TYPE NAME	X	783NHBZZ-52	X	X	197NHBYY-52	X	X	197NHBYY-52	197NHBYY-52
	PART CODE		3018119390			3018119920			3018119920	3018119920
C-RELAY	RESIS-TANCE									
	PART CODE									
PTC	RESIS-TANCE		S220			S330			S330	S330
	PART CODE									
OVER LOAD	PART CODE		783NHB			197NHB			197NHB	197NHB

3) STARTING CAPACITOR

REFRIGERANT	R12								
VOLTAGE (V/HZ)	100 /50,60	110 / 60	115,120/60	127/60	220/50		220 / 60	230 / 50	240 / 50
					SL	KL			
PART CODE									
RATED VOLTAGE									
RATED CAPACITANCE									

REFRIGERANT	R134a								
VOLTAGE (V/HZ)	100 /50,60	110 / 60	115,120/60	127/60	220/50		220 / 60	230 / 50	240 / 50
					PL	KL			
PART CODE		3016400100							
RATED VOLTAGE		200V							
RATED CAPACITANCE		100µF							

4) RUNNING CAPACITOR

REFRIGERANT	R12								
VOLTAGE (V/HZ)	100 /50,60	110 / 60	115,120/60	127/60	220/50		220 / 60	230 / 50	240 / 50
					SL	KL			
PART CODE							400EL15110		
RATED VOLTAGE							350V		
RATED CAPACITANCE							5μF		

REFRIGERANT	R134a								
VOLTAGE (V/HZ)	100 /50,60	110 / 60	115,120/60	127/60	220/50		220 / 60	230 / 50	240 / 50
					PL	KL			
PART CODE		3816800400			3016401900			3016401900	3016401900
RATED VOLTAGE		300V			400V			400V	400V
RATED CAPACITANCE		7μF			4μF			4μF	4μF

5) F-FAN MOTOR

REFRIGERANT	R12, R134a								
VOLTAGE (V/HZ)	100 /50,60	110 / 60	115,120/60	127/60	220/50		220 / 60	230 / 50	240 / 50
					SL	KL			
TYPE NAME	DL-2213DWFA	DL-2213DWFA	DL-2213DWFA	DL-2213DWFA	DL-2213DWFA	DL-2213DWFA	DL-2213DWFA	DL-2213DWFA	DL-2213DWFA
PART CODE	3015905300	3015905300	3015905300	3015905300	3015905300	3015905300	3015905300	3015905300	3015905300
REVOLUTION	2200RPM	2200RPM	2200RPM	2200RPM	2200RPM	2200RPM	2200RPM	2200RPM	2200RPM

6) R-FAN MOTOR

REFRIGERANT	R12, R134a								
VOLTAGE (V/HZ)	100 /50,60	110 / 60	115,120/60	127/60	220/50		220 / 60	230 / 50	240 / 50
					SL	KL			
TYPE NAME	DL-2213DWRA	DL-2213DWRA	DL-2213DWRA	DL-2213DWRA	DL-2213DWRA	DL-2213DWRA	DL-2213DWRA	DL-2213DWRA	DL-2213DWRA
PART CODE	3015906900	3015906900	3015906900	3015906900	3015906900	3015906900	3015906900	3015906900	3015906900
REVOLUTION	2200RPM	2200RPM	2200RPM	2200RPM	2200RPM	2200RPM	2200RPM	2200RPM	2200RPM

7) C- FAN MOTOR

REFRIGERANT	R12, R134a								
VOLTAGE (V/HZ)	100 /50,60	110 / 60	115,120/60	127/60	220/50		220 / 60	230 / 50	240 / 50
					SL	KL			
TYPE NAME		S6111EEC05		S6111NEC04	S6111CEC05		S6111GEC05	S6111CEC05	S6111CEC05
PART CODE		3015909900		3015910100	3015909800		3015910000	3015909800	3015909800
REVOLUTION		2100RPM		2100RPM	2100RPM		2100RPM	2100RPM	2100RPM

8) DEFROST HEATER

REFRIGERANT	R12, R134a								
VOLTAGE (V/HZ)	100 /50,60	110 / 60	115,120/60	127/60	220/50		220 / 60	230 / 50	240 / 50
					SL	KL			
SPEC (W)		180W	180W	180W	180W		180W	180W	180W
PART CODE		3012803210	3012803210	3012803210	3012803200		3012803200	3012803200	3012803200

9) LAMP ASSEMBLY

REFRIGERANT	R12, R134a								
VOLTAGE (V/HZ)	100 /50,60	110 / 60	115,120/60	127/60	220/50		220 / 60	230 / 50	240 / 50
					SL	KL			
SPEC (W)	15W	15W	15W	15W	15W		15W	15W	15W
PART CODE	3013600050	3013600050	3013600050	3013600010	3013600020		3013600020	3013600020	3016800020
COLOR									

10) MAIN PCB ASSEMBLY

REFRIGERANT	R12,R134a								
VOLTAGE (V/HZ)	100 /50,60	110 / 60	115,120/60	127/60	220/50		220 / 60	230 / 50	240 / 50
					SL	KL			
TYPE NAME		Y200	Y200	Y200	Y200	Y200	Y200	Y200	Y200
PART CODE		3014385020	3014385020	3014385020	3014385020		3014385020	3014385020	3014385020

11) DRYER

REFRIGERANT	R12	R134a
SPEC (g)	10g	15g
PART CODE	3016805300	3016805610

12) THERMO FUSE

REFRIGERANT	R12,R134a								
VOLTAGE (V/HZ)	100 /50,60	110 / 60	115,120/60	127/60	220/50		220 / 60	230 / 50	240 / 50
					SL	KL			
OPERATING TEMPERATURE		77°C	77°C	77°C	77°C	77°C	77°C	77°C	77°C
PART CODE		3017200500	3017200500	3017200500	3017200500	3017200500	3017200500	3017200500	3017200500

13) DOOR S/W

REFRIGERANT	R12,R134a								
VOLTAGE (V/HZ)	100 /50,60	110 / 60	115,120/60	127/60	220/50		220 / 60	230 / 50	240 / 50
					SL	KL			
TYPE NAME									
PART CODE		3018100010	3018100010	3018100010	3018100010		3018100010	3018100010	3018100010

14) F-SENSER

REFRIGERANT	R12,R134a								
VOLTAGE (V/HZ)	100 /50,60	110 / 60	115,120/60	127/60	220/50		220 / 60	230 / 50	240 / 50
					SL	KL			
TYPE NAME									
PART CODE		3014801501	3014801501	3014801501	3014801501	3014801501	3014801501	3014801501	3014801501

15) R-SENSER

REFRIGERANT	R12,R134a								
VOLTAGE (V/HZ)	100 /50,60	110 / 60	115,120/60	127/60	220/50		220 / 60	230 / 50	240 / 50
					SL	KL			
TYPE NAME									
PART CODE		3014801601	3014801601	3014801601	3014801601	3014801601	3014801601	3014801601	3014801601

2-3. POWER CORD

NO	SHAPE OF POWER CORD	PART CODE	DESCRIPTION	REMARK
1	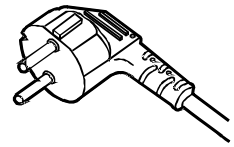	3011315000	CP-2PIN	For european country
2	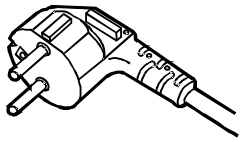	401RA17200	CP-2PIN	For other country
3	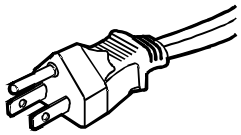	4006D17101	KP-30	For America & El Salvador
4	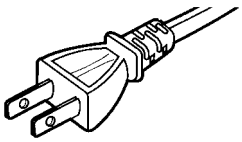	401PD17101	KP-211	For Japan & Taiwan
5	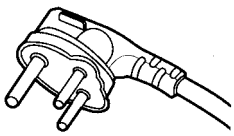	3011300801	BP-3PIN	
6	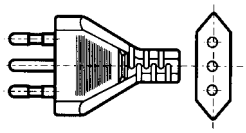	3011303010	# 267	For Chile
7	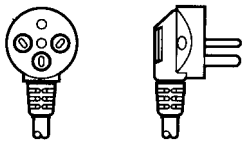	3011315310		For Israel
8	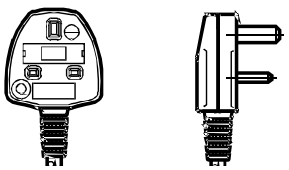	3011303050	BS-1363A	"For U.K, Middle Asia Singapore & Malaysia"
9	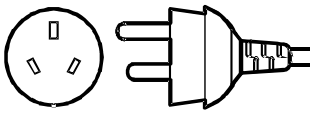	3011301200	KP-551/550	For China & Australia

2-4. DOOR COLOR

1) ASSEMBLY URETHAN FREEZER DOOR

① NON-KEY TYPE

Refrigerant	R12				R134a			
COLORTYP	Embo PCM	High-glossy Laminasheet	Normal PCM	High-glossy Bright PCM	Embo PCM	High-glossy Laminasheet	Normal PCM	High-glossy Bright PCM
PARTCODE	3010024400				3010024410	3010024420		

② KEY TYPE

Refrigerant	R12				R134a			
COLORTYP	Embo PCM	High-glossy Laminasheet	Normal PCM	High-glossy Bright PCM	Embo PCM	High-glossy Laminasheet	Normal PCM	High-glossy Bright PCM
PARTCODE	3010024400				3011124410	3010024420		

2) ASSEMBLY URETHAN REFRIGERATOR DOOR

① NON-KEY TYPE

Refrigerant	R12				R134a			
COLORTYP	Embo PCM	High-glossy Laminasheet	Normal PCM	High-glossy Bright PCM	Embo PCM	High-glossy Laminasheet	Normal PCM	High-glossy Bright PCM
PARTCODE	3010026300				3010026330	3010026340		

② KEY TYPE

Refrigerant	R12				R134a			
COLORTYP	Embo PCM	High-glossy Laminasheet	Normal PCM	High-glossy Bright PCM	Embo PCM	High-glossy Laminasheet	Normal PCM	High-glossy Bright PCM
PARTCODE	3010026320				3010026350			

3. OPERATION AND FUCTIONS

1. Fufrosting Mode

1-1. DISPLAY

<table>
<tr><th>Input</th><th>Control Object</th><th>Contents</th><th>Remark</th></tr>
<tr><td>F-PCB Button
FRZ.SET,
REF.SET,
SLEEP</td><td>CUSTOM LED</td><td>
1. Normal Operation
1) SLEEP Icon(Amber):OFF
2) Initial Temperature Setting:
Freezer/Refrigerator=middle/middle
3) Radar:in rotation
4) EXERGY CONTROL, FRZ/REF:On
5) Else:
<table>
<tr><td>CUSTOM</td><td colspan="3">Normal</td><td>Silent</td><td rowspan="2">Sleep</td></tr>
<tr><td>LED</td><td>Normal</td><td colspan="2">Under Load</td><td>Silent</td></tr>
<tr><td>Freezer Bar</td><td>DIAL</td><td>DIAL</td><td>DIAL</td><td>DIAL</td><td>OFF</td></tr>
<tr><td>Refrigerator Bar</td><td>DIAL</td><td>DIAL</td><td>DIAL</td><td>DIAL</td><td>OFF</td></tr>
<tr><td>Radar</td><td>Rotation</td><td>OFF</td><td>OFF</td><td>OFF</td><td>OFF</td></tr>
<tr><td>EXERGY CONTROL, F/R TEXT</td><td>ON</td><td>ON</td><td>ON</td><td>ON</td><td>OFF</td></tr>
<tr><td>Sleep ICON</td><td>OFF</td><td>OFF</td><td>OFF</td><td>OFF</td><td>ON</td></tr>
<tr><td>Silent ICON</td><td>OFF</td><td>OFF</td><td>ON</td><td>ON</td><td>OFF</td></tr>
<tr><td>SPEED ICON</td><td>OFF</td><td>ON</td><td>ON</td><td>OFF</td><td>OFF</td></tr>
<tr><td>SPEED BAR</td><td>OFF</td><td>ON
(Sequential)</td><td>ON
(Sequential)</td><td>OFF</td><td>OFF</td></tr>
</table>
2. Freezer Button
1) Temperature Control of Freezer Compartment
2) Temperature mode changes as the button is pushed.

(Weak) --> Weak --> Middle --> Strong --> Quick FRZ.

3) When Quick FRZ. Mode is selected, FRZ. LEDs flicker 3 times and only FRZ. LED turns ON.

3. Refrigerator Button
1) Temperature Control of Refrigerator (Fresh Food Compartment)
2) Temperature mode changes as the button is pushed.

(Weak) --> Weak --> Middle --> Strong --> Quick REF.

3) When Quick REF. Mode is selected, REF. LEDs flicker 3 times and only REF. LED turns ON.

4. Sleep Button
1) Sleep Mode starts with push of the button and "SLEEP" icon turns ON, while other LEDs are all OFF.
2) If pushed again, the icon turns OFF and returns to normal mode.
3) Automatic OFF ; This mode lasts maximum 12 hours and then ends of itself.
- Sleep ICON LED : OFF
- The rest LEDs return to normal operation.
</td><td></td></tr>
</table>

1-2. Freezer Temperature Control

Input	Control Object	Contents	Remark
1. Freezer Temperatur e Button 2. F-Sensor	1. COMP 2. F-FAN	1. Temperature mode changes with whenever the FRZ.SET Button is pushed. (Weak) --> Weak --> Middle --> Strong --> Quick FRZ. 2. Comp and F-Fan are controlled by ON / OFF point of each mode. 3. Freezer ON / OFF DIFF : 5 °C (Freezer Middle OFF Point : -19.0°C) 4. Freezer [Strong"Middle"Weak] DIFF : 2 degrees respectively 5. Control Point of Each Mode 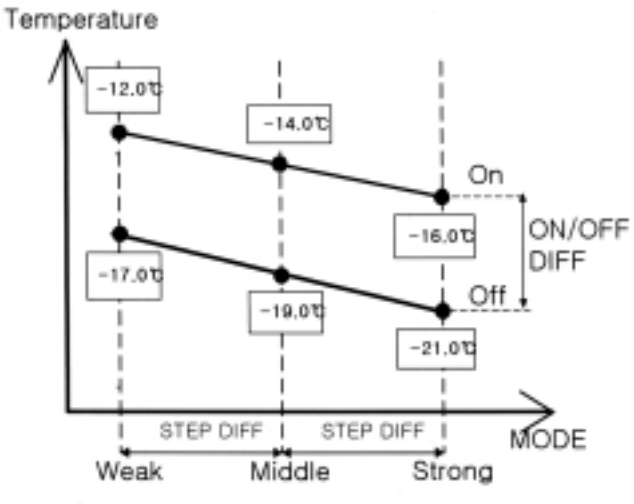 6. Quick Freezing Mode 1) COMP and F-Fan are ON for about 150minutes regardless of F-Sensor. 2) Fan works at 14V for the first 90minutes, 11V for the rest 60minutes. 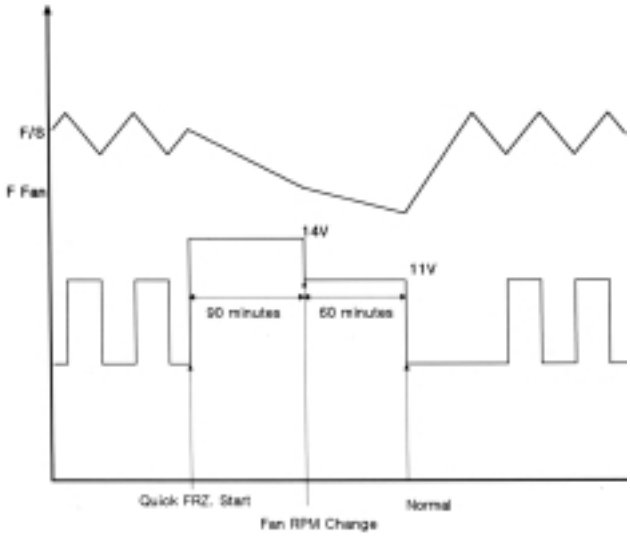 	* ON / OFF Diff : Fixed by MI-COM * STEP Diff ; Fixed by MI-COM * Comp and C-Fan ; co-working

1-3. Refrigerator Temperature Control

Input	Control Object	Contents	Remark
1. Refrigerator Temperatur e Button 2. R-Sensor	1. COMP 2. R-FAN	1. Temperature mode changes with whenever the REF.SET Button is pushed. Weak --> Middle --> Strong --> Quick REF. --> Weak 2. R-Fan is controlled by ON / OFF Point of each mode. 3. Refrigerator ON / OFF DIFF : 0.35 °C (Refrigerator Middle OFF Point : -1.7 °C) 4. Refrigerator [Strong"Middle"Weak] DIFF : 2 degrees respectively 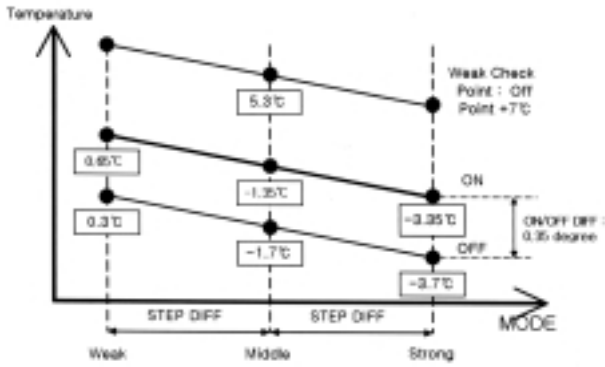 5. Poor(Weak) Refrigeration Prevention 1) When Poor Refrigeration is sensed, COMP turns ON regardless of F-Sensor. 2) When R-Sensor reaches to R-Fan OFF Point, COMP is controlled by F-Sensor, R-Fan turns OFF. 3) Poor Refrigeration sensing point : R-Sensor OFF Point + 7 °C 4) Poor Refrigeration termination point : same as R-Sensor OFF Point 6. Quick Refrigeration lasts for about 40 minutes. ※ Diagram of Quick Refrigeration Start during Weak Operation 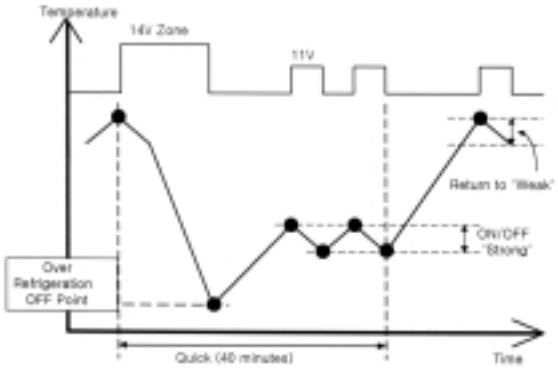 1) R-Fan and COMP are ON until R-Sensor reaches to Over Refrigeration OFF Point (-7°C). 2) After the reach of the point the mode continues to be Strong until the end of Quick Refrigeration. 3) When Quick Refrigeration (40 minutes) ends, it returns to normal operation.	* ON / OFF Diff. : Fixed by MI-COM * STEP Diff. : Fixed by MI-COM

1-4. Sleep Mode

Input	Control Object	Contents	Remark
1. SLEEP Button 2. RT-Sensor	1. COMP 2. R-FAN 3. F-FAN 4. Custom LED	1. The mode starts with push of Sleep Button. 2. Terms to start Sleep Mode ① F-Sensor ≤-13°C ① Reinput within 40 minutes after the termination of Sleep mode ② F-Sensor Error ③ Door Switch Error ⑤ In Defrosting (Heater Defrosting, Pause, Fan Delay) ⑥ If ① through ⑤ are all satisfied, the Sleep mode starts. 3. Control of Electrical Parts 1) MODE 1 - When Sleep mode starts, all the parts (COMP, F-FAN, R-FAN) turn OFF. - Only Sleep ICON turns ON and the other LEDs are OFF. 2) MODE 2 - Fan voltage changes to 8V with Silent operation. - The elses are same as 1). 4. Terms to be Sleep Mode OFF 1) Mode 1 ① F-S ≥ -9°C ② Excess of limit time of 130 minutes ③ F-Sensor Error ④ Repush of Sleep Button during the mode ⑤ Total door open time is over 30 seconds during the Sleep mode. ⑥ If Sleep mode is terminated by ①,②,③, F/R-Fan Delay (5minutes), reinput prevention of Sleep (40minutes) are setup. 2) Mode 2 ① The mode turns OFF 12hours after the start. ② Overload operation and Defrosting during Sleep mode are same as normal mode. 6. When Sleep mode is terminated, all the electrical parts and C-LEDs return to normal state. 7. If Sleep starts during Pre-Cool, it operates again through the rest after the Sleep. 8. If Sleep starts during Quick Freezing or Quick Refrigeration, previous mode operates for the rest of the time after the Sleep mode.	

1-5. Silent Mode

<table>
<tr><th>Input</th><th>Control Object</th><th>Contents</th><th>Remark</th></tr>
<tr>
<td>1. Light
(Optical)
Sensor</td>
<td>1. F-FAN
2. R-FAN
3. C-FAN
4. COMP</td>
<td>1. Fan RPM is reduced by such dark ambient condition as night, so noise from refrigerator is also reduced.

2. Terms to Start
1) When the amount of ambient light is less than the standard for more than 1 minute, the mode starts except for the initial 240minutes operation to prevent cooling speed down.

① Standard to decide "night" is from 1.5 through 7 Lux by the surface of Light Sensor.

<table>
<tr><td>Control Mode</td><td>F FAN</td><td>R FAN</td><td>C FAN</td></tr>
<tr><td>Silent</td><td>8V</td><td>8V</td><td rowspan="2">8V</td></tr>
<tr><td>Under Load</td><td>11V</td><td>11V</td></tr>
</table>
3. How to Control

1) ON / OFF by Freezer & Refrigerator Sensor
- F/R/C-Fans work at 8V.
2) Under Load Mode
- F/R-Fans work at 11V, while C-Fan at 8V.

4. Termination
- When the amount of ambient light is over the standard for more than 1 minute, the mode stops.</td>
<td></td>
</tr>
</table>

1-6. Control of Each Mode

<table>
<tr><th>Input</th><th>Control Object</th><th>Contents</th><th>Remark</th></tr>
<tr>
<td>1. F-Sensor
2. R-Sensor
3. Light Sensor</td>
<td>1. F-FAN, 8 / 11 / 14 V
2. R-FAN, 8 / 11 / 14 V
3. C-FAN, 8 / 11 V</td>
<td>
1. Fan Voltage of Each Mode
<table>
<tr><th colspan="2">Control Mode</th><th>F FAN</th><th>R FAN</th><th>C FAN</th></tr>
<tr><td colspan="2">Normal Control</td><td>11V</td><td>11V</td><td rowspan="2">11V</td></tr>
<tr><td>UnderIn</td><td>Normal</td><td>14V</td><td>14V</td></tr>
<tr><td>LoadIn</td><td>Silent</td><td>11V</td><td>11V</td><td rowspan="2">8V</td></tr>
<tr><td colspan="2">Silent Control</td><td>8V</td><td>8V</td></tr>
</table>
1) Silent Control :
When the Light Sensor decides that it is night, this mode starts.
2) Normal Control : Normal daytime mode
3) Under Load Control :
When the temperature of compartments inside rises up, this mode starts.

2. Terms to Start
1) To recover immediately temperature down of compartments due to frequent door openings and/or heavy load
2) Terms to Start (for both Normal Mode / Silent Mode)
① Over 30 seconds per 1 door opening ; for confrontation of F/R Load
② Over F-Sensor ON Point + 5 degree ; for confrontation of F Load
③ Over R-Sensor ON Point + 5 degree ; for confrontation of R Load

3) Control under Load and Start Avoidance
① Avoiding Load Confrontation Start until the first OFF after initial operation
② Avoiding Load Confrontation Start until Pre-cool, Heater, Pause, F Fan Delay and First Cycle OFF

4) How to control
① When Load Confrontation Mode starts by over 30 seconds of door opening (once) ; F/R-Fan works at 14V.
② When Load Confrontation Mode starts by over F-Sensor ON POINT + 5 degree ; F-Fan works at 14V.
③ When Load Confrontation Mode starts by over R-Sensor ON POINT + 5 degree ; R-Fan works at 14V.
④ C-Fan ; Same as Normal Operation, 10V

5) How to terminate
① 20 minutes after Load Confrontation Mode starts, F/R stop.
② When F-Sensor reaches to OFF Point, F Load Confrontation Mode stops.
</td>
<td></td>
</tr>
</table>

Input	Control Object	Contents	Remark
		3. Time Chart of Control Mode 1) Start & Termination of Load Confrontation Mode (Silent Mode) 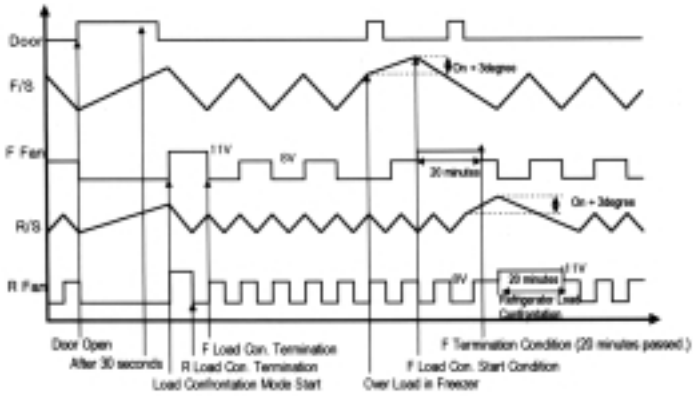 2) Start & Termination of Load Confrontation Mode (Normal Mode) 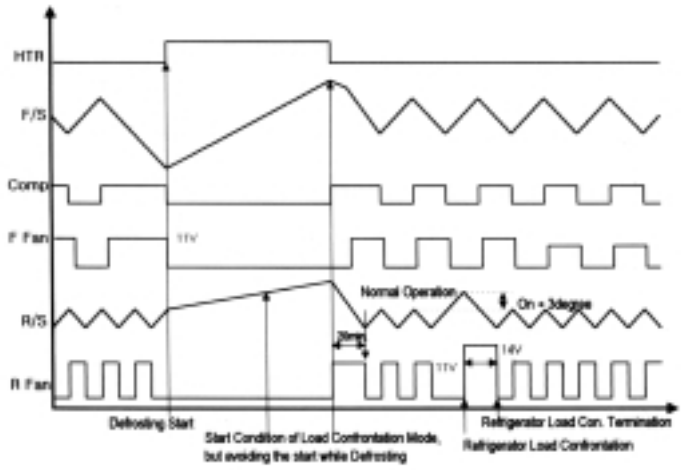 	

Input	Control Object	Contents	Remark

4. Flow Chart of Control of Load Confrontation Mode

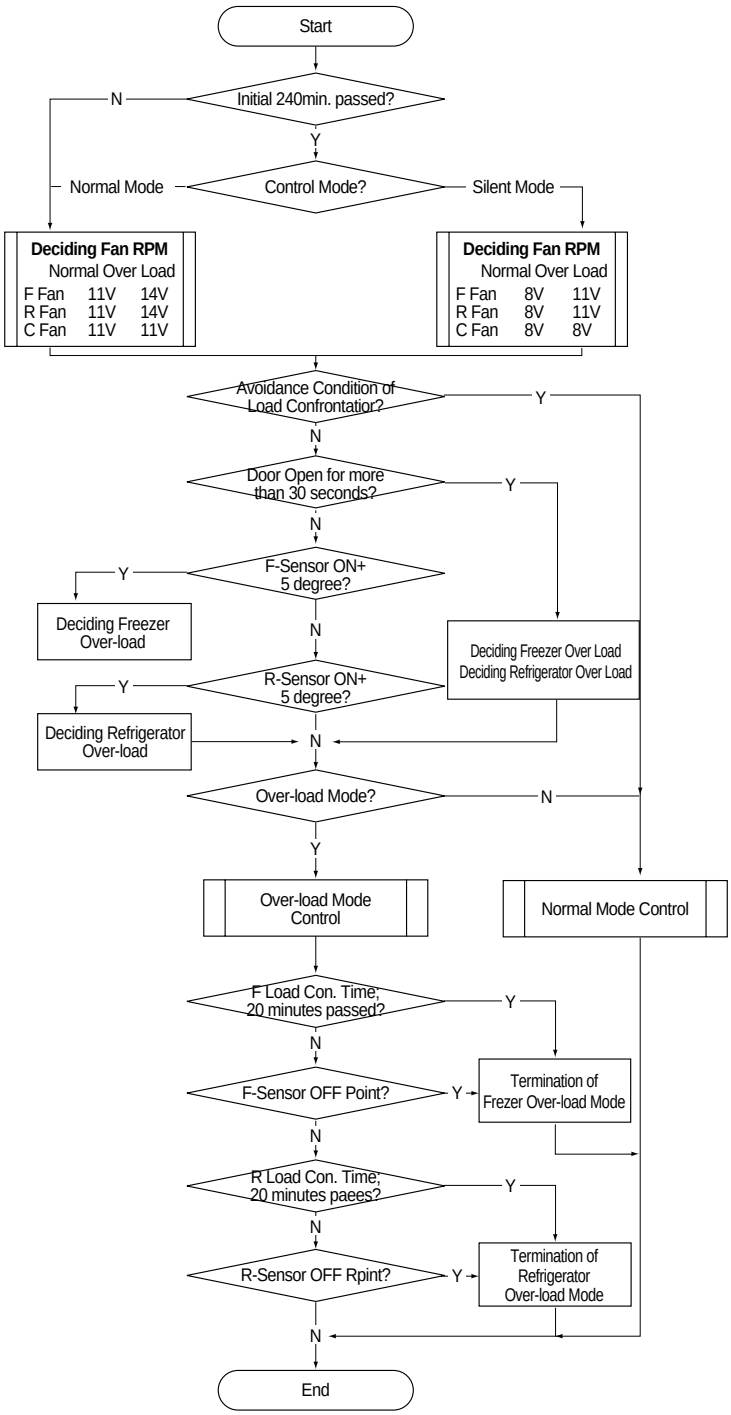

1-7. Defrosting Cycle

Input	Control Object	Contents	Remark
1. Total COMP Work Time 2. COMP Working Rate 3. Total Door Opening Time 4. RT Temperature	1. Defrosting Mode	1. Terms to Start Defrosting Cycle 1) Total COMP Work Time : 6, 8, 10 Hours 2) COMP Working Rate (Every 2 hours of total COMP Working Time) : Over 65% 3) Total Door Opening Time : 10 minutes 4) Total Time (COMP ON Time + COMP OFF Time) : 60 hours 5) Ambient Temperature : Over 30 °C 6) Each Error : R1, F1, D1, F3, RT-Sensor, Door Switch 2. Terms to Start Defrosting Mode 1) When Total COMP Work Time passes 6, 8, 10 hours, Defrosting Mode starts by the following terms. - Each Error happens. - Working Rate of COMP per 2 hours is over 80%. - Total Door Open Time is over 3 minutes. - Ambient temperature is over 30°C. 2) Defrosting starts unconditionally as long as Total COMP Work Time becomes 10 hours, though the terms of 1) are not satisfied. 3) Defrosting starts immediately when Total Time (COMP ON + COMP OFF) is over 60 hours, though the terms of 1) and 2) are not satisfied.	

1-8. Defrosting Mode

<table>
<tr><th>Input</th><th>Control Object</th><th>Contents</th><th>Remark</th></tr>
<tr>
<td>1. Defrosting Cycle</td>
<td>1. COMP
2. F-FAN
3. R-FAN
4. HEATER</td>
<td>
1. Defrosting Mode

PRE-COOL
1) Time = 50minutes
2) COMP & F-FAN : ON
R-fan : Control
Heater : OFF
3) If F-Sensor ≤ - 27°C, PRE-COOL function turns OFF.

Heater Defrosting
1) If D-Sensor ≥10 °C, Heater turns OFF.
2) Limit Time = 80minutes
3) If D-Sensor is in error, Heater turns ON for the Limit Time of 40 minutes.
4) Limit Time
① 30 seconds : Heater is ON continuously right after Defrosting Start regardless of D-Sensor temperature.
② 40 minutes : if D1 Error
③ 80 minutes : if in Normal Control

Pause
1) Time = 4 minutes
2) COMP, F-FAN, R-FAN : OFF

Fan Delay
1) Time = 5 minutes
2) COMP : ON
F/R FAN : OFF

2. Output Control Time & Limit Time of Each Defrosting Mode

<table>
<tr><th></th><th>PRE-COOL</th><th>Heater Defrosting</th><th>Pause</th><th>Fan Delay</th></tr>
<tr><td>COMP</td><td>ON</td><td>OFF</td><td>OFF</td><td>ON</td></tr>
<tr><td>F-FAN</td><td>ON</td><td>OFF</td><td>OFF</td><td>OFF</td></tr>
<tr><td>R-FAN</td><td>Control</td><td>OFF</td><td>OFF</td><td>OFF</td></tr>
<tr><td>HEATER</td><td>OFF</td><td>ON</td><td>OFF</td><td>OFF</td></tr>
<tr><td>Limit Time</td><td>50 min.</td><td>① 80 min.
② 40 min.
(if, D-Sensor Error)</td><td>4 min.</td><td>5 min.</td></tr>
</table>
</td>
<td>C-FAN and COMP are co-working.</td>
</tr>
</table>

1-9. Error Display (C-LED on F-PCB)

<table>
<tr><th>Input</th><th>Control Object</th><th>Contents</th><th>Remark</th></tr>
<tr>
<td>1. Refrigerator Temperatur e Button
2. Refrigerator Door</td>
<td>1. CUSTOM-LED</td>
<td>
1. How to start
1) Open and close refrigerator door 3 times while pushing REF.SET Button.
2) It starts about 3 seconds after 1).
2. How to display
- Control the Bar LED of C-LED related to error as the followings.
- There is 0.1 second beep at 5 seconds' interval.
3. How to terminate
1) Open and close refrigerator door 3 times while pushing REF.SET Button.
2) It stops about 3 seconds after 1)
3) Automatic Termination ; it stops 4 minutes after the start.
4. All the Error Codes are reset when returns to Normal.
5. Error Code
<table>
<tr><th>Error</th><th>Position on</th><th>Contents</th><th>Working Condition</th></tr>
<tr><td>F 1</td><td>[Weak] of Freezer</td><td>F-Sensor Disconnection & Short-circuit</td><td>COMP & F-FAN ;
ON for 40minutes,OFF for 20minutes
(Total Cycle : 60minutes)</td></tr>
<tr><td>r 1</td><td>[Middle] of Freezer</td><td>R-Sensor Disconnection & Short-circuit</td><td>It works at 20 minutes cycle according to RT.</td></tr>
<tr><td>d 1</td><td>[Quick] of Freezer</td><td>D-Sensor Disconnection & Short-circuit</td><td>Heater is ON for 40minutes in defrosting.</td></tr>
<tr><td>r t</td><td>[Strong] of Freezer</td><td>RT-Sensor Disconnection & Short-circuit</td><td>Function deletion by RT-Sensor</td></tr>
<tr><td>d 00r</td><td>[Weak] of Refrigerator</td><td>Defective Door Switch
(if it senses door-open for more than 1hour)</td><td>Function related to Door Switch sensing deleted.</td></tr>
<tr><td>C 1</td><td>[Middle] of Refrigerator</td><td>Abnormal Cycle (COMP works continuously for more than 3 hours when D-Sensor ≥ -5°C)</td><td>Normal Working</td></tr>
<tr><td>F 3</td><td>[Strong] of Refrigerator</td><td>When it returns not to D-Sensor but to Time (80minutes) in Heater Defrosting</td><td>Normal Working
(Pre-cool Mode deletion in Defrosting Mode)</td></tr>
<tr><td>dF1</td><td>ON/OFF of [Quick] of Refrigerator</td><td></td><td>Compulsive Defrosting Mode of "After Service" displayed.</td></tr>
</table>
</td>
<td>* Limit Time : 4 minutes

* Error check without Jig</td>
</tr>
</table>

Input	Control Object	Contents	Remark
		6. How to control in Error 1) F1 ERROR ① Caused by F-Sensor Disconnection & Short ② Control by letting COMP and F-Fan ON for 40 minutes, OFF for 20 minutes. ③ Terminated automatically if F-Sensor is normal. 2) r1 ERROR ① Caused by R-Sensor Disconnection & Short ② Control by ambient temperature	

RT-Sensor	In Error	~13°C	14°C ~ 29°C	29°C ~
Working Rate (ON/OFF)	8 / 12	7 / 13	8 / 12	9 / 11

③ Terminated automatically if R-Sensor is normal
3) rt ERROR
① Caused by RT Sensor Disconnection & Short
② Control : Normal working (Deletion of control condition by RT-Sensor)
③ Terminated automatically if RT Sensor is normal
4) d1 ERROR
① Caused by D Sensor Disconnection & Short
② Control : Limit Time of Defrosting Return 40 minutes
③ Terminated automatically if D Sensor is normal
5) door ERROR
① Caused when door is sensed to be open for more than 1hour
② Control : Deletion of Door Switch Sensing related functions
③ Terminated after display on C-LED
(Error Display Mode starts only when Door Switch is normal.)
6) C1 ERROR
① Caused when COMP works continuously for more than 3 hours under the condition of D-Sensor ≥ -5°C
② Control : Normal Working
③ Terminated when D Sensor ≥ -5°C in COMP OFF
7) F3 ERROR
① Caused when Defrosting returns by Limit Time of 80 minutes
② Control by deleting Pre-Cool in Defrosting Mode
③ Terminated when Defrosting returns by D-Sensor
8) DF1 MODE : A/S Compulsive Defrosting Mode
① Caused when pushing REF.SET Button 5 times while pushing FRZ.SET Button
② Control : A/S Compulsive Defrosting
③ Terminated when D-Sensor is over 10°C

1-10. Compulsive Defrosting

Input	Control Object	Contents	Remark
1. FRZ.SET (Freezer Temperature) Button 2. REF.SET (Refrigerator Temp.) Button	1. Defrosting Mode	※ After Service (Heater) Compulsive Defrosting 1. How to start ; Push REF.SET button 5 times while pushing FRZ.SET button. 2. How to proceed 1) Let Heater ON for 30seconds compulsively. 2) Delete Pre-Cool function of normal defrosting. Heater Defrosting --> Pause --> Fan Delay -->Normal 3. Heater turns OFF if D-Sensor ≥ 10°C, 30 seconds after Heater ON.	

1-11. Time Delay of Electrical Parts

Input	Control Object	Contents	Remark
1. Door Switch 2. COMP ON/OFF	1. F-FAN 2. R-FAN	1. F-Fan is ON/OFF 1 minute after COMP is ON/OFF. 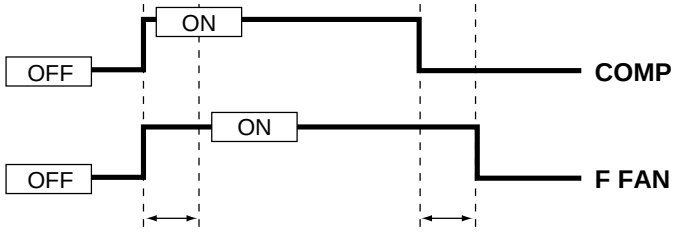 2. Fan Delay and Priority ☞R/F/C-Fan works sequentially at 0.5 second's interval in order to prevent initial over-current to DC Fan. 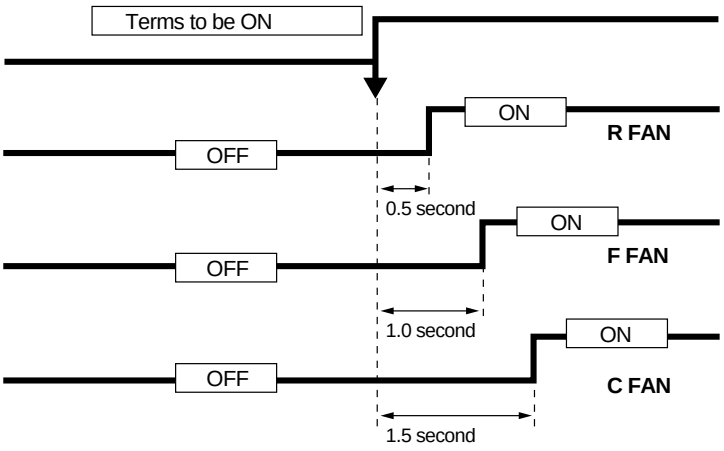 	

1-12. Louver Heater Control

Input	Control Object	Contents	Remark
1. Door Switch 2. COMP	1. Louver Heater	1. It starts when Door is open while COMP is ON. 2. How to control & Termination 1) ON/OFF with co-working of COMP 2) It stops after Louver Heater Control start, 3 times of COMP OFF. 3. Control Example 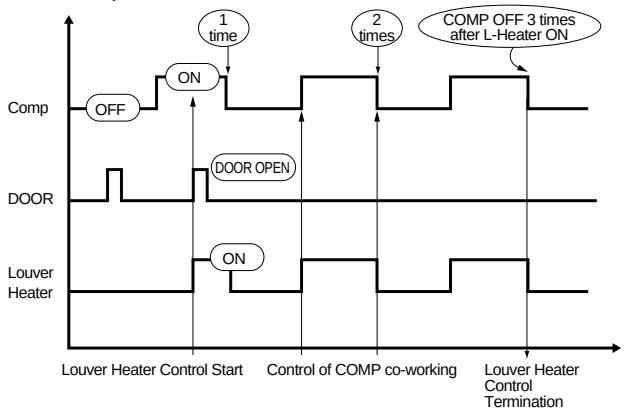 	

1-13. Initial Defrosting

Input	Control Object	Contents	Remark
1. D-Sensor 2. Initial Power Input	1. Defrosting Mode	1. Defrosting starts when D-Sensor ≤ 3.5 °C at initial power input. (It proceeds from PRE-COOL.)	COMP delays for 6 minutes at initial defrosting.

1-14. Explanation after Delivery

Input	Control Object	Contents	Remark
1. FRZ.SET Button 2. REF.SET Button 3. Power Cord	1. Electrical Parts	1. How to start ; Push FRZ.SET Button and REF.SET Button at the same time for 3 seconds within 10 seconds after initial power input. 2. Electrical Parts are OFF for 3 hours. 3. Display works in normal.	

1-15. Prevention of COMP Restart

Input	Control Object	Contents	Remark
1. None	1. COMP	1. COMP does not work until 6 minutes after OFF though F-Sensor is ON.	6minutes Delay

1-16. Beep Sound (Alarm)

Input	Control Object	Contents	Remark
1. Buttons of F-PCB 2. Door Switch	1. Beep	1. Beep sounds whenever F-PCB Button is pushed. 2. 3 seconds after initial power input beep sounds for 1 second. 3. When A/S Compulsive Defrosting or Explanation after Delivery start, beep sounds for 1 second. 4. Beep sounds every 1 minute when dooe is open. (It beeps for 5minutes and sounds longer as time goes.) 5. Beep sounds shortly evety 5 second in Error Display.	

1-17. Demonstration Function

Input	Control Object	Contents	Remark
1. Door Switch 2. REF.SET Button	1. Electrical Parts	1. How to start ; Open and close Refrigerator (Fresh food compartment) door 5 times while pushing REF.SET Button. 2. How to control 1) All the electrical parts except for F-Fan and R-Fan are OFF.	

	Door Open	Door Close
F-FAN	ON	OFF
R-FAN	ON	OFF

2) Fan Control
3) Display
Normal (3.8seconds) °ÊSPEED (3seconds) °ÊSILENT (3seconds) °ÊSLEEP (3seconds)
3. How to terminate
1) Open and close refrigerator door 5 times while pushing REF.SET Button in Demonstration mode.
2) Reinput of power supply

1-18. Control of R-Sensor OFF Point

Input	Control Object	Contents	Remark
1. Slide Switch (SW1) on M-PCB	1. Control Resistance of R Sensor Middle OFF Point	1. When the refrigeration of refrigerator (fresh food compartment) is poor or weak though R-Fan and COMP are working continuously, the following actions are recommended for After Service. 2. Resistance R13 : Control of R-Sensor Middle OFF Point at Normal Operation (31.4 kΩ) 3. Resistance R47 : Let SW1 OFF to reduce basic resistance by 1.5 degree when the poor refrigeration happens. (2.0 kΩ) 4. Resistance R46 : Cut the J1 off to reduce basic resistance by 1.5degree (2.0 kΩ) 5. Resistance and R-Sensor Middle OFF Point	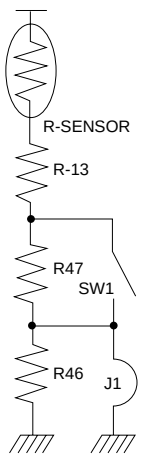

Resistance	R-Sensor Middle OFF Point
R13	Middle OFF Point (-1.7°C)
R13 + R47	Middle OFF Point (-1.7°C) - 1.5 degree
R13 + R47 + R46	Middle OFF Point (-1.7°C) - 3.0 degree

3. CIRCUIT

3-1. POWER

1) Circuit

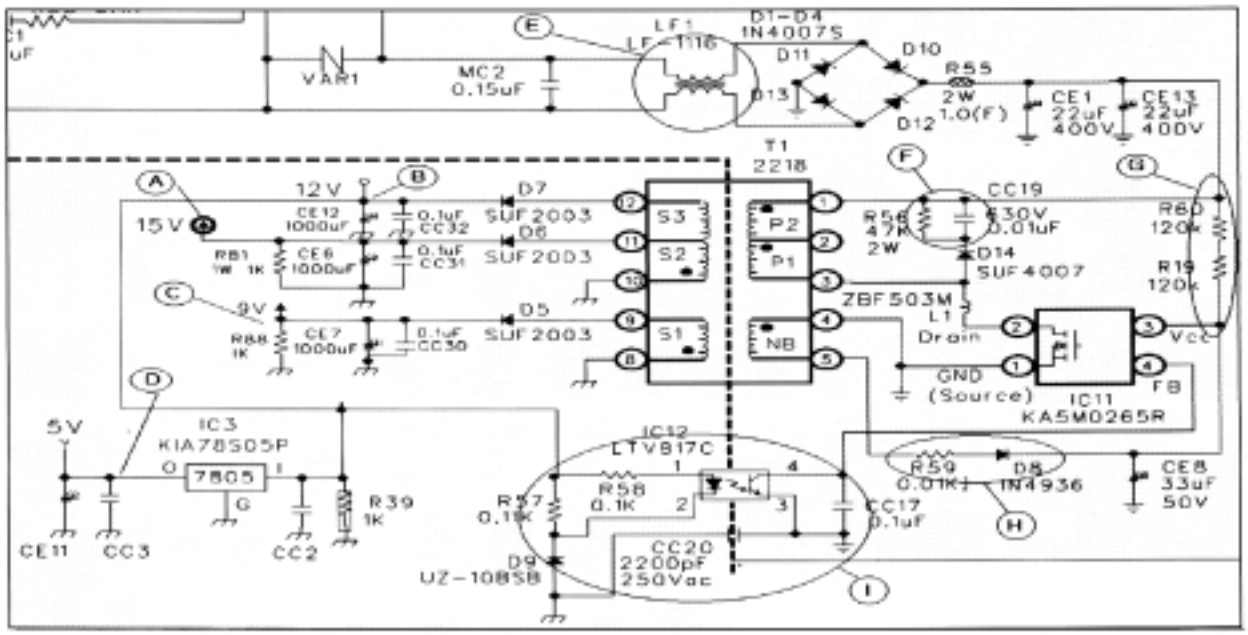

2) Power (Voltage) of DC Output

Point	Oscilloscope Measurement	Remark
Point A,B,C,D	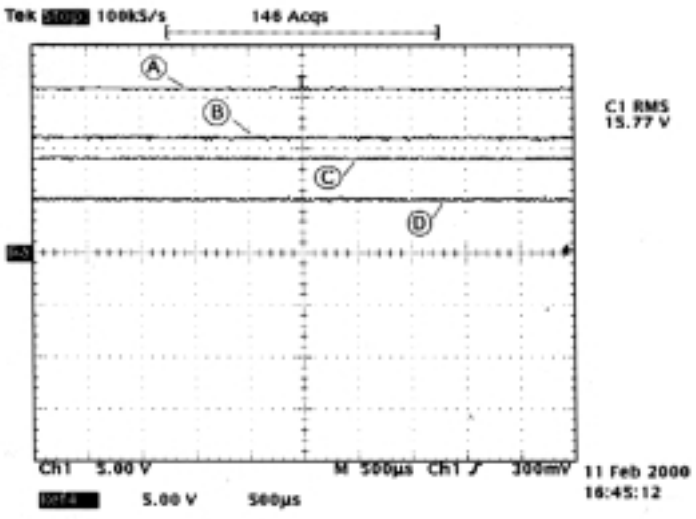	- DC Output A: 15.8V B: 11.1V C: 9.1V D: 5.1V

3) SMPS Wave

a) Noise Protection of Line Power

Point	Oscilloscope Measurement	Remark
E	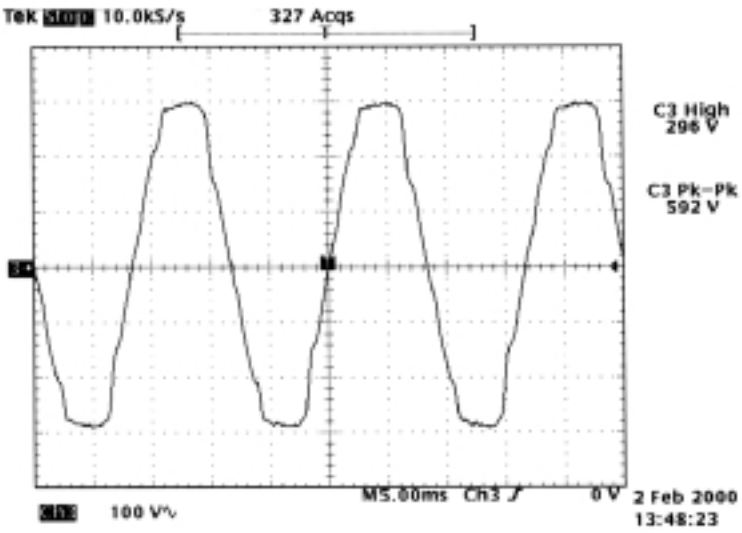	- It works as filter to prevent Line Voltage Noise under 20MHz.

b) Noise Protection when Switching Power IC turns ON

Point	Oscilloscope Measurement	Remark
F	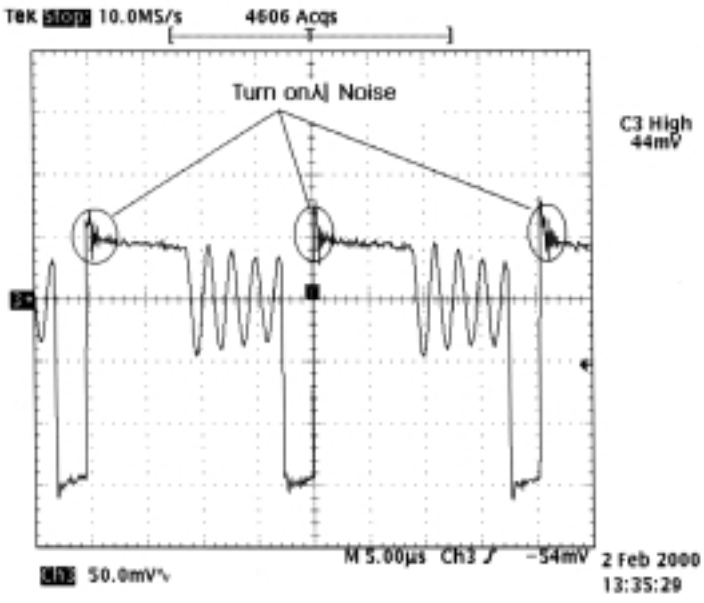	- It prevents the Surging Noise happening when IC1 for Switching Power turns on.

c) Initial Voltage of Switching Power IC

Point	Oscilloscope Measurement	Remark
G	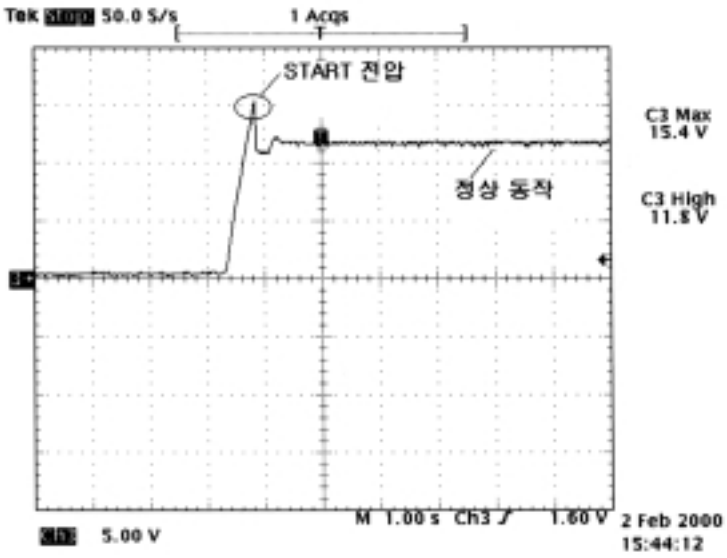	* IC1 initial working circuit * It works at Initial Voltage of 15V, then 12V. * It is reset to initial state under 10V.

d) Power Protection

Point	Oscilloscope Measurement	Remark
H	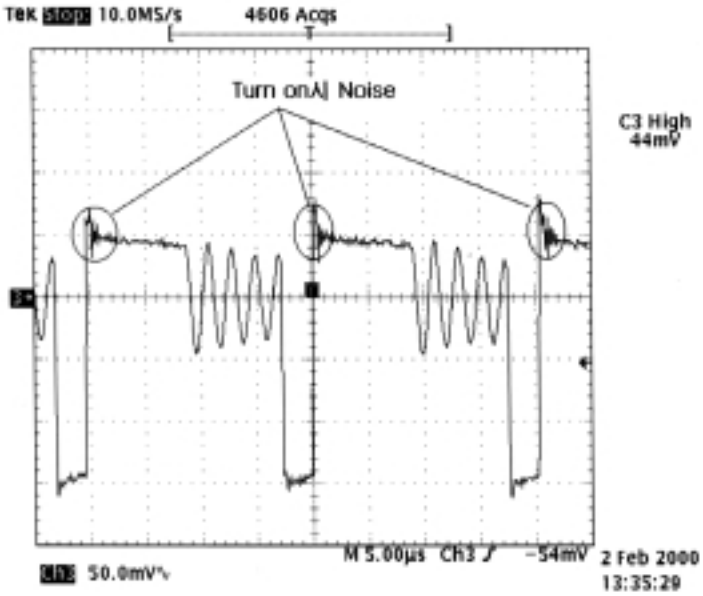	* Protection of power circuit * Second side works abnormally such as short, etc. * It blocks power to protect power circuit when Vcc is sensed under 10V.

e) Control Circuit of Constant Voltage

Point	Oscilloscope Measurement	Remark
I	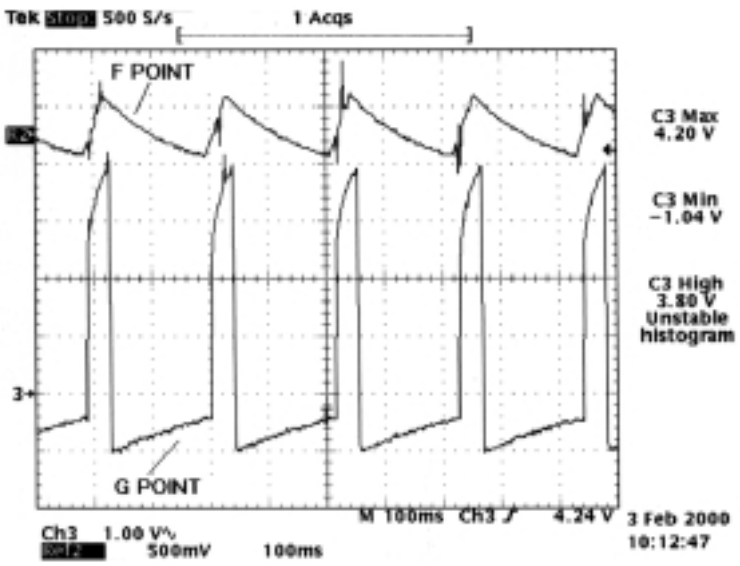	* Control mode of non constant voltage * Point F is wave form under 10V. * It controls constant voltage mode by sensing pulse width according to the amount of voltage.

3-2. Sensors

1) Circuit Diagram

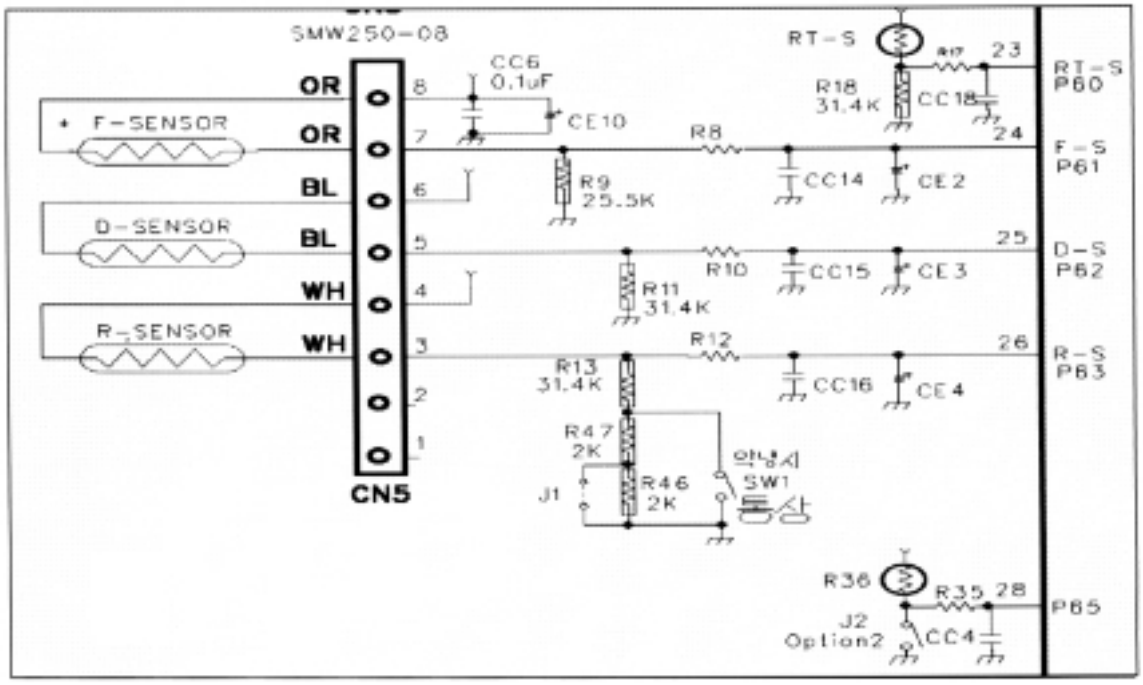

2) Work of Each Sensor

① F-Sensor

- It senses Freezer compartment temperature and controls ON/OFF of COMP, F-Fan.
- How it works ;

Working Point	Weak ON Point	Middle OFF Point	Strong OFF Point
Working Temperature	-12.0°C	-19.0°C	- 21.0°C
Resistance	≒ 14.3 KΩ	≒ 21.1 KΩ	≒ 23.5 KΩ
Sensing Voltage	≒ 3.45 V	≒ 3.0 V	≒ 2.85 V

② D-Sensor

- It senses the return point of defrosting heater.

Work Point	Return Point of Defrosting Heater
Working Temperature	10°C
Resistance	≒ 19.5 KΩ
Sensing Voltage	≒ 3.0 V

③ R-Sensor

- It senses Refrigerator(Fresh Food Compartment) temperature and controls ON/OFF of R-Fan.
- How it works ;

Working Point	Weak ON Point	Middle OFF Point	Strong OFF Point
Working Temperature	0.65 °C	-1.7 °C	- 3.7 °C
Resistance	≒ 28.7 KΩ	≒ 30.2 KΩ	≒ 35.5 KΩ
Sensing Voltage	≒ 2.81 V	≒ 2.64 V	≒ 2.54 V

• When the customers claim that cooling power or refrigeration of Refrigerator(Fresh Food Compartment) is poor though COMP and R-Fan work in normal way ;

1) Move the Slide Switch on M-PCB to "Weak REF" to reduce the Middle OFF Point by -1.5 °C

2) In addition to 1), cut Jumper J1 to reduce Middle OFF Point by -3.0 °C

④ Light Sensor

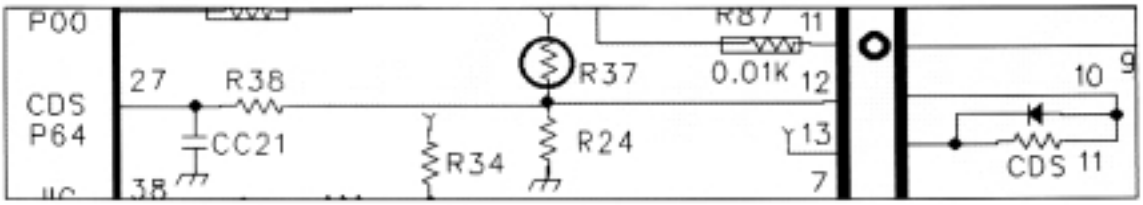

- It senses the amount of ambient light and controls the RPM of F/R/C-Fan.
- How it works ;

Working Point	**In SILENT Mode**	**In Normal Mode**
Sensing voltage	≒ Under 1.0 V	≒ 5.0 V

3-3. Relay

1) Circuit Diagram

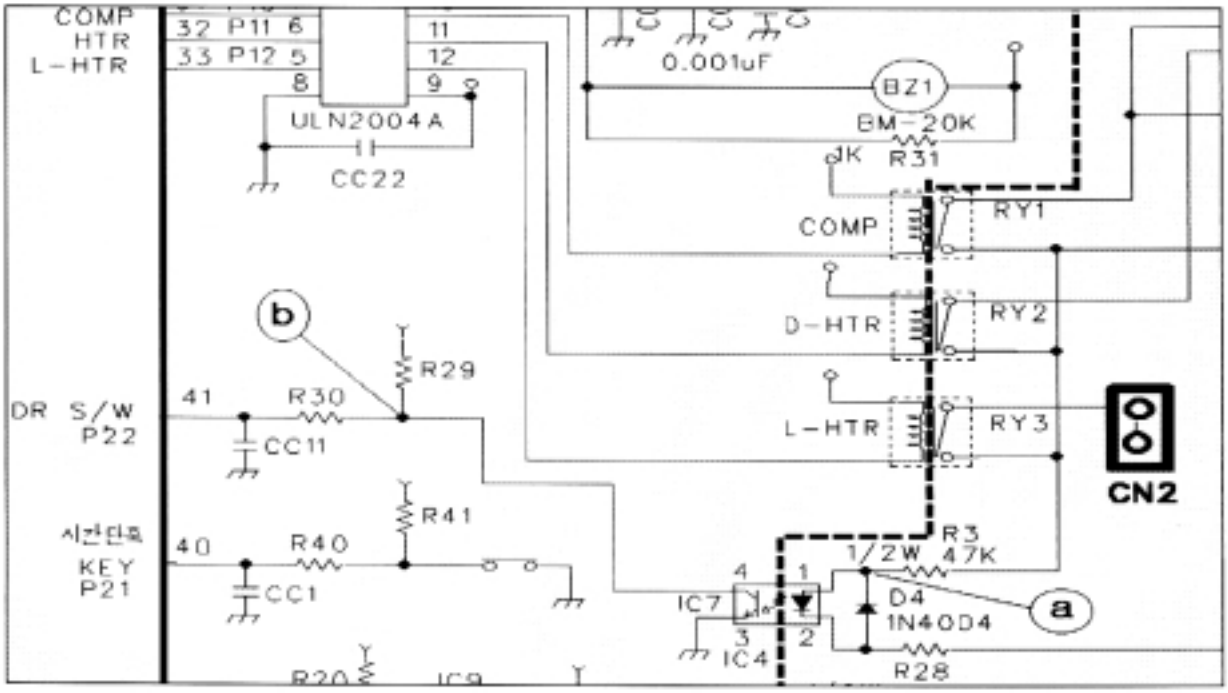

2) How it works ;

Control Object	How to Control	Terms to be ON		Terms to be OFF	
		MICOM PORT	IC2 Output PIN	MICOM PORT	IC02 Output PIN
COMP	RELAY	#31 ≒ 3.7V	#10 ≒ 0.7V	#31 ≒ 0V	#10 ≒ 12V
HTR	RELAY	#32 ≒ 3.7V	#11 ≒ 0.7V	#32 ≒ 0V	#11 ≒ 12V
L-HTR	RELAY	#33 ≒ 3.7V	#12 ≒ 0.7V	#33 ≒ 0V	#12 ≒ 12V

3) Sensing of Door Switch OPEN & CLOSE

	Measuring Point ⓐ	Measuring point ⓑ	Remark
Door OPEN	AC 60 V	2.9 V	Ball-shaped Signal
Door CLOSE	0 V	5.0 V	

3-4. Fan

1) Circuit Diagram

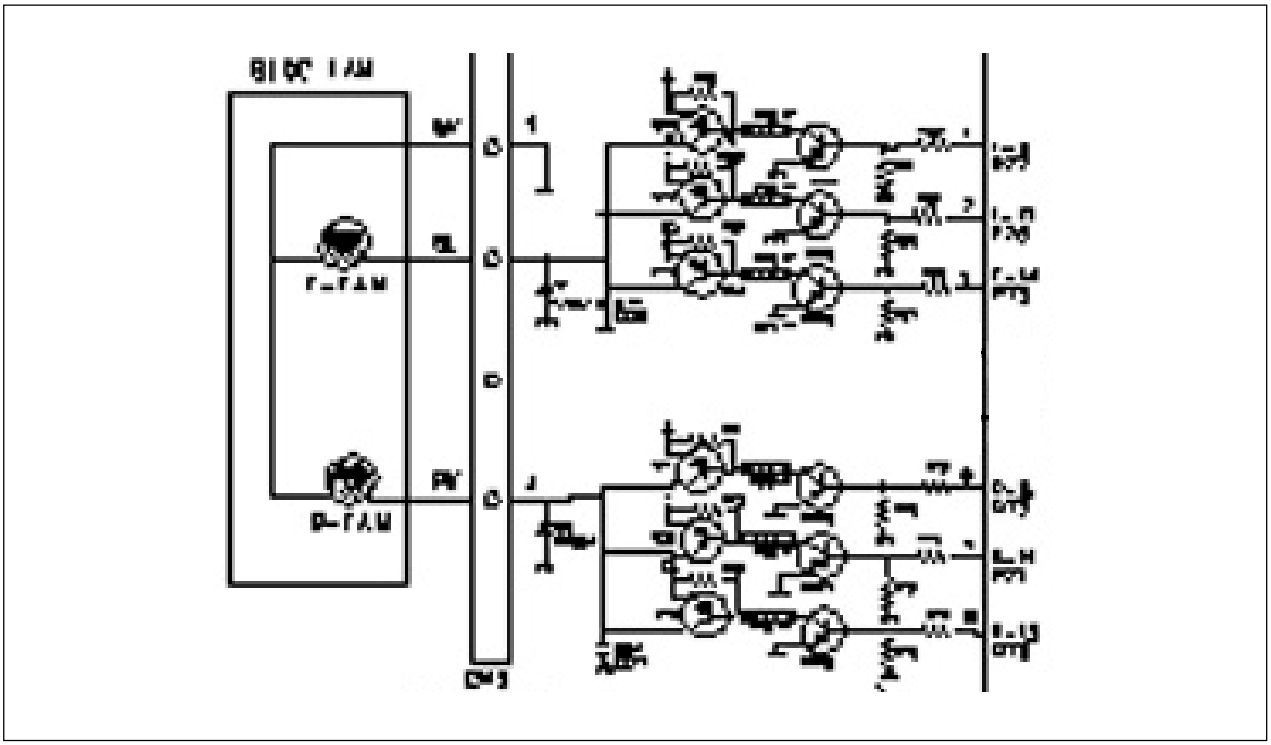

Control Object	How to Control	Terms to be ON		Terms to be OFF	
		MICOM PORT	IC2 Output PIN	MICOM PORT	IC02 Output PIN
F-FAN	SILENT	#1 ≒ 5.0V	IC#15 ≒ 8.6V	#1 ≒ 0V	IC#15 ≒ 0V
	Normal	#2 ≒ 5.0V	IC#14 ≒ 11.1V	#2 ≒ 0V	IC#14 ≒ 0V
	Under Load	#3 ≒ 5.0V	IC#13 ≒ 15.1V	#3 ≒ 0V	IC#13 ≒ 0V
R-FAN	SILENT	#6 ≒ 5.0V	IC#7 ≒ 8.6V	#6 ≒ 0V	IC#7 ≒ 0V
	Normal	#7 ≒ 5.0V	IC#8 ≒ 11.1V	#7 ≒ 0V	IC#8 ≒ 0V
	Under Load	#8 ≒ 5.0V	IC#10 ≒ 15.1V	#8 ≒ 0V	IC#10 ≒ 0V

4. DIAGRAM

4-1. WIRING DIAGRAM

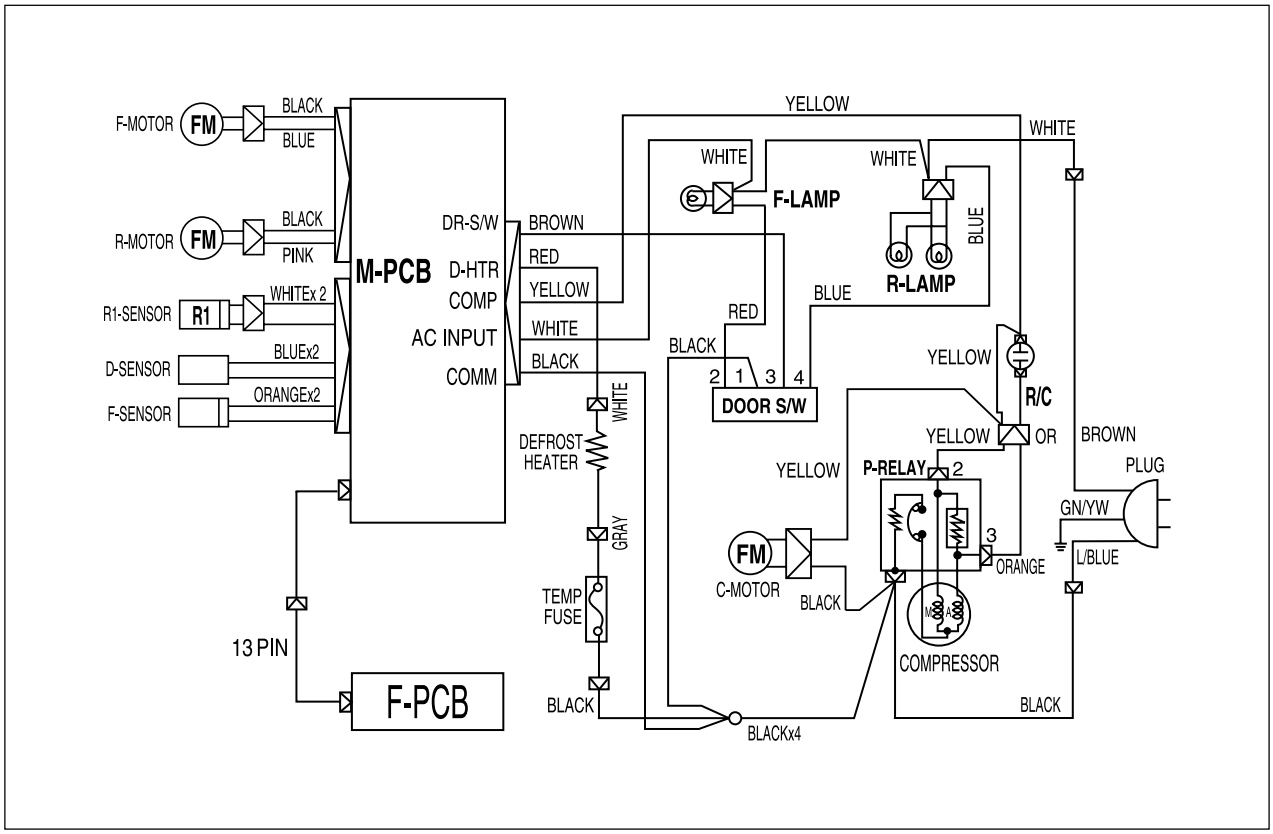

4-2. CIRCUIT DIAGRAM

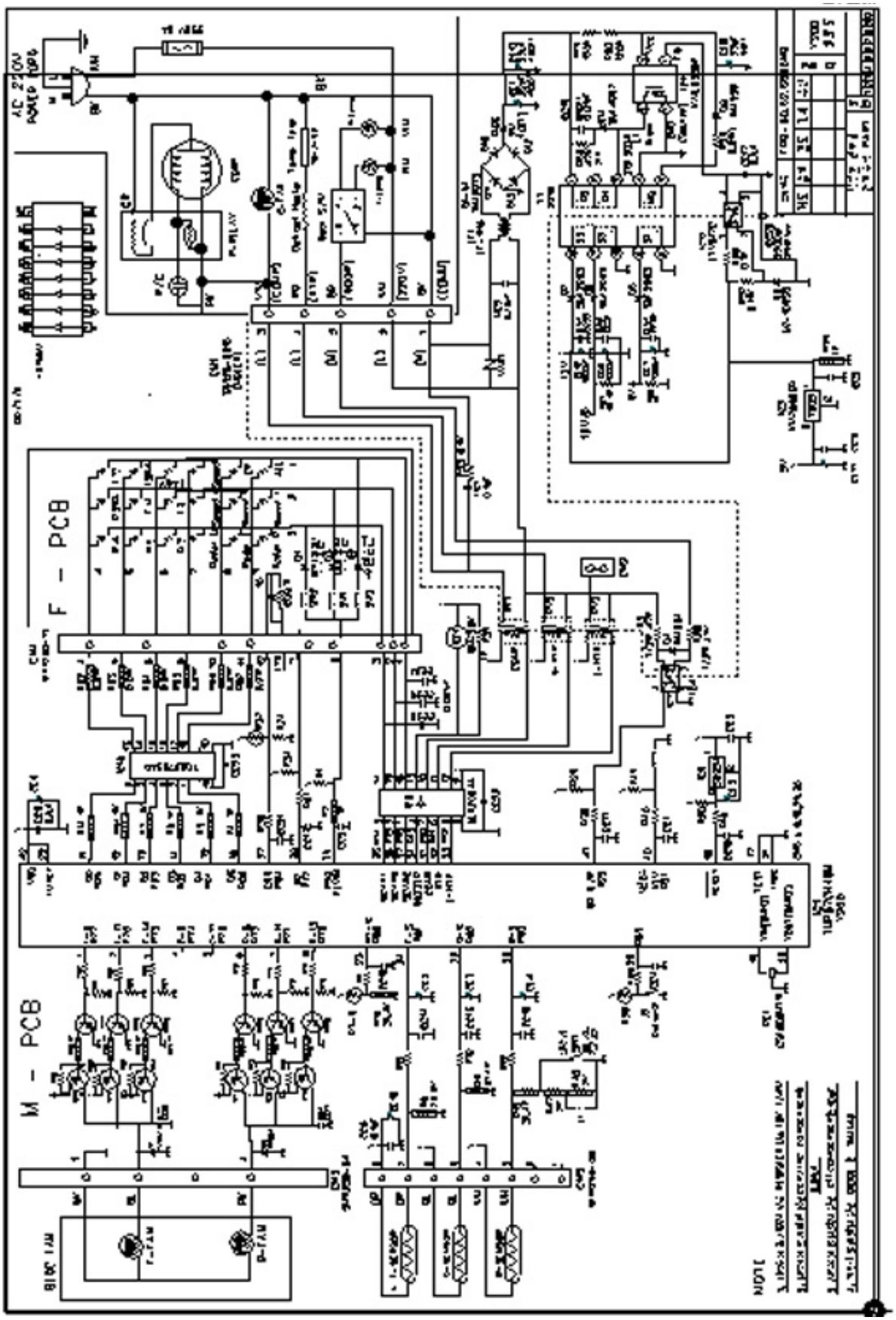

4-3. AIR FLOW DIAGRAM

Freezer
Pleas don't put bottles such as beer, beverage etc.
It might be broken because of freezing

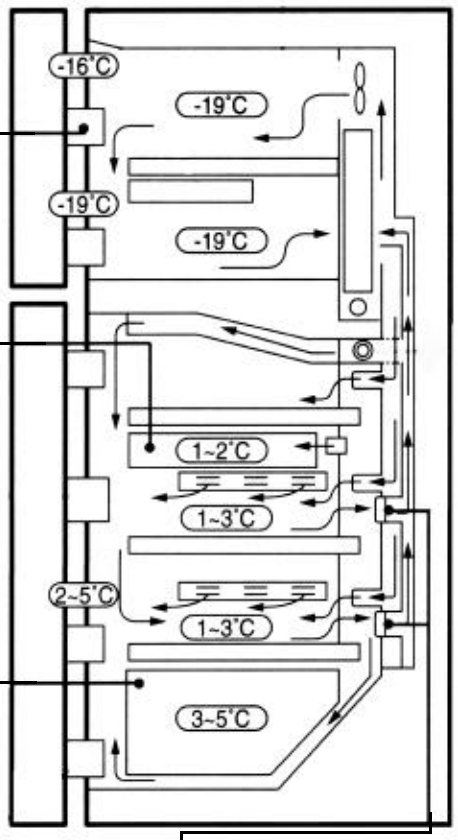

Freezer pocket
Please don't put long term storing items such as ice cream etc.
It might be melted because of opening the door freguently.

Chilled room
It is good for the storage of fishes and meats.

Crisper
It is suitable to store vegetable and fruit.
The moisture panel which is attached to the cover humidity properly.
Vegetable and fruit would be better to

Inlet of cooling air
It should not be blocked with food etc. as it is the inlet where cooling air returns.

Multiple outlet of cooling air.
Please don't put in vegetable etc. which contain moisture. It might be frozen because of low temperature.

4-4. REFRIGRANT CYCLE DIAGRAM

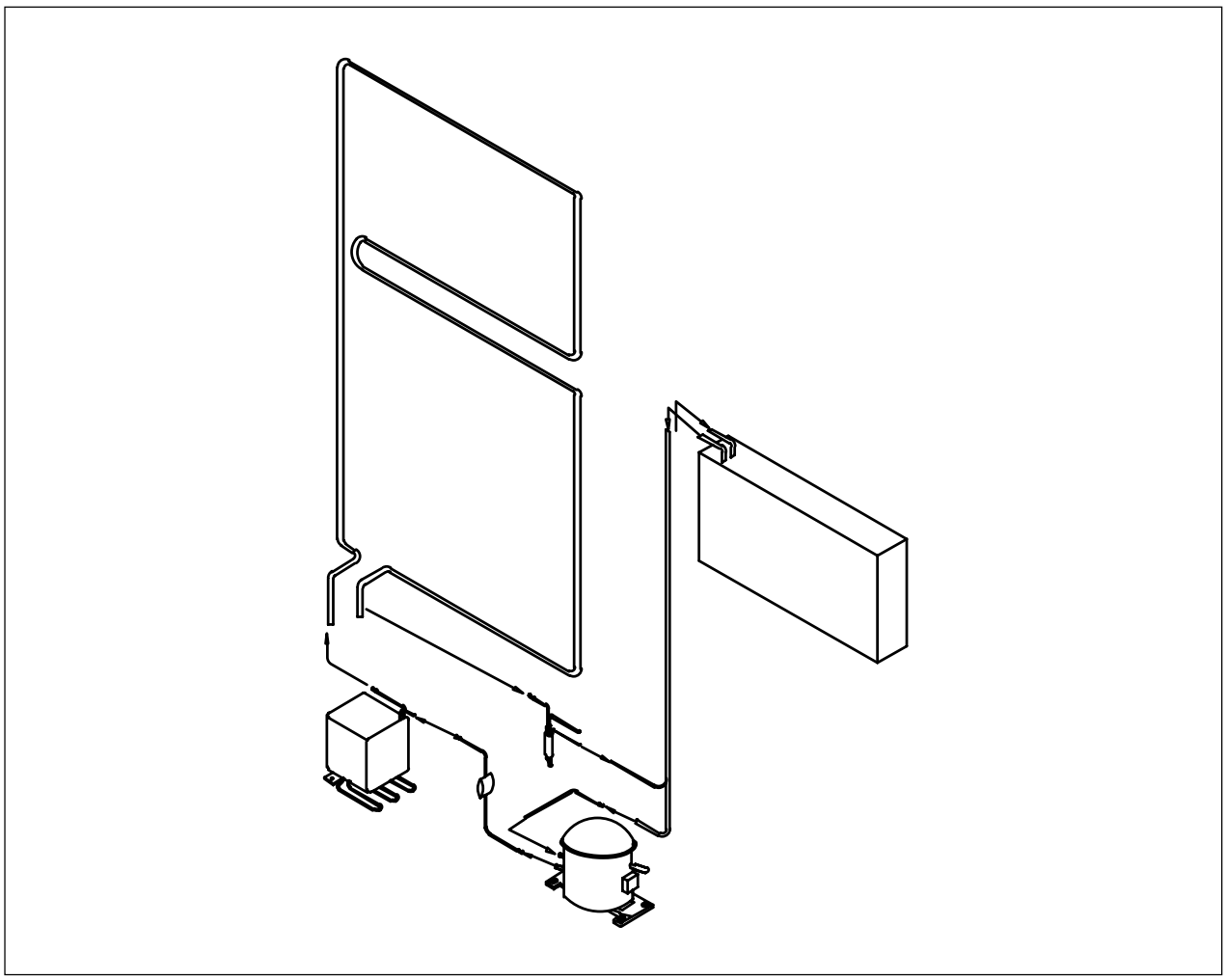

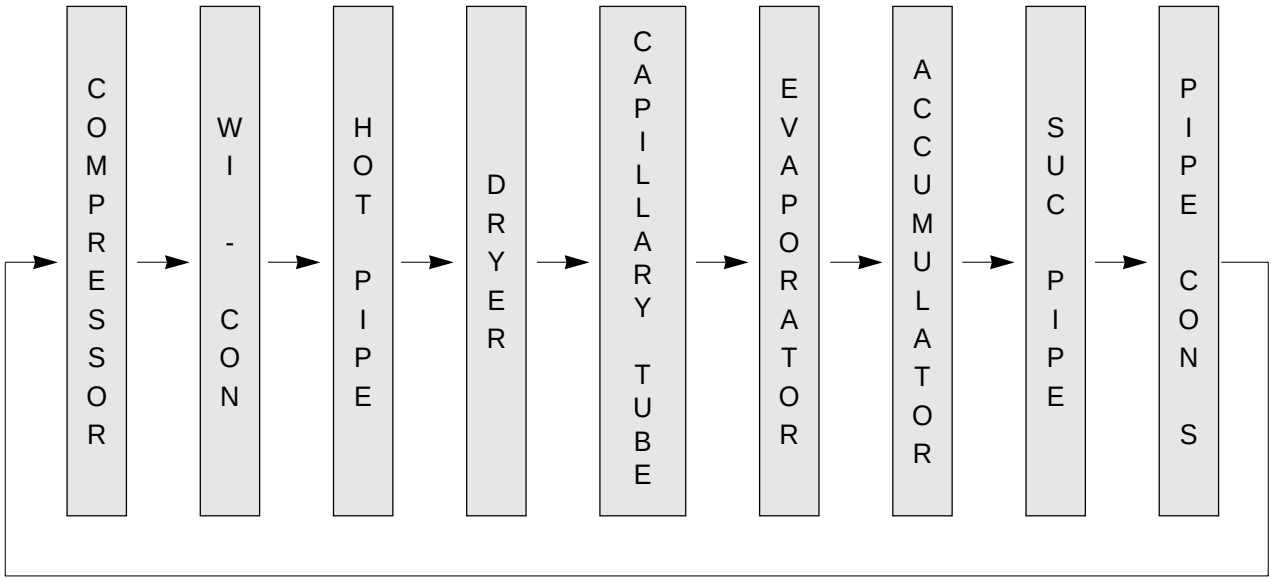

5. EXPLODED VIEW AND PARTS LIST

5-1. TOTAL EXPLODED VIEW

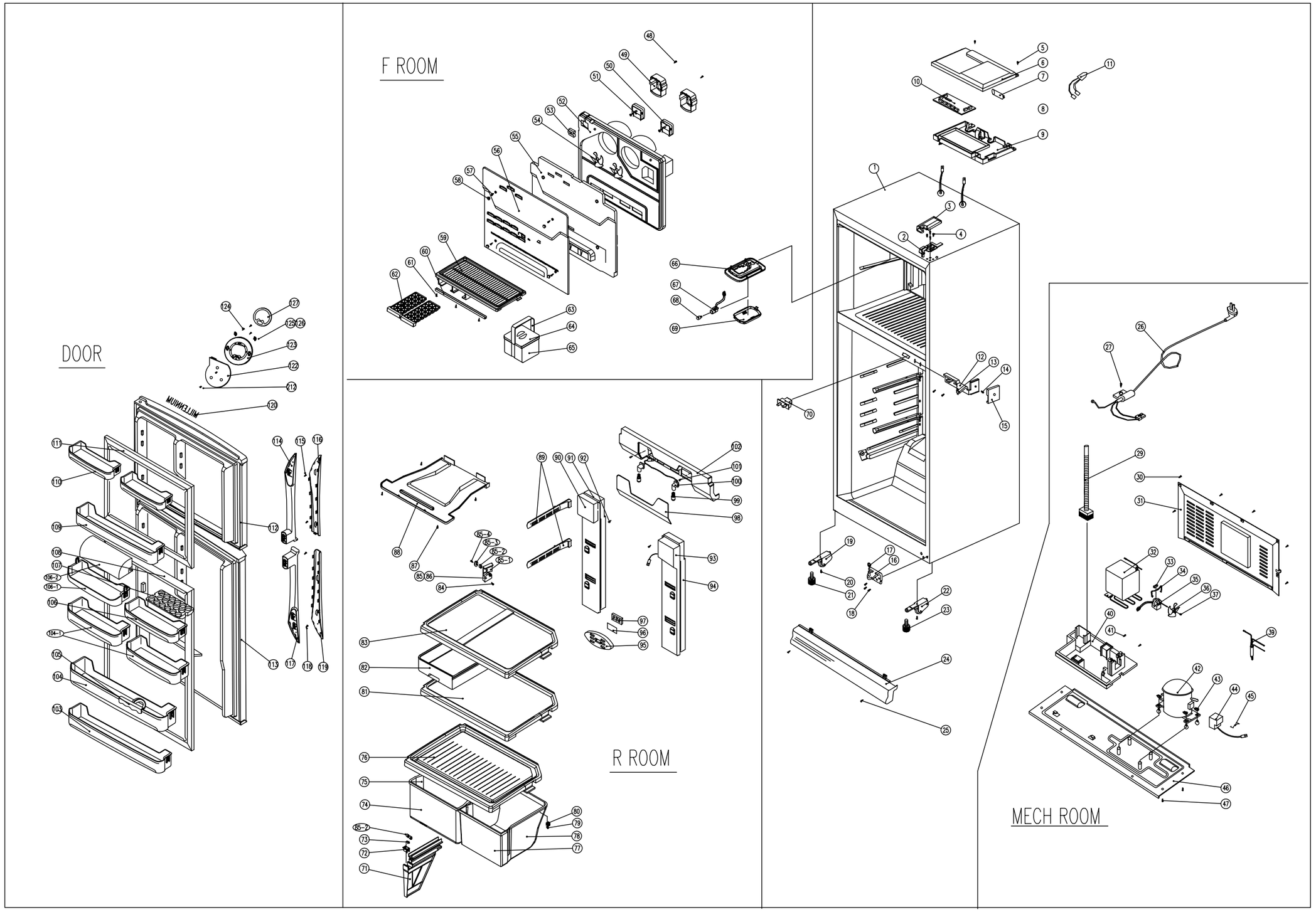

5-2 TOTAL PARTS LIST

✔ **Caution :** In this Service Manual, some parts can be changed for improving, their performance without notice in the parts list. So, if you need the latest parts information, please refer to PPL (Parts Price List) in Service Information Center (http://svc.dwe.co.kr)

NO	PART CODE	PART NAME	PART DESCRIPTION	Q'TY	REMARK
1-1	3010019900	ASSY CAB URT	5080NB	1	5080NB
1-2	3010022800	ASSY CAB URT	5580NB	1	5580NB
2	3012905400	HINGE *T	T2.3 SCP1	1	
3	3011429000	COVER *T HI	PP	1	
4	3016001230	SPECIAL BOLT T/U	M6X22 MFZN	4	
5	7112401211	SCREW TAPPING	T1 TRS 4X12 MFZN	5	
6	3011425300	COVER M-PCB BOX	PP VO	1	
7	400EL15110	CAPACITOR RUN		1	
9	3010511700	BOX M-PCB	PP	1	
10		PCB MAIN AS	Y200	1	
11	3012712501	HARNESS RUN CONN		1	
	3012905801	HINGE *M AS		1	
12	3012905501	HINGE *M	T3.2 PO	1	
13	3014901820	SHAFT *M HI	S20C	1	
14	3016001230	SPECIAL BOLT M	T1 TRS 4X12 MFZN	3	
15	3011424700	COVER *M HI		1	
16	3012905600	HINGE *U		1	
17	3016005300	SPECIAL WASR		1	
18	3016001230	SPECIAL BOLT T/U	T1 TRS 4X22 MFZN	3	
19	3016500720	CASTER F *L AS		1	
20	3016000700	SPECIAL SCREW	M5x15	2	
21	3012102501	FOOT ADJ *L AS		1	
22	3016500820	CASTER F *R AS		1	
23	3012101501	FOOT ADJ AS		1	
24	3011448600	COVER CAB BRKT	PP	1	
25	7112401211	SCREW TAPPING	T1 TRS 4X12 MFZN	2	
26		CORD POWER AS		1	
27	7112401211	SCREW TAPPING	T1 TRS 4X12 MFZN	7	
29	3013202400	HOSE DRN AS	PP	1	
30	7112401211	SCREW TAPPING	T1 TRS 4X12 MFZN	6	
31	3012400901	GRILL		1	
32	3014423320	COIL CON AS		1	
33	3010102100	ABSORBER C MOTR		1	
34	3012004400	FIXTURE C MOTOR		1	
35		MOTOR C	AC 2100RPM	1	
36	3011800400	FAN		1	
37	3011200500	CLAMP FAN		1	
39		DRYER AS		1	
40	3011113610	CASE VAPORI	PP	1	
41	7112401211	SCREW TAPPING	T1 TRS 4X12 MFZN	2	
42		COMPRESSOR		1	

NO	PART CODE	PART NAME	PART DESCRIPTION	Q'TY	REMARK
43	3016002500	SPECIAL WASR	SK-5	1	
44		SWITCH P-RELAY AS		1	
45	3012610000	RELAY BAND	SK-5	1	
46	3010309101	BASE COMP AS		1	
47	3016003300	SPECIAL BOLT	MFZN	4	
48	7112401211	SCREW TAPPING	T1 TRS 4X12 MFZN	2	
	3018908000	LOUVER F B AS		1	
49	3012007800	FIXTURE MOTR A	PP	2	
50	3015906900	MOTOR R	DC MOTOR	1	
51	3015905300	MOTOR F	DC MOTOR	1	
52	3018908000	LOUVER F B	99«¸	1	
53	3014524800	PLATE SENS		1	
54	3011800400	FAN	ABS	2	
54	3018904201	LOUVER F B	PP	1	
	3018909300	LOUVER F A AS		1	
55	3013335100	INSU F LUVR A		1	
56	3018909300	LOUVER F A	HIPS	1	
57	7112401211	SCREW TAPPING	T1 TRS 4X12 MFZN	4	
58	3010924600	CAP F LUVR		1	
59	3017820900	SHELF F AS	HIPS(FR-631ND)	1	
59-1	3017820920	SHELF F AS	HIPS(FR-710ND)	1	
60	3010621500	BRACKET F SHELF		1	
61	7112401211	SCREW TAPPING	T1 TRS 4X12 MFZN	3	
62	3011110200	CASE ICING	PP	2	
	3010519500	BOX ICE AS		1	
63	3012603400	HANDLE ICE BOX	ABS	1	
64	3011415500	COVER ICE BOX	GPPS	1	
65	3010519600	BOX ICE	HIPS	1	
66	3012003800	FIXTURE F LAMP		1	
67	3017900840	SOCKET F LAMP AS		1	
68		LAMP AS		1	
69	3015502600	WINDOW F	PP	1	
70	3018100040	SWITCH DR		1	
	3012508700	GUIDE V/CASE *M AS		1	
71	3012505600	GUIDE V/CASE *M		1	
72	3015304100	SUPPORTER ROLL B		1	
73	3014904300	SHAFT ROLLER			
74	3011110400	CASE VEGETB *L A		1	
75-1	3011110700	CASE VEGETB *L B	HIPS(FR-631ND)	1	
75-2	3011110800	CASE VEGETB *L B	HIPS(FR-710ND)	1	
76-1	3011428701	COVER V/CASE	SAN(FR-631ND)	1	

NO	PART CODE	PART NAME	PART DESCRIPTION	Q'TY	REMARK
76-2	3011428601	COVER V/CASE	SAN(FR-710ND)	1	
77	3011110500	CASE VEGETB *R A		1	
78-1	3011111000	CASE VEGETB *R B	HIPS(FR-631ND)	1	
78-2	3011113400	CASE VEGETB *R B	HIPS(FR-710ND)	1	
79	3014700200	ROLLER V/CASE	*R / *L = 2 / 2	4	
80	3015303300	SUPPORTER ROLL	*R / *L = 2 / 2	4	
81-1	3017815010	SHELF R *U AS	GLASS(FR-631ND)	1	
81-2	3017813110	SHELF R *U AS	GLASS(FR-710ND)	1	
82-1	3011111310	CASE CHILD	SAN(FR-631ND)	1	
82-2	3011111510	CASE CHILD	SAN(FR-710ND)	1	
83-1	3017814910	SHELF R *T AS	GLASS(FR-631ND)	1	
83-2	3017812610	SHELF R *T AS	GLASS(FR-710ND)	1	
84	7112401211	SCREW TAPPING	T1 TRS 4X12 MFZN	2	
85	3012507020	GUIDE *L AS		1	
85-1	3012505000	GUIDE V/CASE *L		1	
85-2	3014700300	ROLLER A		4	
85-3	3016003700	SPECIAL WASR		1	
85-4	7112401211	SCREW TAPPING	T1 TRS 4X12 MFZN	1	
86	3012507100	GUIDE *R AS	PA-6	1	
87	7112401611	SCREW TAPPING	TRS 4X16 MFZN	4	
88	3014228300	PANEL R *T	FR-710ND	1	
89	3011428900	COVER CUBIC DUCT	ABS	4	
	3018904500	LOUVER R *S *L AS			
90	3018904300	LOUVER R *S *L	PP	1	
91	3013324301	INSULATOR R *S *L	F-PS	1	
92	7112401611	SCREW TAPPING	TRS 4X16 MFZN	2	
	3018908410	LOUVER R *S *R AS		1	
93	3018904400	LOUVER R *S *R	PP	1	
94	3013324401	INSULATOR R *S *R	F-PS	1	
95	3010916800	CAP RETUN DUCT	ABS	2	
96	3011900600	FILTER DEO CUBIC		6	
97	3018701400	DEODRANT ANTI CUBIC		6	
98	3015502800	WINDOW R	GPPS	1	
99		LAMP AS		2	
100	3017901010	SOCKET R LAMP AS	250 [V] / 1 [A]	1	
101	7112401611	SCREW TAPPING	TRS 4X16 MFZN	2	
102	3011416800	COVER RETUN DUCT	PP	1	
103	3019012600	POCKET SM	HIPS	1	
104	3019012700	POCKET JUMBO	HIPS	1	
104-1	3019012800	POCKET MULTI	HIPS	2	
105	3012509000	GUIDE JUMBO POCKET AS	ABS	1	

NO	PART CODE	PART NAME	PART DESCRIPTION	Q'TY	REMARK
106	3019012500	POCKET EGG	HIPS	1	
106-1	3019012400	POCKET FRESH	HIPS	1	
106-2	3011448400	COVER FRESH POCKET	GPPS	1	
107	3011161500	CASE EGG	GPPS	1	
108	3012307620	GASKET R DR AS	PVC-S	1	
109	3019012300	POCKET F *U	HIPS	1	
110	3019012200	POCKET F *T	HIPS	2	
111	3012307520	GASKET F DR AS	PVC-S	1	
112		ASSY F DR		1	
113		ASSY R DR		1	
114	3012610900	HANDLE F	ABS	1	
115	7002501611	SCREW MACHINE	TRS 5X16 MFZN	2	
116	3011609100	DECO F DR HNDL	ABS	1	
117	3012611000	HANDLE R	ABS	1	
118	7002501611	SCREW MATCHING	TRS 5X16 MFZN	2	
119	3011609200	DECO R DR HNDL	ABS	1	
120		EMBLEM		1	
121	7173301011	SCREW TAPPING	TT2 BIN 3X12MFZN	2	
122	3014395120	PCB *F AS	Y200	1	
123	3014228510	PANEL *F CONTL	ABS	1	
124	7125301211	SCREW TAPPING	T2S FLT 3X10 MFZN	3	
125	3016301100	BUTTON FCP *L		1	
126	3016301200	BUTTON FCP *R		1	
127	3015505110	WINDOW FCP AS		1	

5-3. MACHINE ROOM EXPLODED VIEW AND PARTS LIST

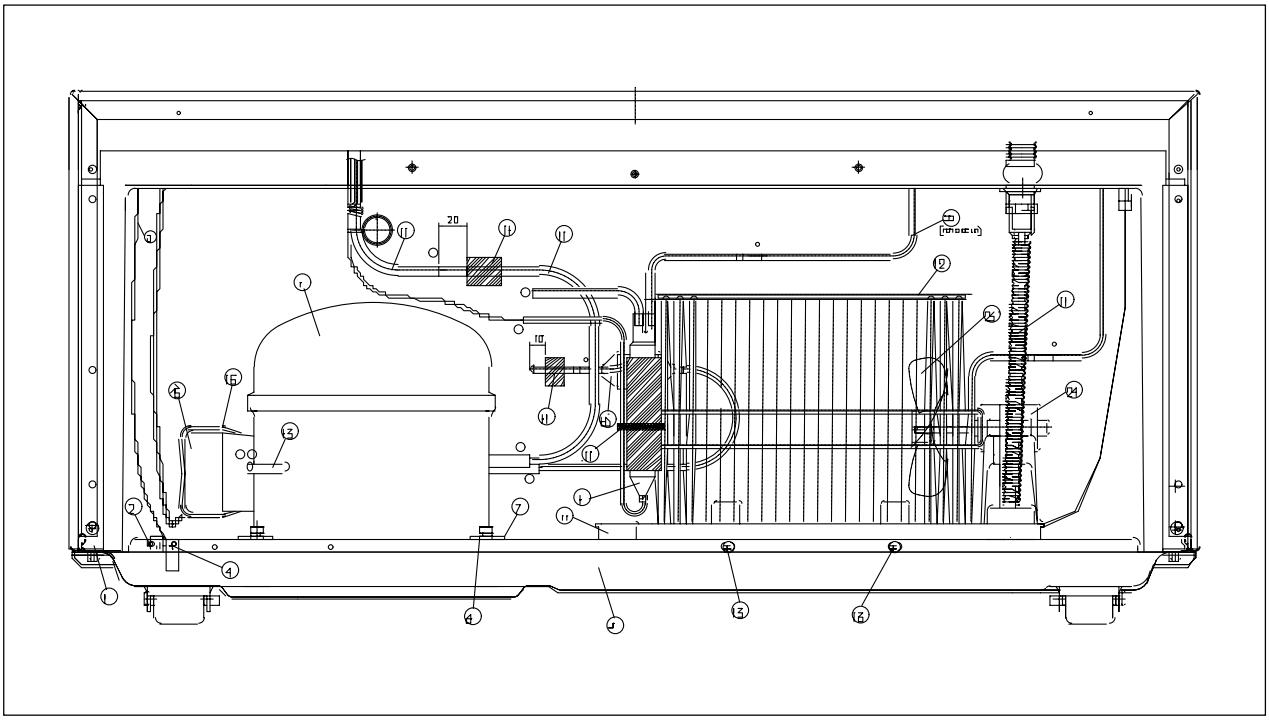

NO	PART NAME	NO	PART NAME	NO	PART NAME
1	BASE CAB *B	10	CABLE TIE	18	PIPE SUC CONN
2	SCREW MACHINE	11	CASE VAPORI AS	19	ABSORBER PIPE
3	CORD POWER AS	12	PIPE WI-CON AS	20	PIPE MUFFLER AS
4	SCREW TAPPING	13	SCREW TAPPING	21	ABSORBER PIPE A
5	COMPRESSOR	14	DRAIN HOSE B AS	22	PIPE HOT
6	ABSORBER COMP AS	15	SWITCH P-RELAY AS	23	PIPE SERVICE
7	WASHER SPECIAL	16	BAND RELAY	24	MOTOR C
8	BASE COMP AS	17	PIPE SUC AS	25	FAN C AS
9	DRYER AS				

DAEWOO

DAEWOO ELECTRONICS CO., LTD.
686, AHYEON-DONG MAPO-GU SEOUL, KOREA
C.P.O. BOX 8003 SEOUL, KOREA
TELEX: DWELEC K28177-8
CABLE: “DAEWOOELEC”
FAX: 02) 360-8184
TEL: 02) 360-8183
E-mail : G7F00E@web.dwe.co.kr

S/M NO. : FR631ND010

PRINTED DATE: Feb. 2001