HCD700R/N, HMD700R/N
Ice Machines

Order parts online
www.follettice.com

Operation and Service Manual
Serial Numbers After H58642

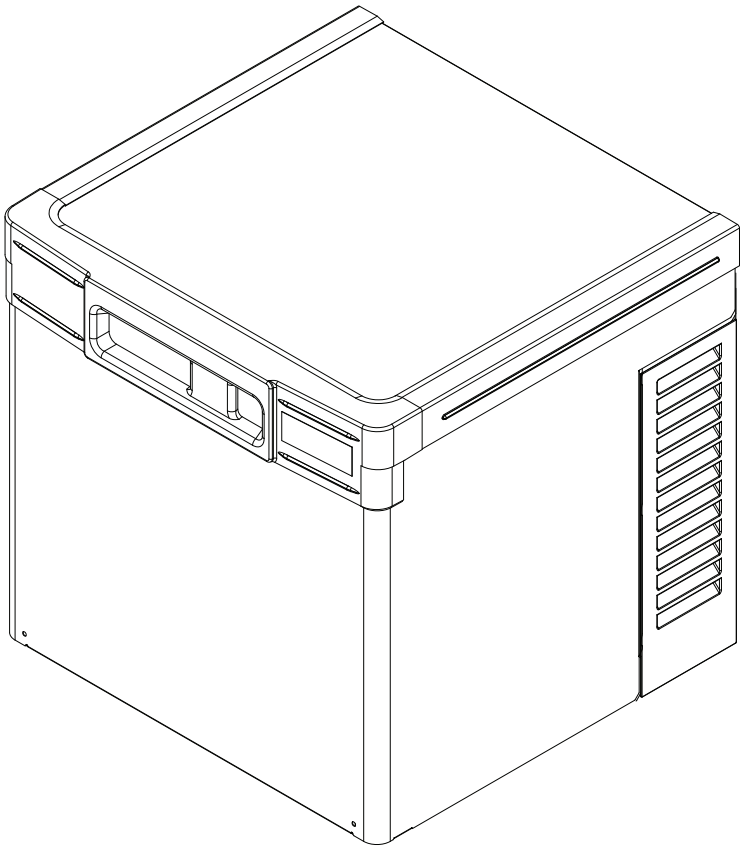

Following installation, please forward this manual to the appropriate operations person.

FOLLETT®
Innovative solutions, inspired by ice

801 Church Lane • Easton, PA 18040, USA
Toll free (877) 612-50861 • +1 (610) 252-7301
www.follettice.com

01012715R07

Table of contents

Welcome to Follett Corporation **4**
Specifications 5
Operation **7**
Cleaning, weekly exterior care 7
Cleaning, semi-annual evaporator cleaning 7
Service **12**
Ice machine operation 12
Water system 13
Electrical system 14
Normal control board operation 14
Test points 15
Error faults 15
Hard errors 15
Soft errors 15
Relay output indication 15
Compressor/refrigerant solenoid output 15
Wiring diagram, evaporator unit 16
Wiring diagram, condenser unit 17
Gearmotor data 17
Mechanical system 18
Evaporator disassembly 18
Evaporator reassembly 20
Refrigeration system 23
Condenser unit operation 23
Refrigerant pressure data 23
Refrigerant charges 23
Refrigeration system diagram 24
Refrigerant replacement requirements 25
Evacuation 25
Ambients (evaporator unit) 25
Ice capacity test 25
Bin full detection system 26
Troubleshooting 27
Replacement parts 30

Welcome to Follett

Follett equipment enjoys a well-deserved reputation for excellent performance, long-term reliability and outstanding after-the-sale support. To ensure that this equipment delivers the same degree of service, we ask that you review the installation manual (provided as a separate document) before beginning to install the unit. Our instructions are designed to help you achieve a trouble-free installation. Should you have any questions or require technical help at any time, please call our technical service group at (877) 612-5086 or +1 (610) 252-7301.

Before you begin

After uncrating and removing all packing material, inspect the equipment for concealed shipping damage. If damage is found, notify the shipper immediately and contact Follett Corporation so that we can help in the filing of a claim, if necessary.

Check your paperwork to determine which model you have. Follett model numbers are designed to provide information about the type and capacity of Follett equipment. Following is an explanation of the different model numbers in the 700 series.

Chewblet® Ice Machine Model Number Configurations

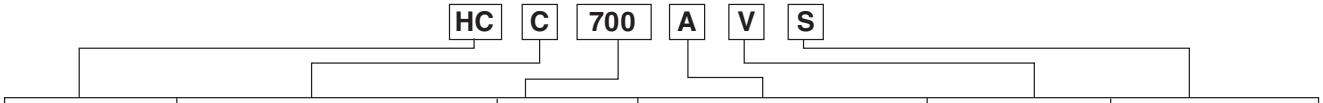

Machine	Voltage	Series	Condenser	Application	Configuration
MC Maestro™ Chewblet (400 Series) HC Horizon Chewblet (1000, 1400, 1650 Series) HM Horizon Micro Chewblet	C 208-230/60/1 (icemaking head) *Self-contained only.* D 115/60/1 (icemaking head) *Self-contained and remote. If remote unit, high side is 208-230/60/1.* E 230/50/1 (icemaking head) *Self-contained only.* F 115/60/1 (icemaking head) *Remote only. High side is 208-230/60/3.*	400 up to 454 lbs (206kg) 700 up to 750 lbs (340kg) 1000 up to 1036 lbs (471kg) 1400 up to 1450 lbs (658kg) 1650 up to 1580 lbs (717kg)	A Air-cooled, self-contained W Water-cooled, self-contained R Air-cooled, remote condensing unit N Air-cooled, no condensing unit for connection to parallel rack system	V Vision™ H Harmony™ B Ice storage bin J Drop-in M Ice Manager™ diverter valve system	S RIDE® *(RIDE remote ice delivery equipment)* T Top-mount

⚠ CAUTION

- Outdoor installation of low side is not recommended and will void warranty.
- Moving parts. Do not operate with front cover removed.
- Hot parts. Do not operate with cover removed.
- To reduce risk of shock, disconnect power before servicing.
- To prevent circuit breaker overload, wait 15 minutes before restarting this unit. This allows the compressor to equalize and the evaporator to thaw.
- Most ice machine cleaners contain citric or phosphoric acid, which can cause skin irritation. Read caution label on product and follow instructions carefully.
- Ice is slippery. Maintain counters and floors around dispenser in a clean and ice-free condition.
- Ice is food. Follow recommended cleaning instructions to maintain cleanliness of delivered ice.

Specifications

Electrical

Separate circuit and equipment ground required.

Evaporator unit

Standard electrical: 115/60/1
Maximum fuse: 15A
Amperage: 6A

Condensing unit

	Single-Phase
Electrical	208-230V, 60Hz
Maximum Circuit HVACR breaker size	15A
Minimum Circuit Ampacity	10.7A

Evaporator plumbing

- 3/8" OD push-in water inlet
- 3/4" MPT
- 3/4" vented drain line must slope a minimum of 1/4" per foot (6 mm per 30.4 cm run).
- Drain to be hard piped and insulated.
- Water shut-off recommended within 10 feet (3 m).
- Follett recommends installation of Follett water filter system (part# 00130286) in ice machine inlet water line.

Ambient

Evaporator unit		
Air temperature	100 F/38 C max.	50 F/10 C min.
Water temperature	90 F/32 C max.	45 F/7 C min.
Water pressure	70 psi max. (483 kPa)	10 psi min. (69 kPa)
Condenser unit		
Air temperature	120 F/49 C max.	–20F/–29C min.

Refrigeration

- 3/8" liquid line
- 5/8" suction line

Note: Rack system installations require a capacity of 6,000 BTU/hr at 0 F (–18 C) evaporator temperature. Evaporator pressure regulator (not supplied) is required.

Weight

Evaporator unit: 125 lbs (57 kg)
Condensing unit: 225 lbs (102 kg)

Ice production

Air-cooled ice machine capacity/24 hrs.

Ambient Air Temperature F/C							
Inlet Water Temperature F/C	F	60	70	80	90	100	
	C	16	21	27	32	38	
	50	747	678	644	586	565	lbs
	10	339	308	292	266	256	kg
	60	714	673	618	559	529	lbs
	16	324	305	280	254	240	kg
	70	671	643	589	**528**	512	lbs
	21	304	292	267	**239**	232	kg
	80	649	609	561	506	478	lbs
	27	294	276	254	230	217	kg
	90	600	583	535	499	441	lbs
	32	272	264	243	226	200	kg

Dimensions and clearances

Entire front of ice machine must be clear of obstructions/connections to allow removal.

- 1" (26 mm) clearance above ice machine for service.
- 1" (26 mm) minimum clearance on sides.

Front View **Side View** **Back View**

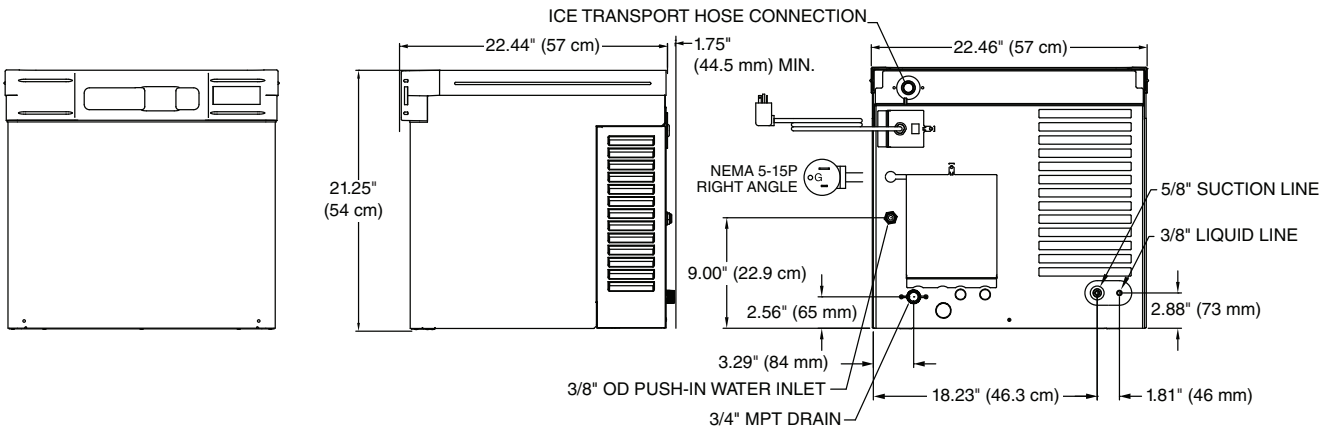

Single-Phase Condensing Unit

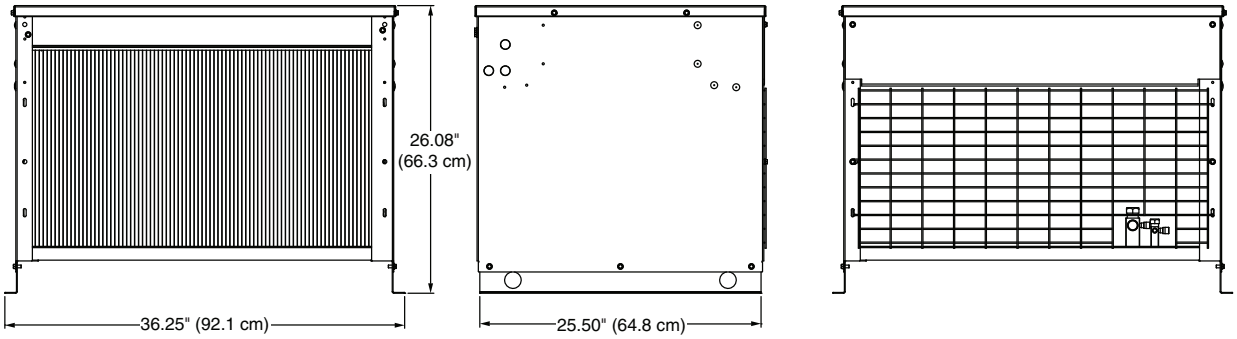

Operation

Cleaning and preventive maintenance (all models)

Note: Do not use bleach to sanitize or clean the ice machine.

Preventive maintenance

Periodic cleaning of Follett's ice machine system is required to ensure peak performance and delivery of clean, sanitary ice. The recommended cleaning procedures that follow should be performed at least as frequently as recommended, and more often if environmental conditions dictate.

Cleaning of the condenser can usually be performed by facility personnel. Cleaning of the ice machine system, in most cases, should be performed by your facility's maintenance staff or a Follett authorized service agent. Regardless of who performs the cleaning, it is the operator's responsibility to see that this cleaning is performed according to the schedule below. Service problems resulting from lack of preventive maintenance will not be covered under the Follett warranty.

Weekly exterior care

The exterior may be cleaned with a stainless cleaner such as 3M Stainless Steel Cleaner & Polish or equivalent.

Monthly condenser cleaning (air-cooled ice machine only)

1. Use a vacuum cleaner or stiff brush to carefully clean condenser coils of air-cooled ice machines to ensure optimal performance.
2. When reinstalling counter panels in front of remote ice machines, be sure that ventilation louvers line up with condenser air duct.

Semi-annual evaporator cleaning (every 6 months)

⚠ WARNING

- Wear rubber gloves and safety goggles (and/or face shield) when handling ice machine cleaner or sanitizer.

⚠ CAUTION

- Use only Follett approved SafeCLEAN™ Cleaner (part #00132001) and NU-CALGON IMS-II or IMS-III SANITIZER.
- Do not mix Cleaner and Sanitizer solutions together.
- DO NOT USE BLEACH.
- It is a violation of Federal law to use these solutions in a manner inconsistent with their labeling.
- Read and understand all labels printed on packaging before use.

Note: Complete procedure for cleaning an sanitizing MUST be followed. Ice must be collected for 10 minutes before putting ice machine back into service.

1. To clean – Remove cover. Press the CLEAN button. The machine will drain. Wait for the LO WATER light to come on **(Fig. 1)**.

Fig. 1

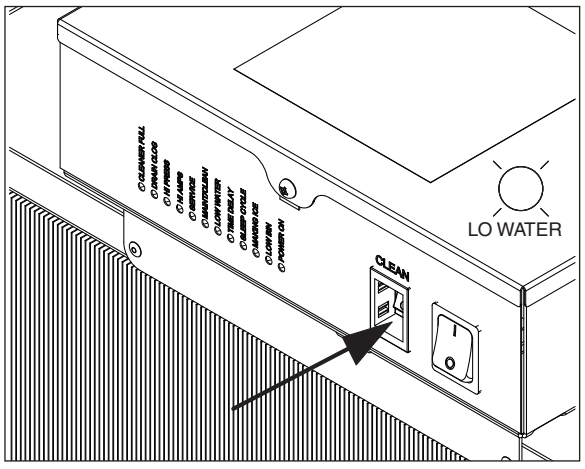

Fig. 2

2. Mix 1 gallon (3.8L) 120 F (49 C) water and 7 ounces (198g) (one 7 ounce packet of Follett SafeCLEAN ice machine cleaner, part# 00132001). Locate cleaning cup. Fill until CLEANER FULL light comes on (Fig. 2).
Note: Do not use bleach to sanitize or clean the ice machine.

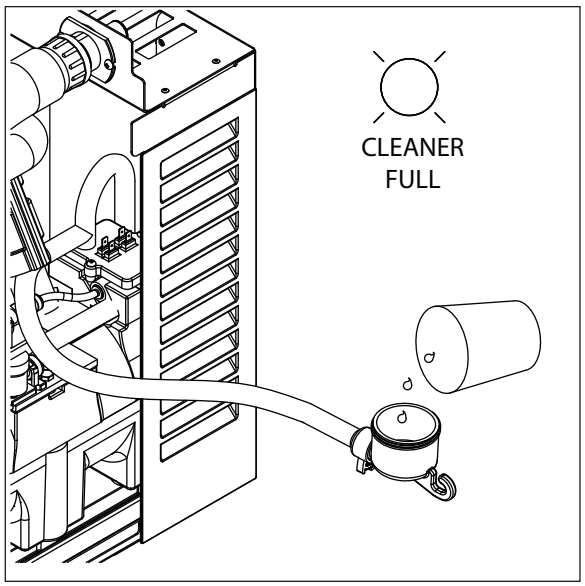

Fig. 3

3. Replace cover on cleaning cup. Wait until machine restarts. Machine will clean, then flush 3 times in approximately 15 minutes (Fig. 3).

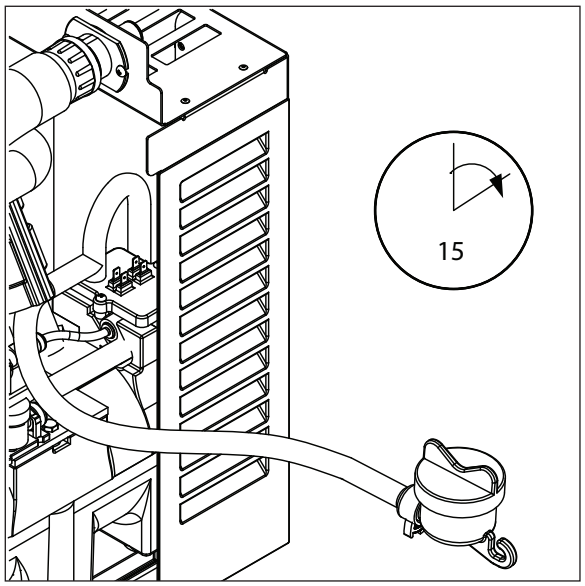

Fig. 4

4. To sanitize – Press CLEAN button. The machine will drain. Wait for LO WATER light to come on (Fig. 4).

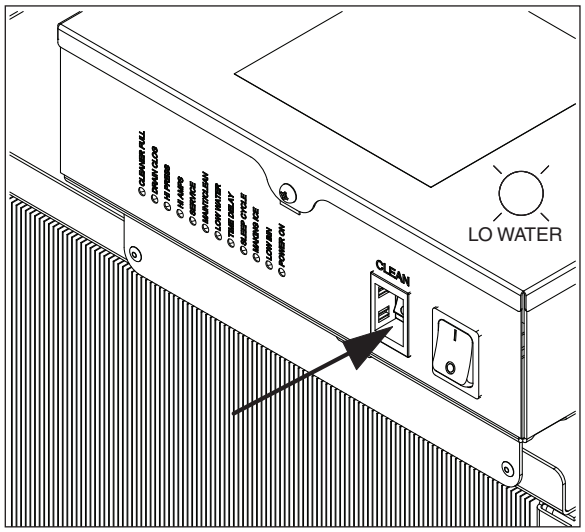

5. Mix 1 gallon 120 F (49 C) water and 1.6 ounces (48ml) NU-CALGON IMS-II or IMS-III SANITIZER. Fill until CLEANER FULL light comes on (Fig. 5).
Place one Sani-Sponge™ in remaining sanitizing solution and retain for Step 9.

Note: Do not use bleach to sanitize or clean the ice machine.

Fig. 5

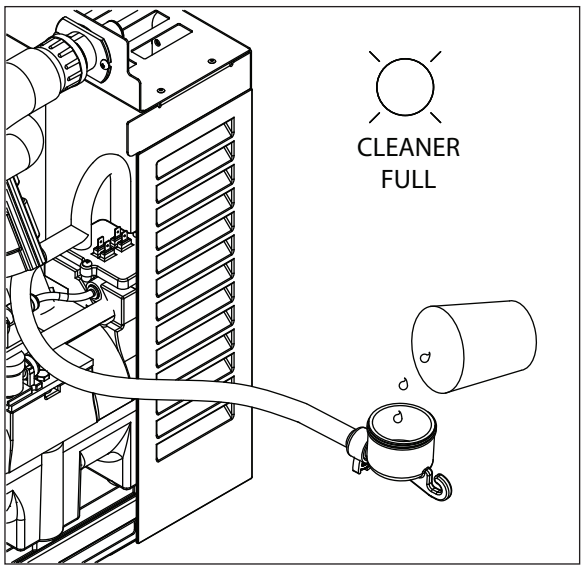

Fig. 6

6. Replace cover on cleaning cup. Wait until machine restarts. Machine will clean, then flush 3 times in approximately 15 minutes (Fig. 3).

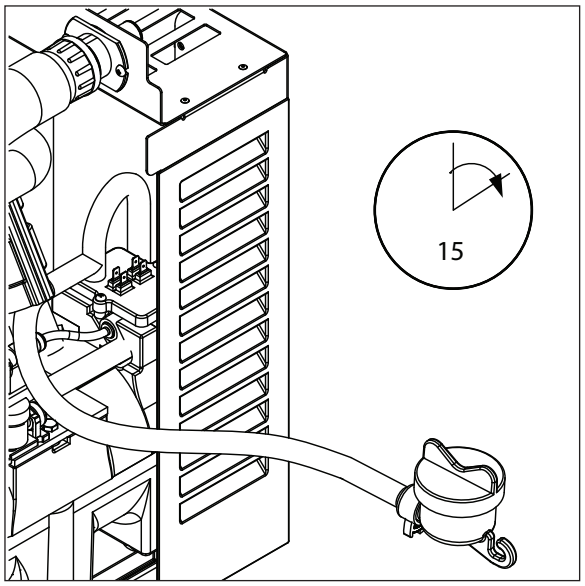

Fig. 7

7. Disconnect coupling as shown (Fig. 7).

Note: Steps 8-11 *must* be completed before machine flushes and starts producing ice.

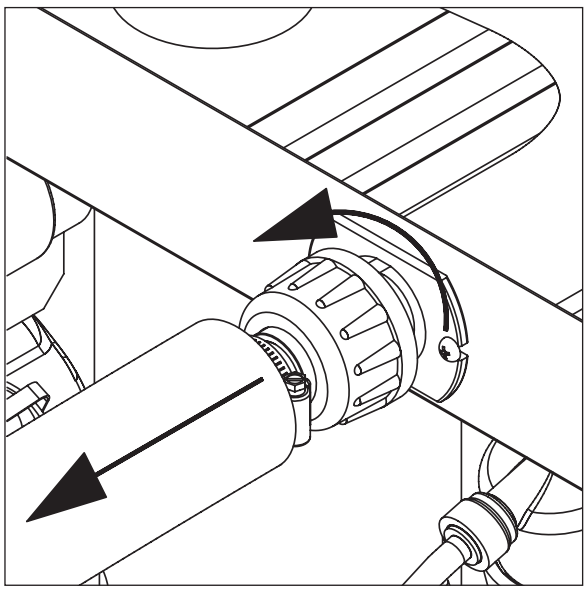

Fig. 8

8. Using disposable food service grade gloves, insert dry Sani-Sponge™ (kit part# 00132068). Next, insert Sani-Sponge soaked in Nu-Calgon IMS-II or IMS-III sanitizer solution (from Step 5). Push both Sani-Sponges down ice transport tube with supplied pusher tube (Fig. 8).

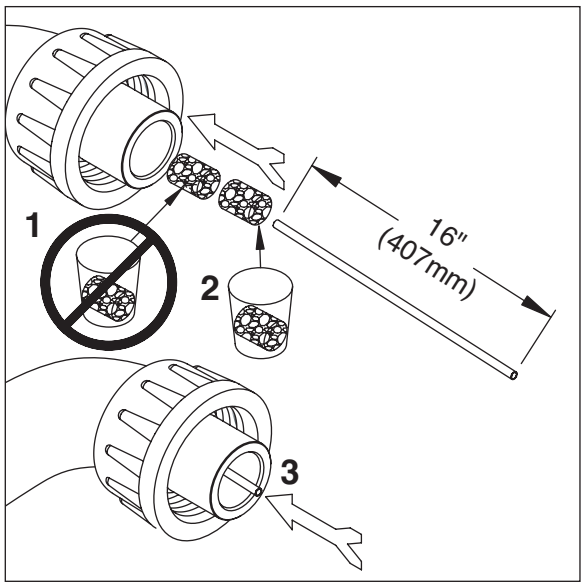

Fig. 9

9. Remove and discard 16" (407mm) pusher tube (Fig. 9).

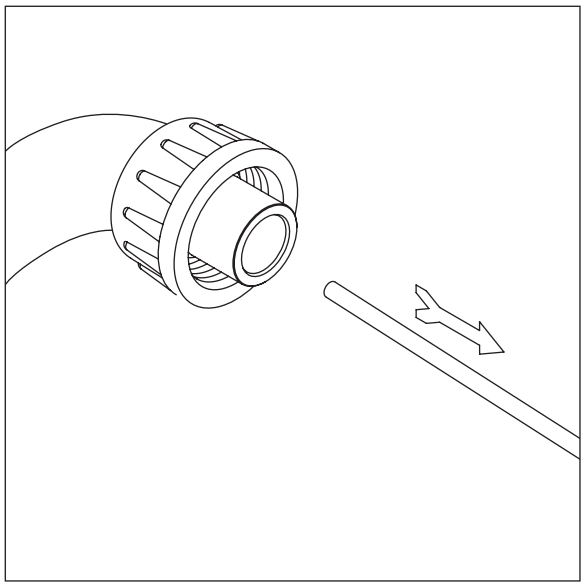

10. Reconnect coupling. When sanitizing cycle ends, machine will start producing ice. Press power switch ON. Ice pushes Sani-Sponges through tube (Fig. 10).

Fig. 10

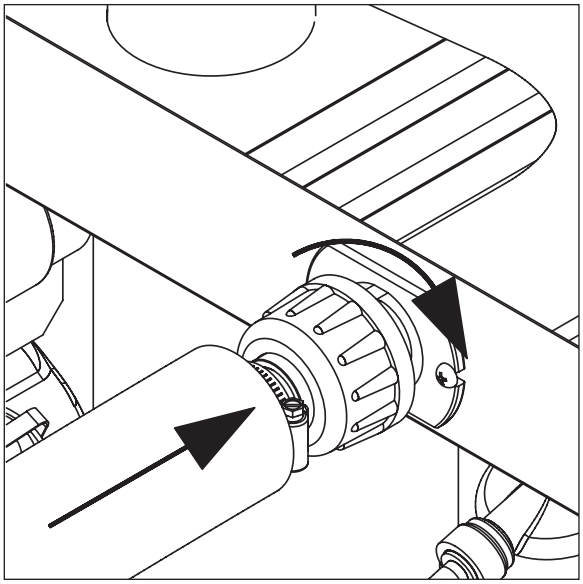

Fig. 11

11. Place a sanitary (2 gallon or larger) container in bin or dispenser to collect Sani-Sponges and ice for 10 minutes. Collect 5.5 lbs (3kg) of ice from unit. Discard ice and Sani-Sponges (Fig. 11).

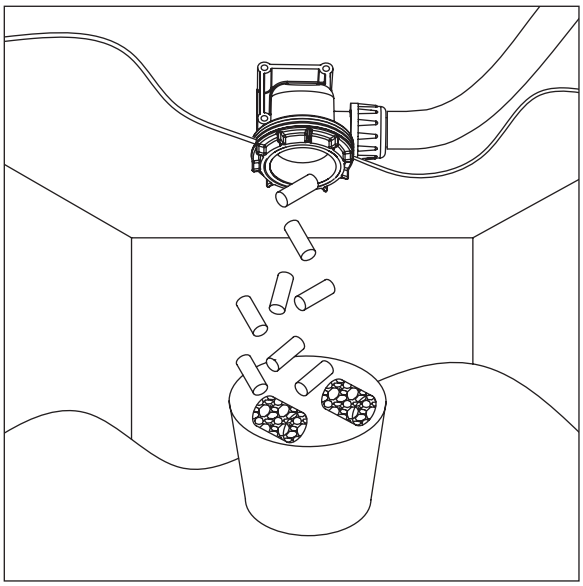

Service

Ice machine operation (all models)

Follett's ice machine consists of five distinct functional systems covered in detail as follows:

- Water system
- Electrical control system
- Mechanical assembly
- Refrigeration system
- Bin full

The Horizon ice machine overview

The Follett Horizon ice machine uses a horizontal, cylindrical evaporator to freeze water on its inner surface. The refrigeration cycle is continuous; there is no batch cycle. The evaporator is flooded with water and the level is controlled by sensors in a reservoir. A rotating auger (13 RPM) continuously scrapes ice from the inner wall of the evaporator. The auger moves harvested ice through the evaporator into an ice extrusion canal. The ice is forced through a restrictive nozzle that squeezes out the water and creates the Chewblet. The continuous extrusion process pushes the Chewblets through a transport tube into a dispenser or bin.

A solid state PC board controls and monitors the functionality of the ice machine. In addition to sequencing electrical components, the board monitors various operational parameters. A full complement of indicator lights allows visual status of the machine's operation. Additionally, the PC board controls the self-flushing feature of the ice machine. The evaporator water is periodically drained and replenished to remove minerals and sediment.

A unique "bin full" detection system is incorporated in the Horizon ice machine. A switch located at the ice discharge port of the machine detects the position of the transport tube. When the bin fills up with ice, the transport tube moves out of the normal running position, and the switch turns the ice maker off. A domed housing at the end of the transport tube contains the ice extrusion loads during shut down.

Harvest system diagram

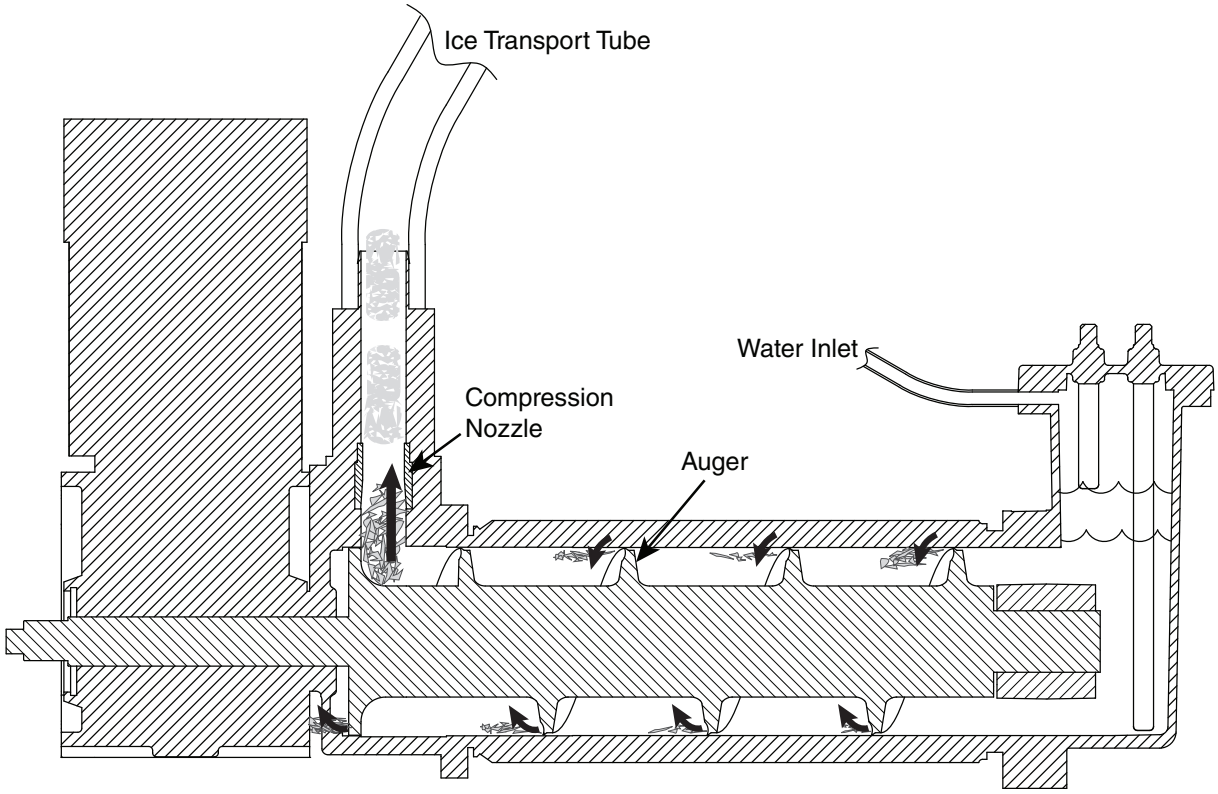

Water system

The water level in the evaporator is controlled by a feed solenoid and level detecting sensors. Referencing the diagram below, water sensing rods extend down into the reservoir at the end of the evaporator assembly. The system works via electrical conductivity as follows:

One of the longest probes is a common. When water is between any of the other probes and the common, the PC board will sense the activation. During normal operation, the water level rises and falls between the Normal High and Normal Low sensors. As water is consumed to make ice, the level will fall until the Normal Low sensor is exposed, triggering the water feed solenoid on. Water will fill until the Normal High sensor is activated.

Note: The potable water dissolved solids content must be greater than 10 ppm for the water control system to function properly. If using reverse osmosis water filtration system, ensure T.D.S level is greater than 10 ppm.

Water system diagram

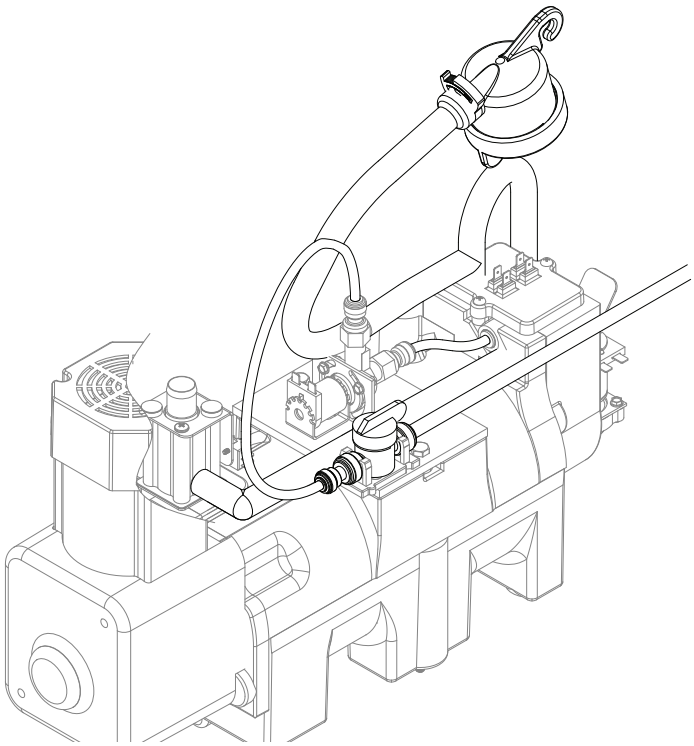

Water level diagram

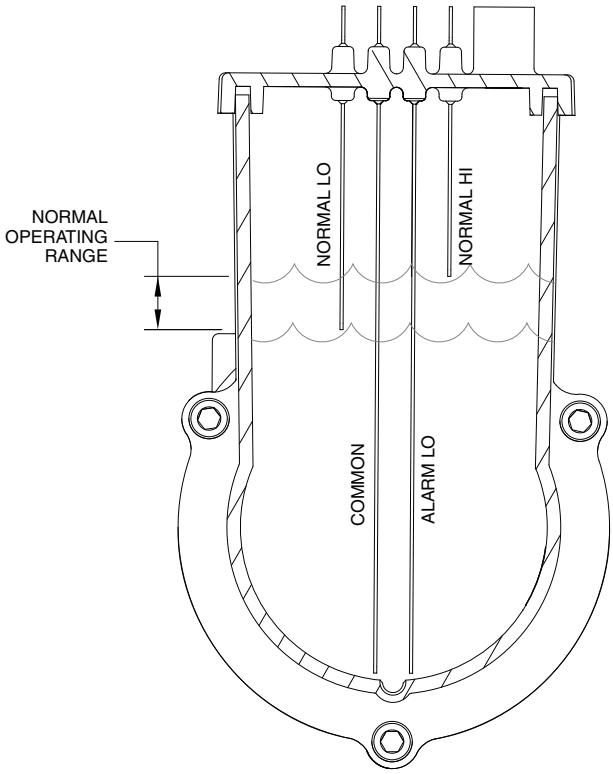

Electrical system

ATTENTION!

To prevent circuit breaker overload, wait 15 minutes before restarting this unit.

Normal control board operation

The PC board indicator lights provide all the information necessary to determine the machine's status. Green indicator lights generally represent “go” or normal operation; Yellow indicators represent normal off conditions; Red indicators generally represent alarm conditions, some of which will lock the machine off.

A flashing green light labeled POWER indicates power to the machine. All other normal operation status indicators are covered as follows:

Ice machine disposition	Operating conditions
Legend: ● ON ○ OFF ◐ ON or OFF ⊗ FLASHING	
1. Ice machine is making ice. CLEANER FULL ○ · DRAIN CLOG ○ · HI PRESS ○ · HI AMPS ○ · SERVICE ○ · MAINT/CLEAN ○ · LOW WATER ○ · TIME DELAY ○ · NOT USED ○ · MAKING ICE ● · LOW BIN ● · POWER ON ⊗	1. **Normal running.**
2. Ice machine is not making ice. CLEANER FULL ○ · DRAIN CLOG ○ · HI PRESS ○ · HI AMPS ○ · SERVICE ○ · MAINT/CLEAN ○ · LOW WATER ○ · TIME DELAY ● · NOT USED ○ · MAKING ICE ○ · LOW BIN ◐ · POWER ON ⊗	2. **Normal time delay.** When the bin fills with ice, the LOW BIN light goes out and the refrigeration and auger drive systems immediately shut down. (**Note:** The fan motor will continue to run for 10 minutes to cool condenser) The TIME DELAY light comes on, initiating the time delay period. When the time delay expires, the machine will restart provided that the LOW BIN light is on. **Note:** The ice machine has a 15-minute startup delay when power is applied to prevent circuit overload.

DIP Switch Settings

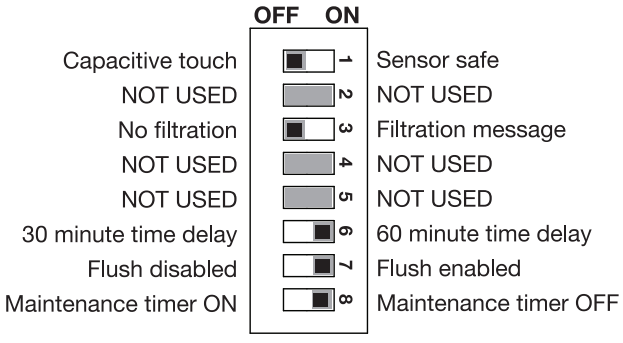

Error faults:

The Horizon PC board monitors various operating parameters including high pressure, auger gearmotor amperage limits, clogged drain, and low water alarm conditions. There are two types of errors namely “hard” or “soft”. A hard error is one that shuts the machine off and will not allow restart until the reset button is pressed. Even cycling power will not reset a hard error. A soft error can either be automatically reset should the condition rectify, or if power is cycled. Should an error occur, consult the troubleshooting guide in this manual or a Follett service technician.

Soft errors:

HI AMPS: The PC board monitors the amperage of the auger motor. Should the gear motor experience current draw above the allowable limit, the machine will shut down and the TIME DELAY and HI AMP will be illuminated. After the time delay the machine will restart and the TIME DELAY and HI AMP will clear.

LO WATER: During operation, the water level cycles between the normal low and normal high sensors. Should the water be shut off to a running machine, a soft error will occur. The error sequence is as follows: During operation, the water level falls to the normal low sensor, and when it does the water feed solenoid is energized. If water is not detected at the normal low sensor within 10 seconds, a soft error will occur. The machine will shut down, but the water feed solenoid will remain energized. Should water return, it will fill to the normal low sensor and the machine will resume normal operation. The error will clear automatically.

HI PRESSURE: Should the refrigeration pressure rise above 425 psi, the machine will shut down and the TIME DELAY and HIGH PRESSURE will be illuminated. After the time delay, and if the pressure has fallen back below the reset point of 295 psi, the machine will restart and the TIME DELAY and HIGH PRESSURE will clear.

Hard error:

DRAIN CLOG: The drain clog sensor, located in the chassis, underneath the rear drain pan, will detect the presence of water just below the top edge of the pan. If water does not properly flow out of the drain pan it will overflow into the chassis and rise to the sensor (especially during a self-flushing purge cycle). Pressing the reset button will restart the ice machine.

Relay output indication:

Each relay on the board has an indicator light associated with its output. For example, when the relay for the water feed solenoid is energized, the adjacent indicator light glows green.

Comp/Sol output:

The output for the liquid line solenoid valve is labeled COMP/SOL.

Flushing logic

Flush on fly: For every one (1) hour of ice making time, the machine will open the drain valve for a duration of 60 seconds. While the drain valve is open, the machine will continue to make ice and the water feed valve will cycle to maintain water level.

Off cycle: At the completion of off-cycle time delay, the machine checks for a cumulative one (1) hour of ice making time since the last off-cycle flush. If the cumulative ice making time exceeds one (1) hour, the machine will open the drain valve for 60 seconds to drain the evaporator in its entirety. It will then refill with water and begin making ice. If the ice making time is less than 1 hour, the machine will start and begin making ice without draining the evaporator.

Wiring diagram, evaporator unit

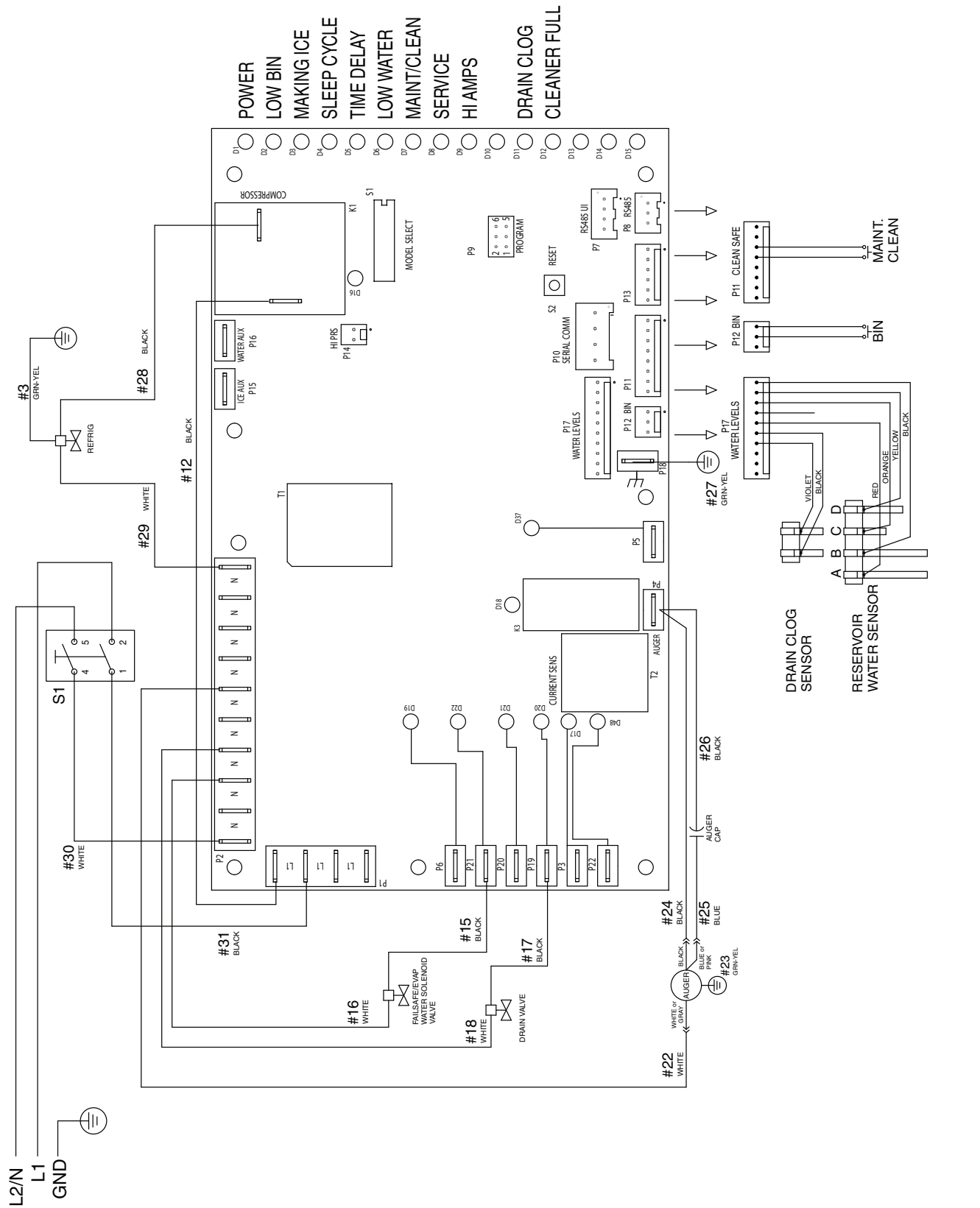

Gearmotor data (Brother)	**Resistance of windings**	
Gearmotor current	**1.1A (nominal)**	
	115 vac gearmotor (Brother):	**white to black 16Ω**
		white to blue 16Ω
		blue to black 32Ω
Locked rotor amps	**2A**	

Single-phase condensing unit wiring diagram

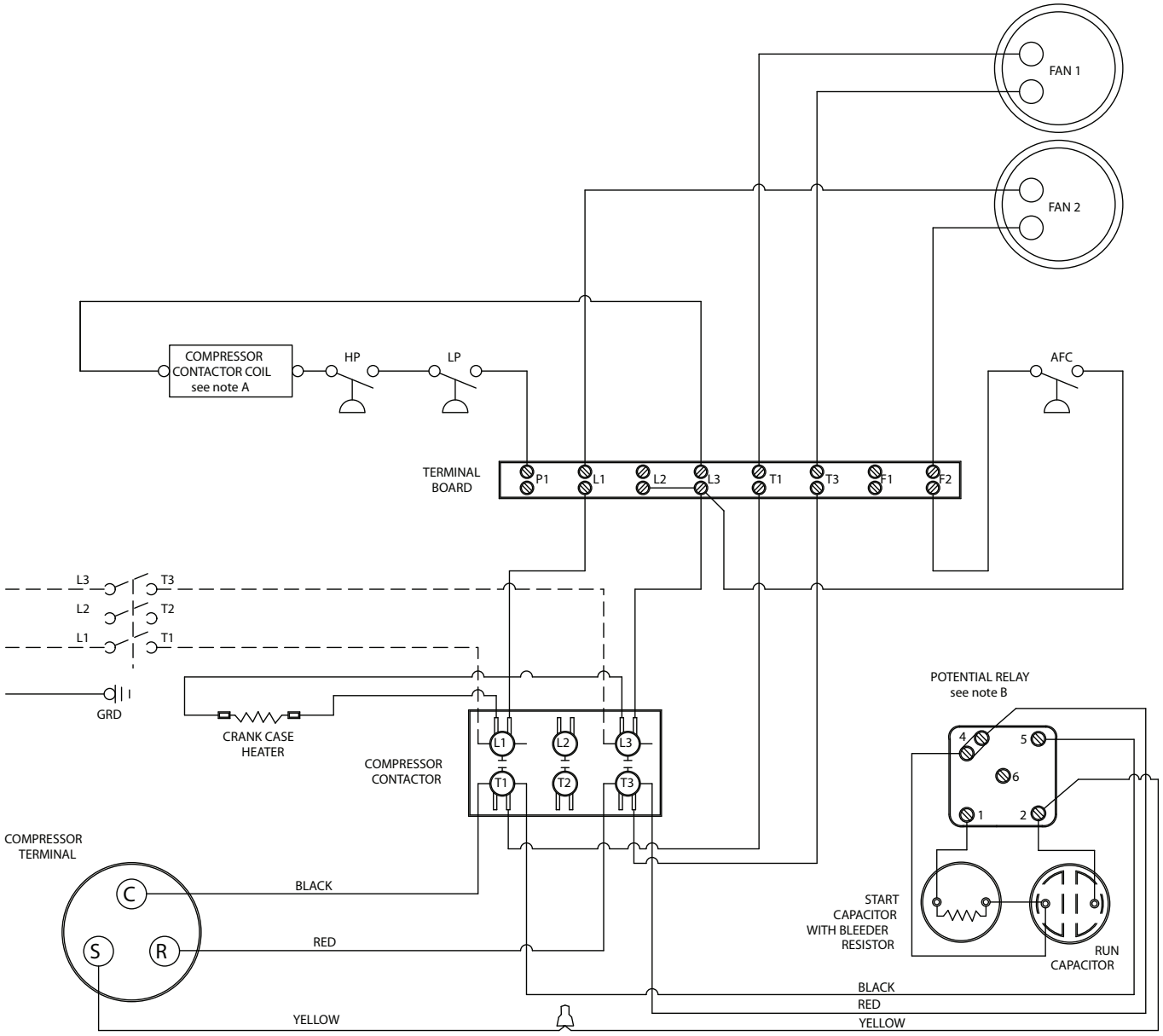

Mechanical System

Evaporator disassembly

1. Press CLEAN button to purge evaporator. Turn power OFF when LO WATER lights.
2. Unscrew and disconnect transport tube from louvered docking assembly.

Fig. 12

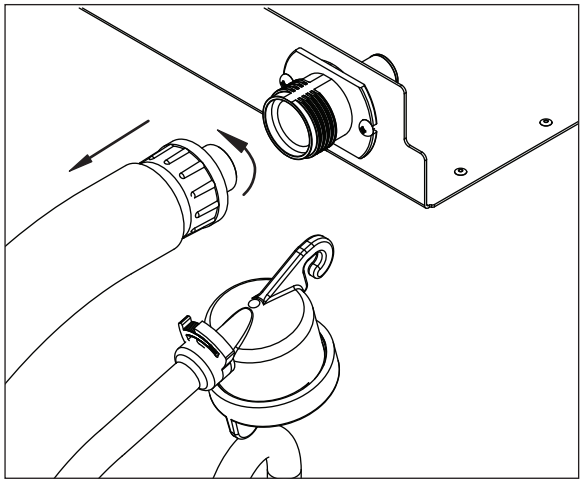

Fig. 13

3. Unplug gear motor.

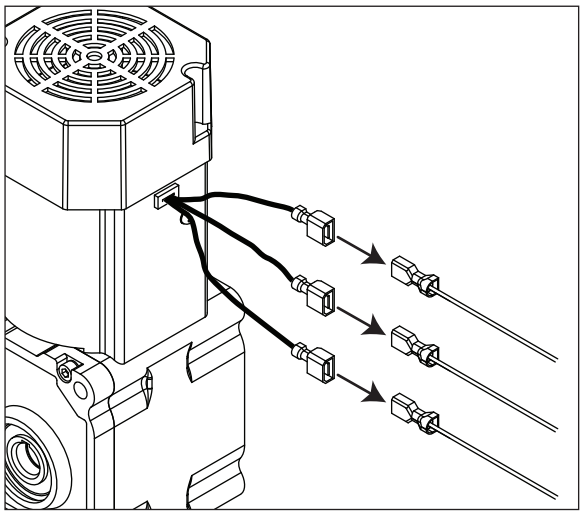

Fig. 14

4. Remove shuttle housing:
   - Remove vent tube **(Fig. 14.1)**.
   - Disconnect shuttle housing switch connections **(Fig. 14.2)**.
   - Remove two screws and lift shuttle housing **(Fig. 14.3)**.
   - Remove stream divider **(Fig. 14.4)**.

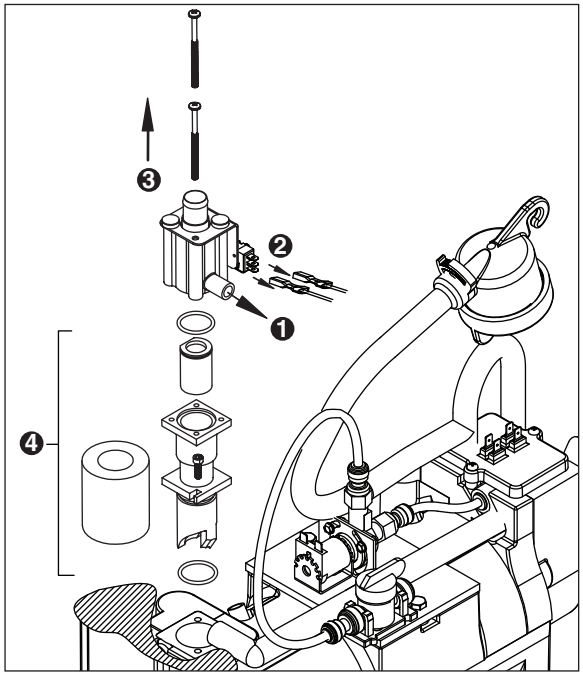

Fig. 15

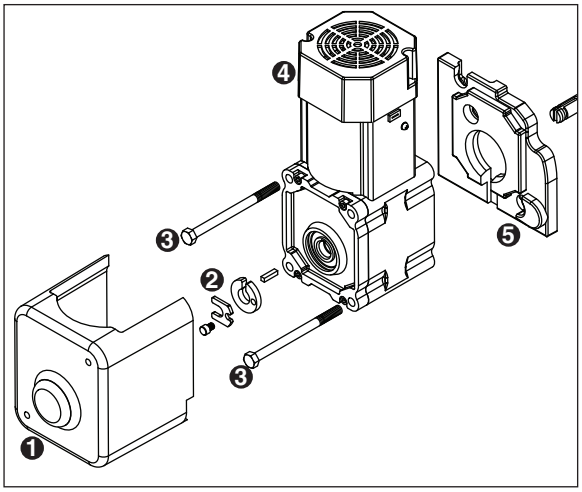

5. Remove gear motor:

- Remove gear motor insulation **(Fig. 15.1)**.
- Remove 1/4-20 screw, retainer, and spacer **(Fig. 15.2)**.
- Remove two 1/2" bolts **(Fig. 15.3)**.
- Pull gear motor from auger **(Fig. 15.4)**.
- Remove main housing insulation **(Fig. 15.5)**.

6. Remove all traces of petro-gel from auger shaft.

Fig. 16

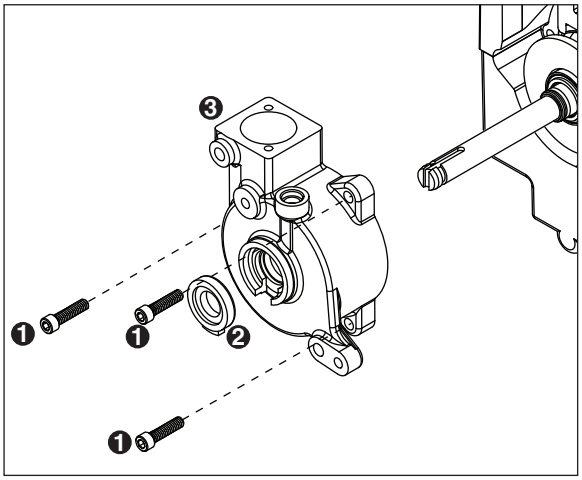

7. Remove main housing:

- Use an allen wrench to remove 3/16" allen screws (3) **(Fig. 16.1)**.
- Remove shaft insulation **(Fig. 16.2)**.
- Remove main housing **(Fig. 16.3)**.

Fig. 17

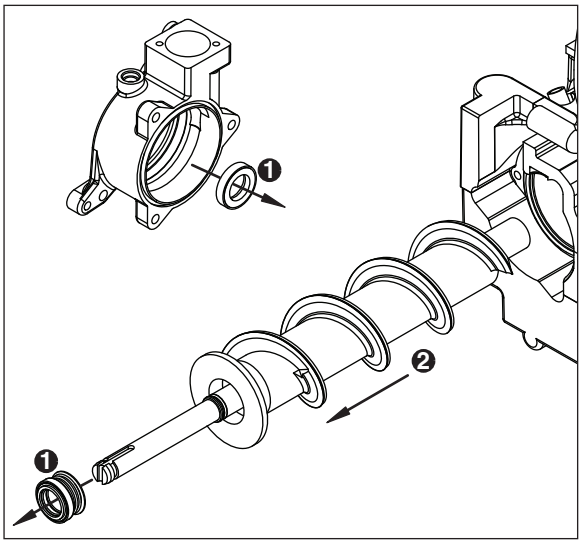

8. Remove and discard mating ring and seal **(Fig. 17.1)**.

9. Carefully remove auger **(Fig. 17.2)**.

WARNING!

Use caution when removing auger. The auger is very sharp - handle with care to avoid personal injury.

10. Press the lever on the back of the reservoir **(Fig. 18.1)** to release and remove the solenoid **(Fig. 18.2)**.

Fig. 18

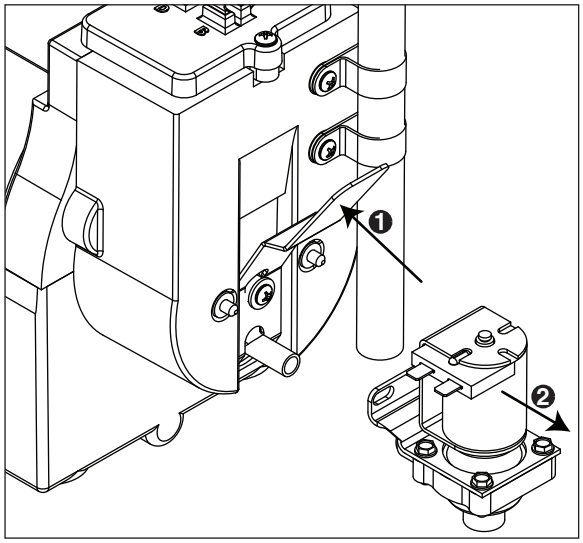

11. Remove three screws to remove the reservoir insulation **(Fig. 19)**.

Fig. 19

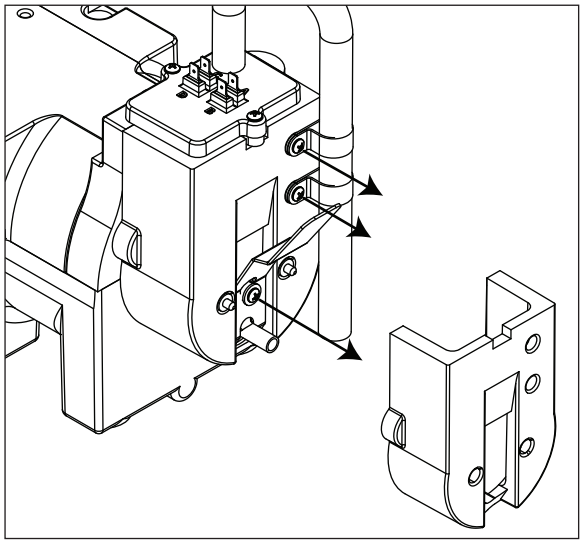

12. Remove three screws to remove the reservoir **(Fig. 20)**.

Fig. 20

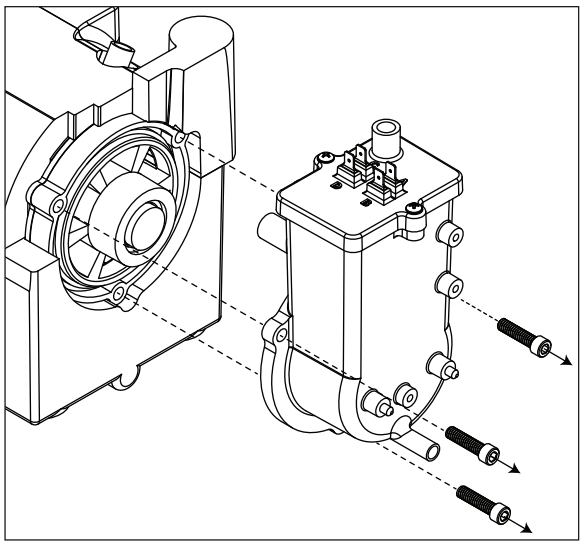

13. To remove the rear bushing, place the auger into the evaporator and use it to gently tap and dislodge the rear bushing housing **(Fig. 21)**.

Fig. 21

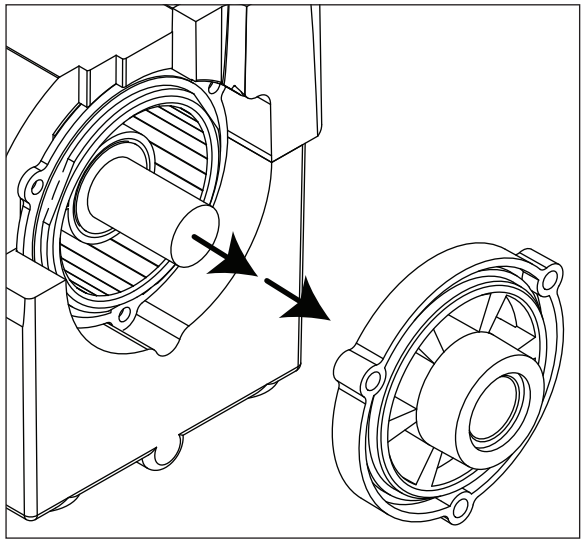

Fig. 22

Evaporator reassembly

1. Remove and inspect O ring seal. Replace if damaged in any way.

2. Place rear bushing into evaporator.

3. Install the three bolts: partially tighten each bolt, alternating bolts until the rear bushing is fully seated and properly aligned **(Fig. 22)**.

4. When fully seated, remove the bolts.

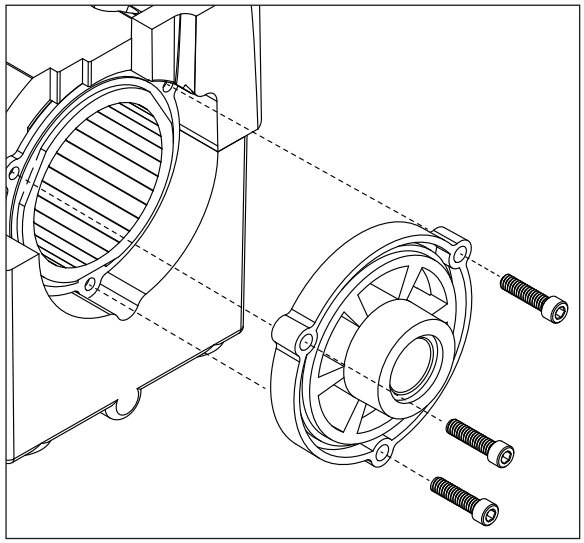

Fig. 23

5. Install the reservoir with three bolts **(Fig. 23)**.

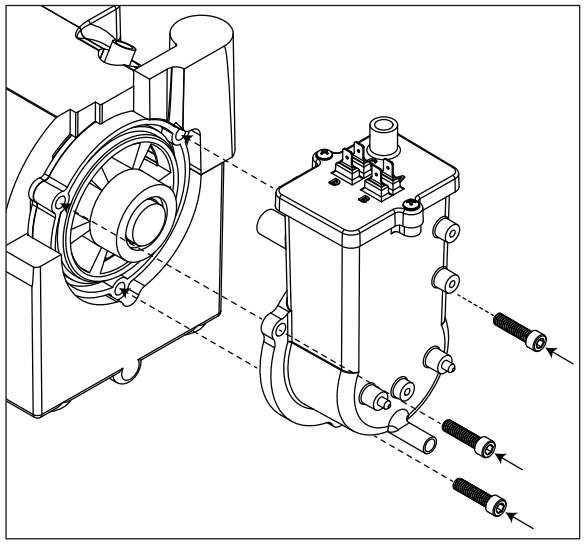

6. Install the reservoir insulation, tube clamp, and solenoid lever with three screws.

7. Install solenoid.

Fig. 24

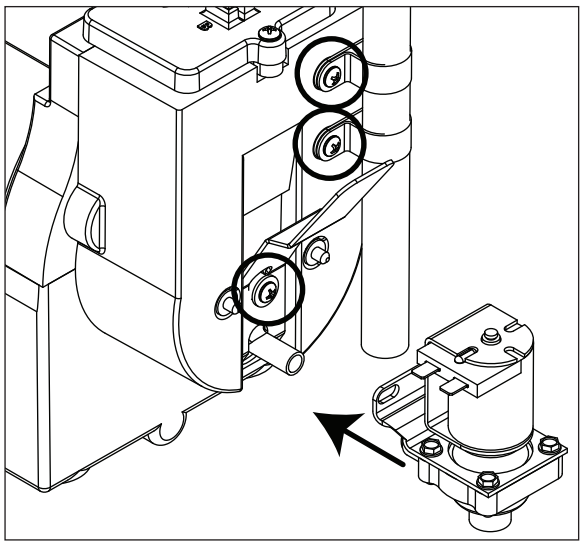

1. Remove and inspect O ring seal. Replace if damaged in any way **(Fig. 25.1)**.

2. Clean O ring groove. Lubricate O ring with petrol-gel and reinstall **(Fig. 25.2)**.

Fig. 25

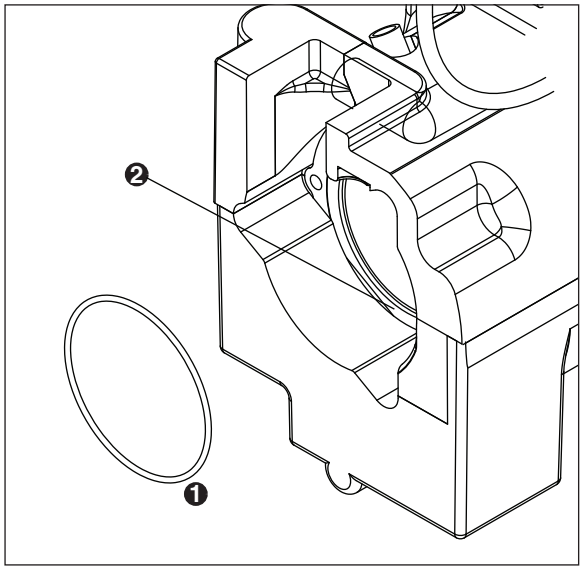

3. Use cardboard disc to press new mating ring into main housing **(Fig. 26.1)**.

4. Lube the shaft with liquid soap in the area shown **(Fig. 26.2)** and slip on seal and spring **(Fig. 26.3)**.

Note: Do not touch the sealing surfaces with bare hands. Contact with bare skin will cause premature seal failure.

5. Install auger **(Fig. 26.4)**.

Fig. 26

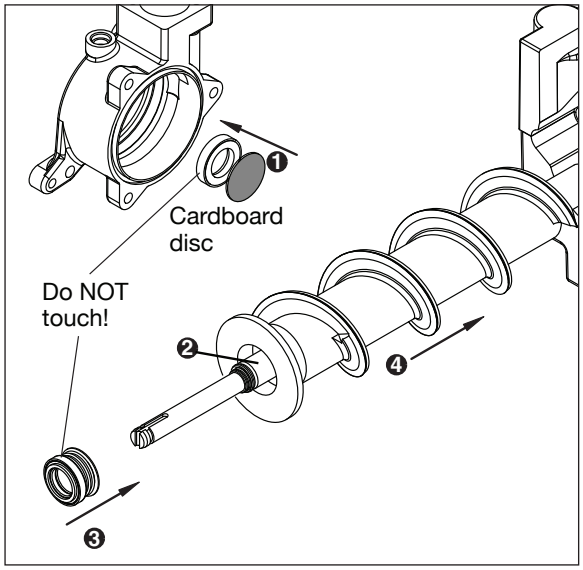

Fig. 27

6. Install main housing:

- Slide main housing onto auger shaft **(Fig. 27.1)**.
- Install main housing insulation **(Fig. 27.2)**.
- Use an allen wrench to install 3/16" allen screws (3) **(Fig. 27.3)**.

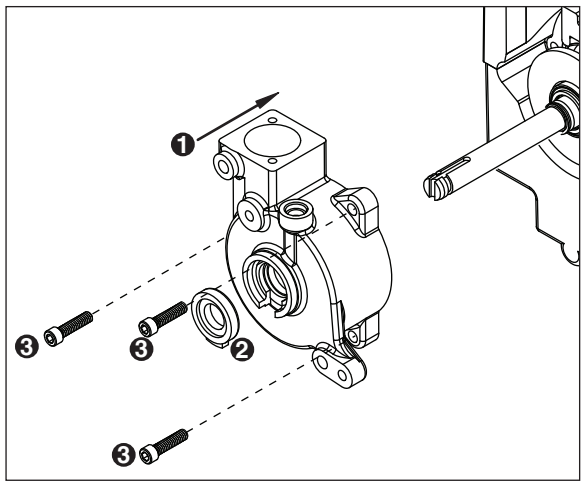

Fig. 28

7. Apply a coat of petrol-gel to the auger shaft.

8. Install gear motor:

- Install main housing insulation **(Fig. 28.1)**.
- Slide gear motor onto the auger shaft **(Fig. 28.2)**.
- Install two 1/2" bolts **(Fig. 28.3)**.

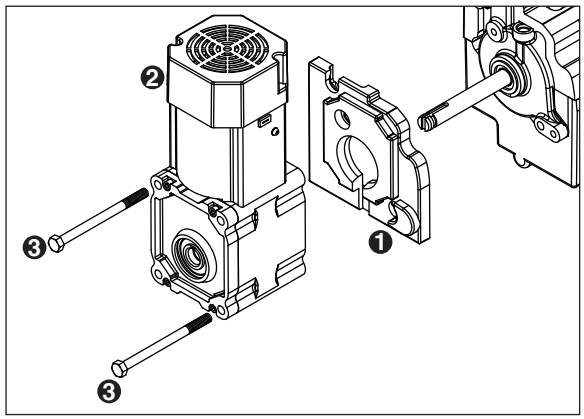

Fig. 29

9. Use screwdriver to orient auger shaft to align with motor shaft keyway **(Fig. 29.1)**.

10. Install key into keyway **(Fig. 29.2)**.

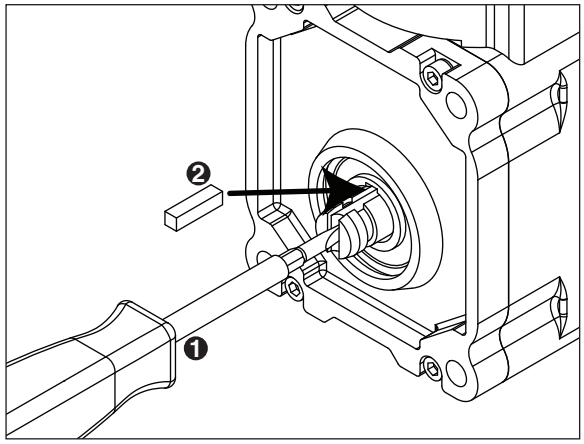

Fig. 30

11. Install spacer, ensure that key is captured in slot **(Fig. 30.1)**

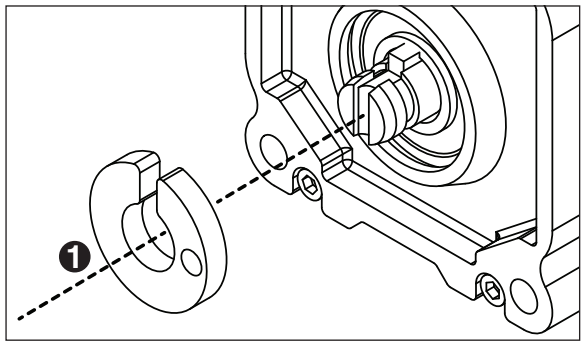

12. Insert screwdriver into groover of auger shaft and pry shaft outwards **(Fig. 31.1)**.

13. Insert retainer into groove **(Fig. 31.2)**, ensure that retainer is aligned with hole in spacer.

Fig. 31

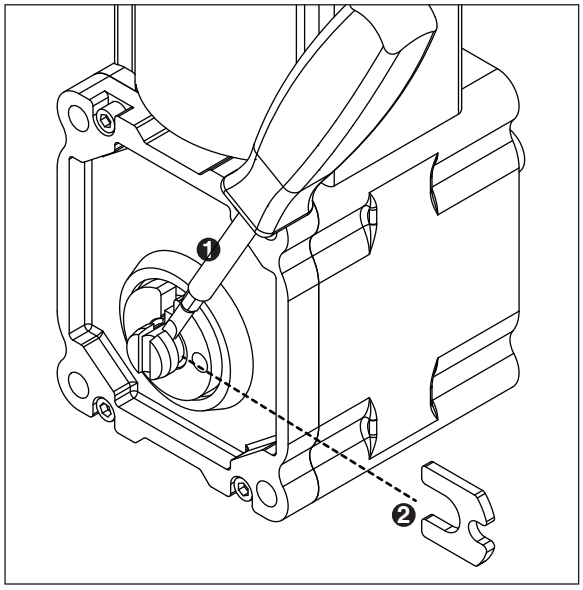

Fig. 32

14. Install screw and tighten **(Fig. 32.1)**.

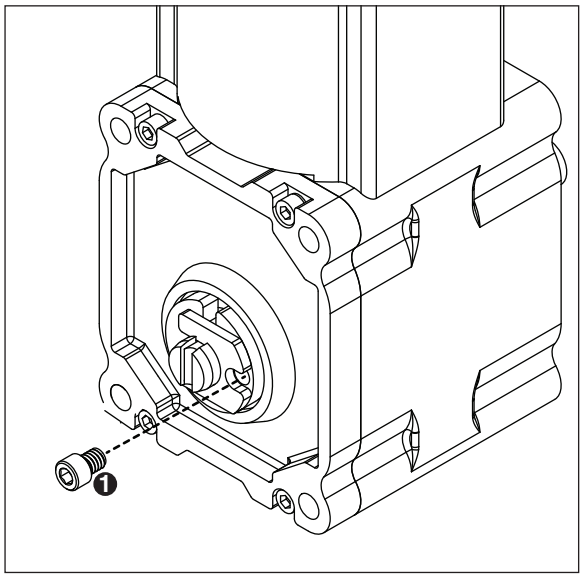

Fig. 33

15. Install gear motor insulation.

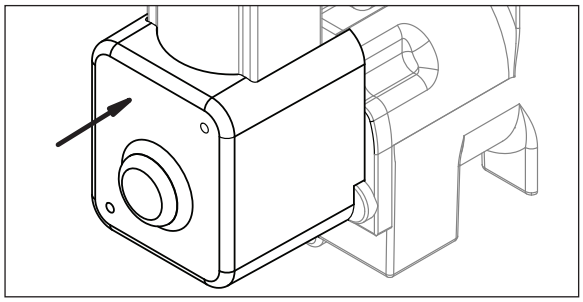

16. Install shuttle housing:

- Install stream divider **(Fig. 34.1)**.
- Place shuttle housing and install two screws **(Fig. 34.2)**.
- Plug in shuttle housing connections **(Fig. 34.3)**.
- Connect vent tube **(Fig. 34.4)**.

Fig. 34

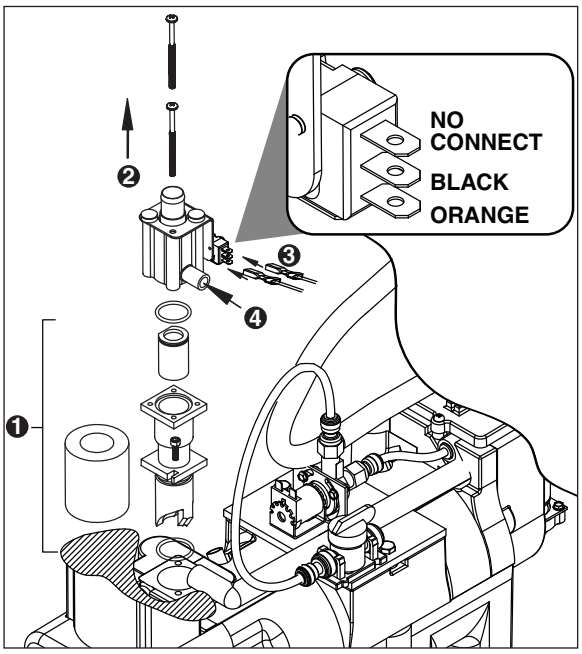

Fig. 35

17. Plug in gear motor.

- BROWN to BLUE
- BLACK to BLACK
- WHITE to GRAY

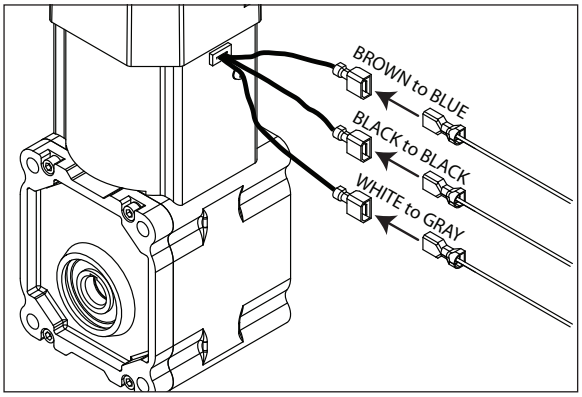

Fig. 36

18. Connect transport tube to louvered docking assembly.

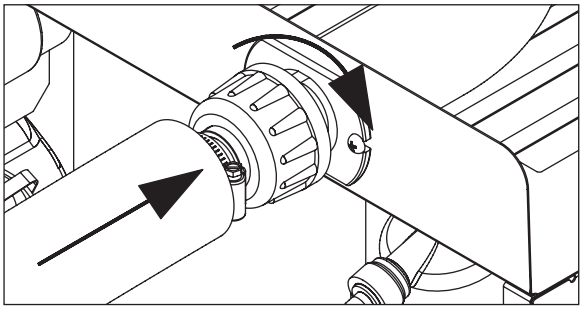

Refrigeration system

Condenser unit operation

The condensing unit is weatherproof and equipped to operate in ambient temperatures from –20 F to 120 F (–29 C to 48.9 C). The condensing unit is controlled by a low pressure control, which works in concert with a refrigerant solenoid valve on the evaporator module. On start-up, the refrigerant solenoid valve opens and suction pressure rises above the “on” set point of the control. The compressor and fan turn on and the refrigeration system operates. Upon shut down, the refrigerant solenoid closes. The compressor will pump down the ice machine evaporator and suction line until the low “off” set point is reached, at which point the compressor and fan will turn off.

Low ambient operation: Reliable operation at low outdoor ambient temperature is achieved with a pumpdown cycle, a crankcase heater and a head pressure control valve. When the outdoor ambient falls, the condensing pressure falls. This causes the discharge pressure to fall as well. When the discharge pressure falls below the dome pressure, the valve modulates open to the discharge port which allows discharge gas to bypass the condenser. Mixing the discharge gas with the liquid creates a high pressure at the condenser outlet, reducing the flow and causing liquid to back up in the condenser. Flooding the condenser reduces the area available for condensing. This reduction in effective condenser surface area results in a rise in condensing pressure. During summer conditions, the discharge pressure is high, thus closing the discharge port of the valve. Hence, there is full liquid flow from the condenser to the receiver.

A check valve is installed in the liquid line between the receiver and the condenser to prevent liquid migration from the receiver to the condenser during the off cycle. The low pressure control will start the condensing unit anytime the low side pressure rises above the set point and pump the refrigerant out until the pressure falls to the set point. The crankcase heater, which is energized whenever the condensing unit has power, keeps the compressor oil warmer than the coldest location in the system. This minimizes off cycle refrigerant migration. If power to the condensing unit is interrupted after the system is charged, the compressor should not be started unless the crankcase heater has been energized for at least 24 hours immediately prior to compressor startup. However the compressor can safely be started during the refrigeration system charging process (without the warm-up period) once sufficient refrigerant is in the system to maintain a positive pressure on the suction side of the compressor.

Under normal ambient operating conditions the left side condenser fan motor, when viewing the outdoor condensing unit from the compressor side, is not energized; therefore, the fan will pinwheel. During hot summer days, at elevated temperatures, the left side condenser fan will be energized to maintain the BTU efficiency of the condensing unit.

For additional information, please reference Horizon ice machine installation instructions for remote condensing units.

Refrigerant pressure data

Air-cooled condensers (air)	60 F/16 C	70 F/21 C	80 F/27 C	90 F/32 C	100 F/38 C
Pressure (psig) discharge/suction	170/27	190/29	211/31	232/34	245/36

R404A ice machine refrigeraant charge specifications

Model	Line Run	Charge
700	0 – 50 ft (0 – 15.2m)	8 lbs (3.6kg)
	50 – 75 ft (15.2 – 22.9m)	9 lbs (4.1kg)
	75 – 100 ft (22.9 – 30.5m)	10 lbs (4.5kg)
	100 ft+ (30.5m+)	Consult factory

Refrigeration system diagram

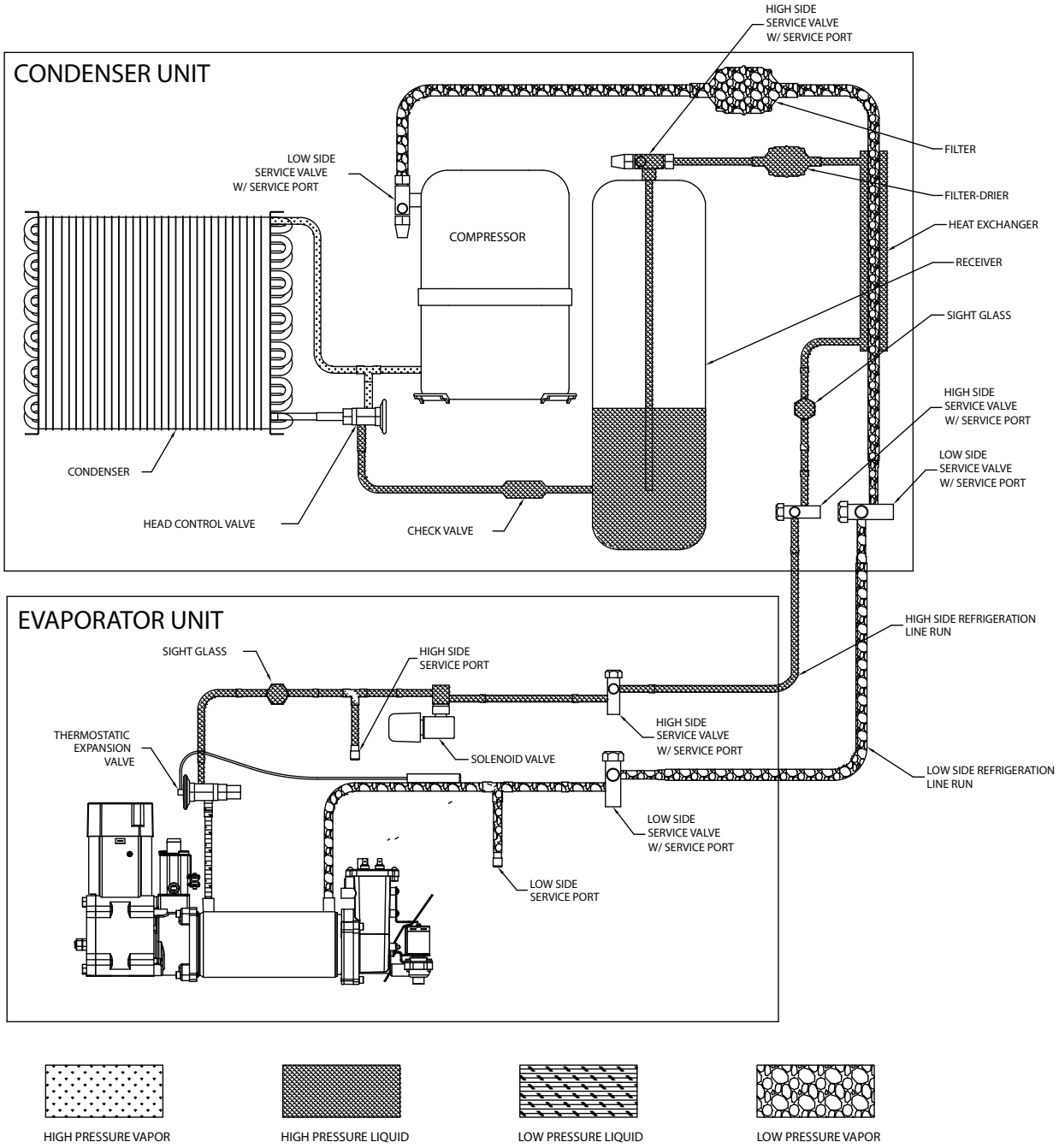

Refrigerant replacement requirements

1. Non-contaminated refrigerant removed from any Follett refrigeration system can be recycled and returned to the same system after completing repairs. Recycled refrigerant must be stored in a clean, approved storage container. If additional refrigerant is required, virgin or reclaimed refrigerant that meets ARI standard 700-88 must be used.
2. In the event of system contamination (for example, a compressor burn out, refrigerant leak, presence of non-condensibles or moisture), the system must be repaired, evacuated and recharged using virgin or reclaimed refrigerant that meets ARI standard 700-88.
3. Follett Corporation does not approve of recovered refrigerants. Improper refrigeration servicing procedures will void the factory warranty.

Evacuation

Evacuate the system to a level of 500 microns. When the 500 micron level is reached, close valves and both manifold and shut down the vacuum pump. Allow the system to sit for approximately 20 minutes. During this period the system pressure should not rise. If the system pressure rises and stabilizes there is moisture in the system and further evacuation is needed. If the pressure continues to rise check the system for leaks.

Ambients (evaporator unit)	**Minimum**	**Maximum**
Air temperature[1]	50 F/10 C	100 F/37.8 C
Water temperature[2]	45 F/7 C	90 F/32.2 C

[1]Ambient air temperature is measured at the air-cooled condenser coil inlet.
[2]Ambient water temperature is measured in the ice machine float reservoir.

Ice capacity test

Ice machine production capacity can only be determined by weighing ice produced in a specific time period.

1. Replace all panels on ice machine.
2. Run ice machine for at least 15 minutes.
3. Weigh and record weight of container used to catch ice.
4. Catch ice for 15 or 20 minutes.
5. Weigh harvested ice and record total weight.
6. Subtract weight of container from total weight.
7. Convert fractions of pounds to decimal equivalents (ex. 6 lbs 8oz = 6.5 lbs).
8. Calculate production using following formula:

$$\frac{\text{1440 min. x wt. of ice produced}}{\text{Total test time in minutes}} = \text{Production capacity/24 hr.}$$

9. Calculated amount per 24 hours should be checked against rated capacity for same ambient and water temperatures in Ice Production Tables.

“Bin full” detection system

The Follett Horizon ice machine incorporates a unique “bin full” detection system that consists of the shuttle and actuator. The shuttle incorporates a flag and switch. Referencing the figure below, the normal running position of the flag is down, and the switch is closed. When the bin fills to the top and ice can no longer move through the tube, the machine will force the shuttle flag up, opening the switch and shutting the machine off. The shuttle actuator, located above the ice bin allows the ice to curl up within it when the bin is full. In this way, there are no loads generated that would tend to lift off the lid of the bin.

Shuttle flag and sensor

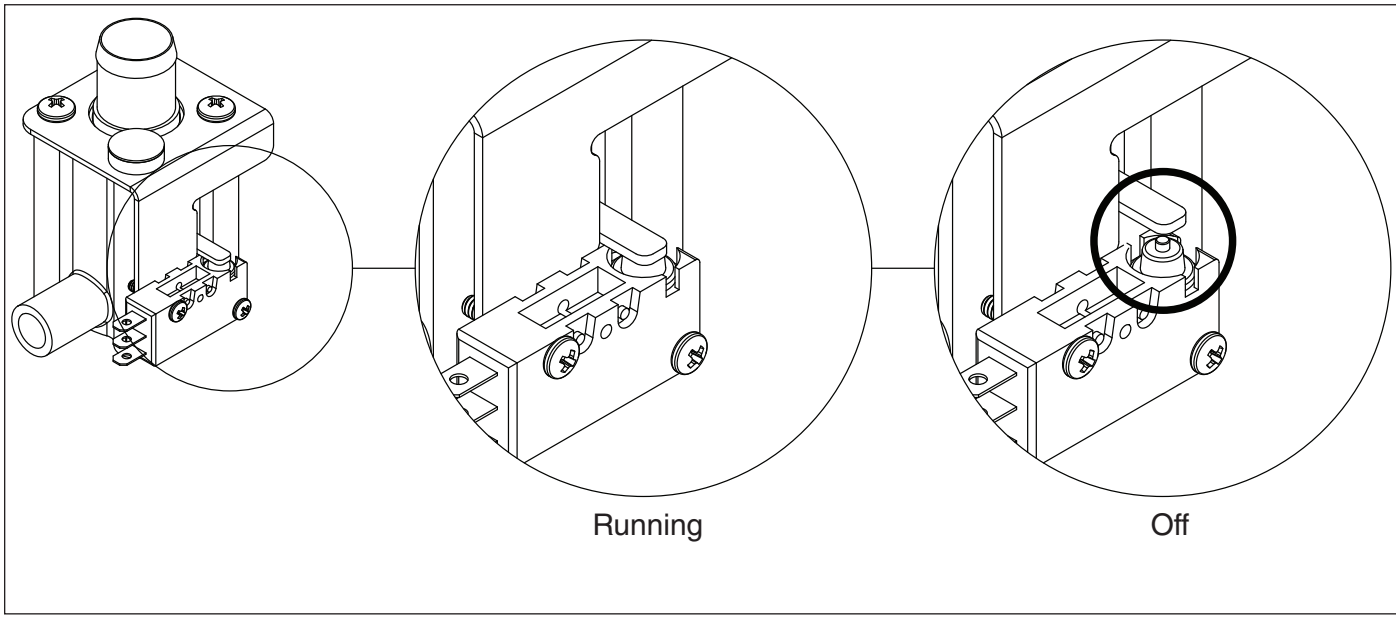

Shuttle actuator

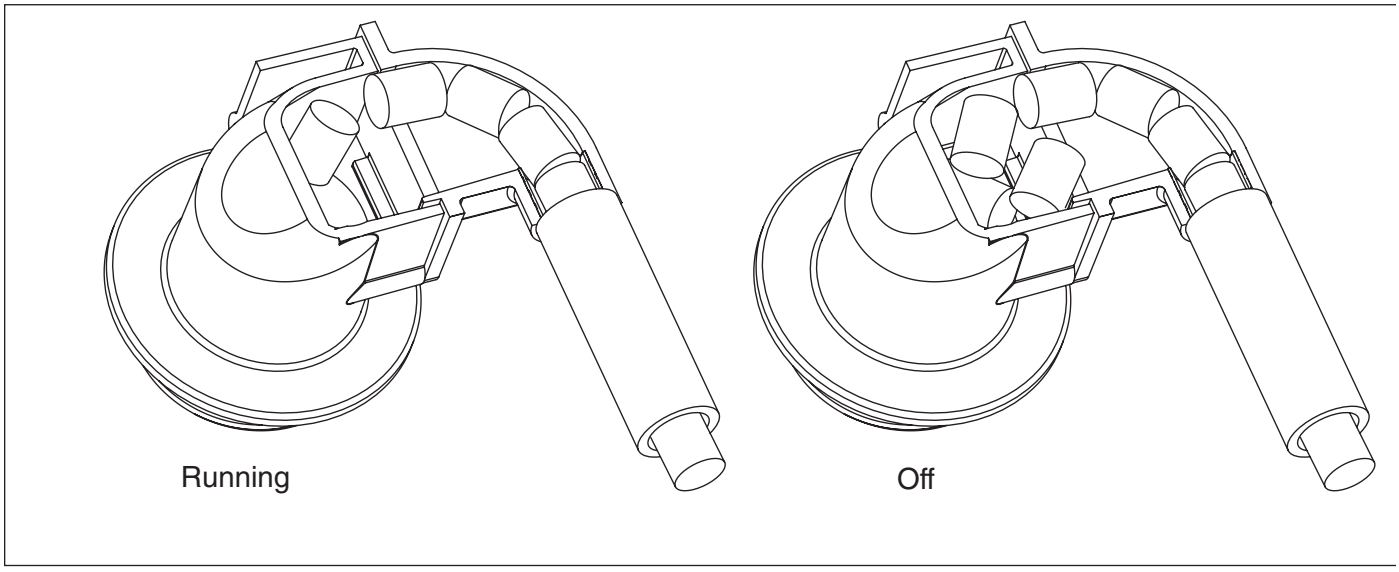

Troubleshooting

Please see “Service” section for a description of each function.

Ice machine disposition	Possible causes	Corrective action
Legend: ● ON ○ OFF ◐ ON or OFF ⊠ FLASHING		
1. Ice machine is in running condition but not making ice.  	1. Defective compressor. 2. Defective start relay. 3. Defective start capacitor. 4. Defective run capacitor. 5. Defective main contactor. 6. No output from PC board. 7. Machine in Purge cycle.	1. Replace compressor. 2. Replace start relay. 3. Replace start capacitor. 4. Replace run capacitor. 5. Replace main contactor. 6. Replace PC board. 7. Check for Purge operation.
2. Machine in TIME DELAY without full bin.  	1. Ice jamming due to improperly installed transport tube causing a false shuttle. 2. Shuttle stuck in up position. 3. Damaged or improperly installed thermostat (open). 4. Transport tube backed-out of coupling.	1. Correct transport tube routing. 2. Repair or replace shuttle mechanism. 3. Replace or reposition thermostat. 4. Correct coupling installation.
3. Ice machine is not making ice. HI AMPS.  	1. Mineral build-up on evaporator/ auger causing ice to jam auger. 2. Damaged shuttle mechanism. 3. Intermittent drive output from PC board. Evaporator will freeze causing a HI AMPS error. 4. Gearmotor is unplugged.	1. Clean ice machine. Increase flushing frequency. 2. Replace or repair shuttle mechanism. 3. Replace PC board. 4. Plug in gearmotor.
4. Ice machine is not making ice. Drain clog.  	1. Drain hose kinked or plugged causing water to back up. 2. Improper floor drain routing/pitch causing water to back up. 3. High TDS levels and leaking drain solenoid may cause an errant drain clog. 4. No vent on external drain line.	1. Remove kink or blockage from drain hose. 2. Re-route floor drain. 3. Clean area around drain sensor and/or replace Drain solenoid valve. 4. Add vent to drain line.

Ice machine disposition	Possible causes	Corrective action
Legend: ● ON ○ OFF ◐ ON or OFF ⊠ FLASHING		
5. Ice machine is making ice. Excessive water in bin or coming into bin from transport tube. 	1. Failed water sensors. Processor assumes there is no water when there is water. 2. Blocked reservoir vent. 3. Defective water feed solenoid valve. Stuck in open position.	1. Clean or replace water probe assembly. Check wiring connections. 2. Clean or replace vent tubes. 3. Replace water feed solenoid valve.
6. Ice machine is not making ice. Lo water. 	1. Water supply is insufficient. 2. Low water pressure. 3. Defective water feed solenoid valve. Stuck in closed position. 4. No water feed output from PC board.	1. Restore water supply and check water filters. If evaporator was completely empty the reset button may have to be pressed to restart the ice machine. 2. Ice machine will eventually start when water reaches normal lo level. 3. Replace water feed solenoid valve. 4. Replace PC board.
7. Service required. 	1. 30,000 hour bushing check.	1. Call Follett technical service group at (877) 612-5086 or +1 (610) 252-7301.

ATTENTION!

To prevent circuit breaker overload, wait 15 minutes before restarting this unit. This allows the compressor to equalize and the evaporator to thaw.

Evaporator assembly

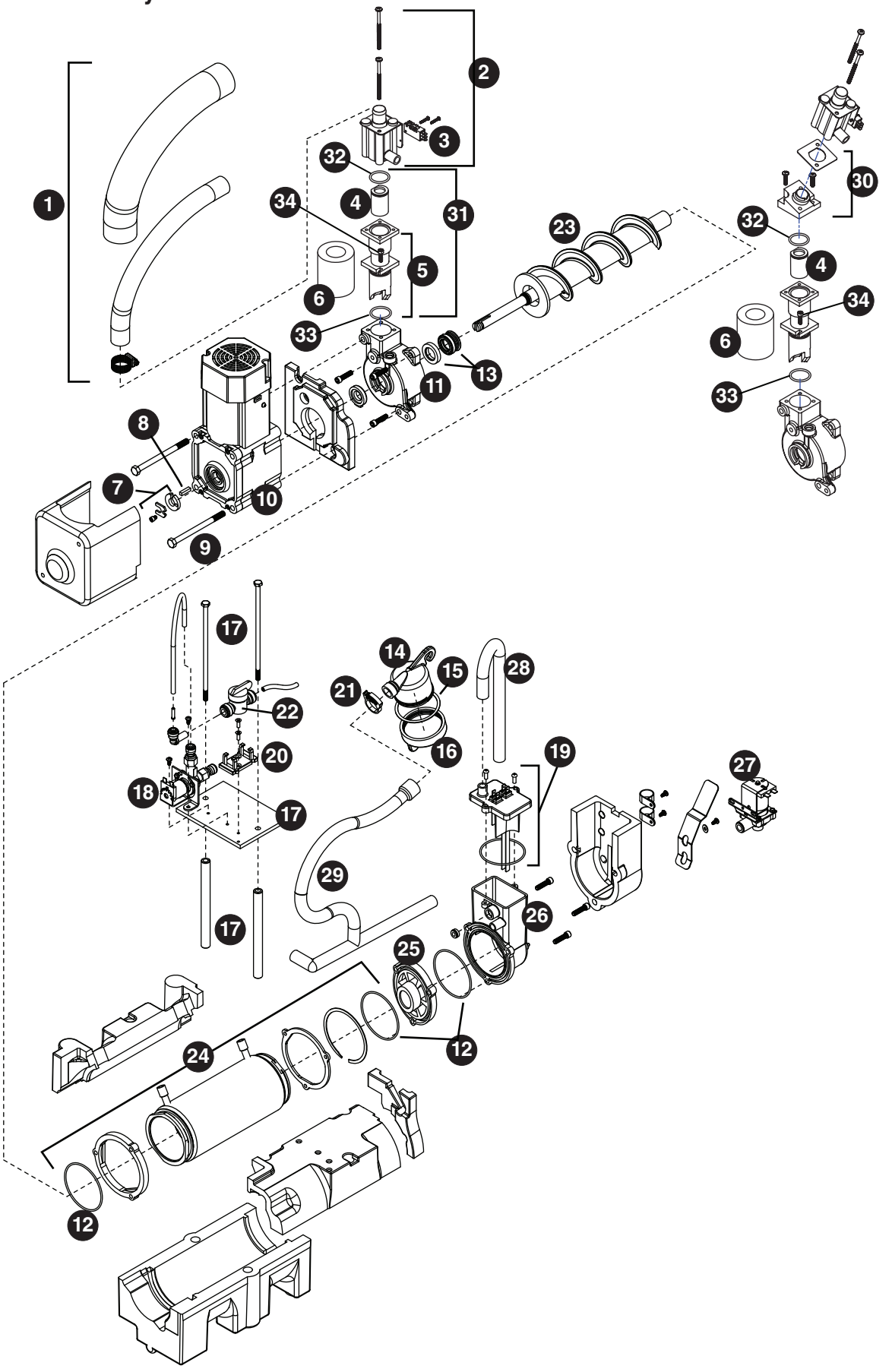

Reference #	Description	Part #
1	Tube, ice transport, molded	01006485
2	Shuttle assembly	01006253
3	Switch, shuttle	001006261
4	Compression nozzle	01048941
5	Chamber, expansion	01103589
6	Insulation (sold per foot)	204360
7	Auger hardware (includes screw, spacer, retainer) - S/N E03141 and after	01041474
7	Auger hardware (includes washer and 2 nuts) - before S/N E03141	01006493
8	Key	00974394
9	Bolt, gearmotor mounting (1)	00974352
10	Gearmotor, 115 V (includes capacitor)	01006212
11	Main housing	01006204
12	O ring	00974329
13	Seal, auger shaft	00969592
14	Cup, sanitizer	00130674
15	Gasket, sanitizer	00124032
16	Cap, sanitizer (includes gasket)	00130880
Not shown	Tubing, water, 3/8" OD	502719
Not shown	Tubing, water, 1/4" OD	502079
17	Retainer kit, evaporator	01006535
18	Solenoid, water feed (115 V)	00128116
19	Reservoir lid and sensors	01006295
20	Clip, water shut-off valve	502922
21	Clamp, cleaning cup	00983544
22	Valve, shut-off, water	502921
23	Auger (includes seal, key, and auger hardware)	01006196
24	Evaporator (includes (2) o-rings)	01006188
25	Rear bushing housing and bushing (includes (1) o-ring)	01006279
26	Reservoir assembly, water (includes lid and insulation)	01006287
27	Solenoid, purge (115 V)	00974279
28	Tube, vent	00991786
29	Tube, sanitizer	00991778
Not shown	Insulation kit, evaporator/gear motor/reservoir	00974600
30	Kit, MicroChewblet	00997585
31	Extended expansion chamber assembly	01103357
32	O-ring, top	01053180
33	O-ring, bottom	00974337
34	Allen screw, 5x32 (each)	0105004

Low side assembly

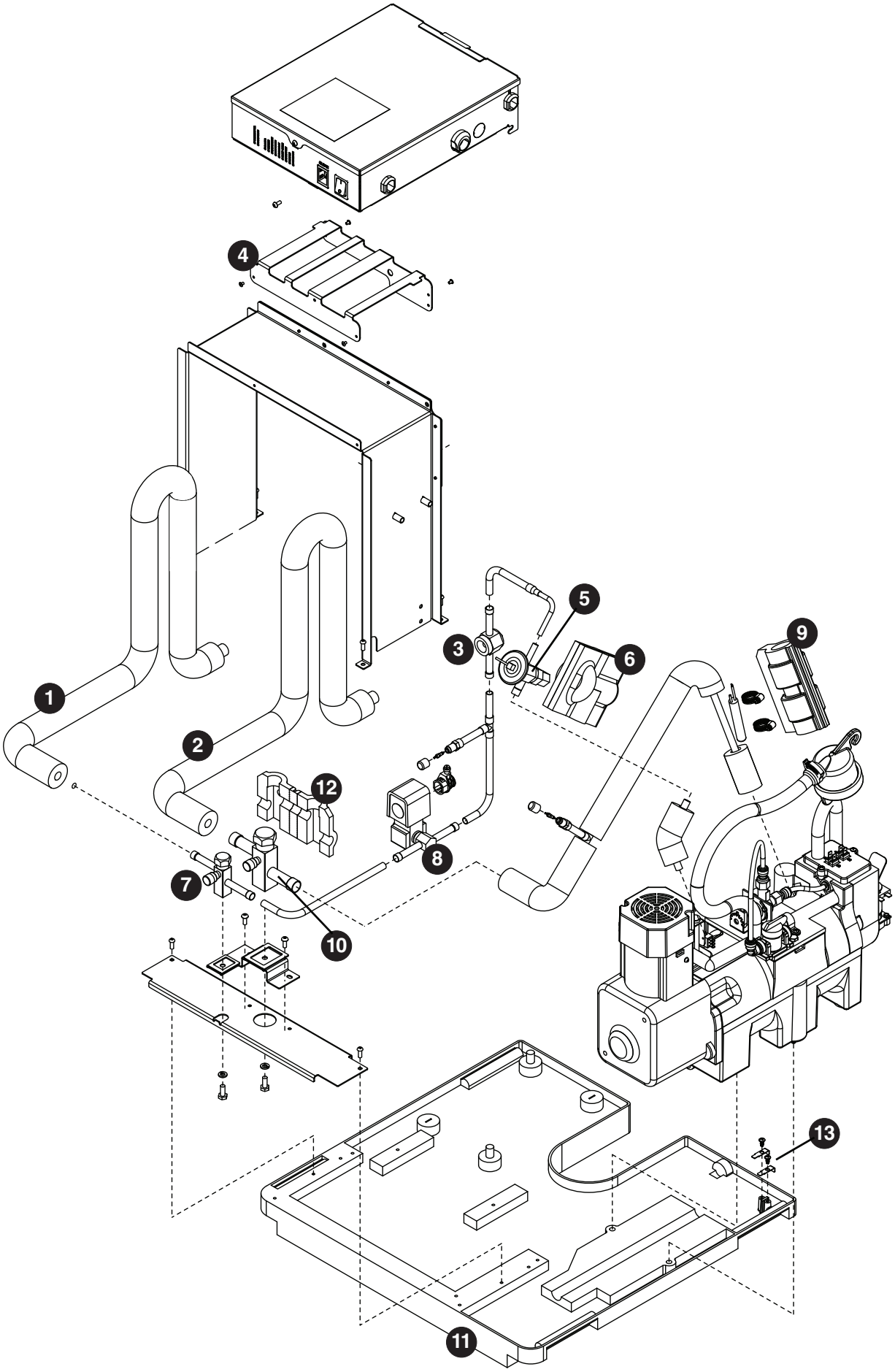

Reference #	Description	Part #
1	Tubing, liquid line (includes insulation)	01021724
2	Tubing, suction line (includes insulation)	01021732
3	Sight glass	01018357
4	Electrical box support	00969925
5	Valve, expansion, thermal (includes 502830 and 00106534)	01021716
6	Insulation, TXV	502830
7	Valve, shut-off, liquid line	00107060
8	Valve, solenoid	00107052
9	Insulation, bulb, TXV	00106534
10	Valve, shut-off, suction line	00107078
11	Base, split system	01006303
12	Insulation, service valve	00168914
Not shown	Cap, valve, shut-off, suction line	00991026
13	Sensors, chassis	01006378

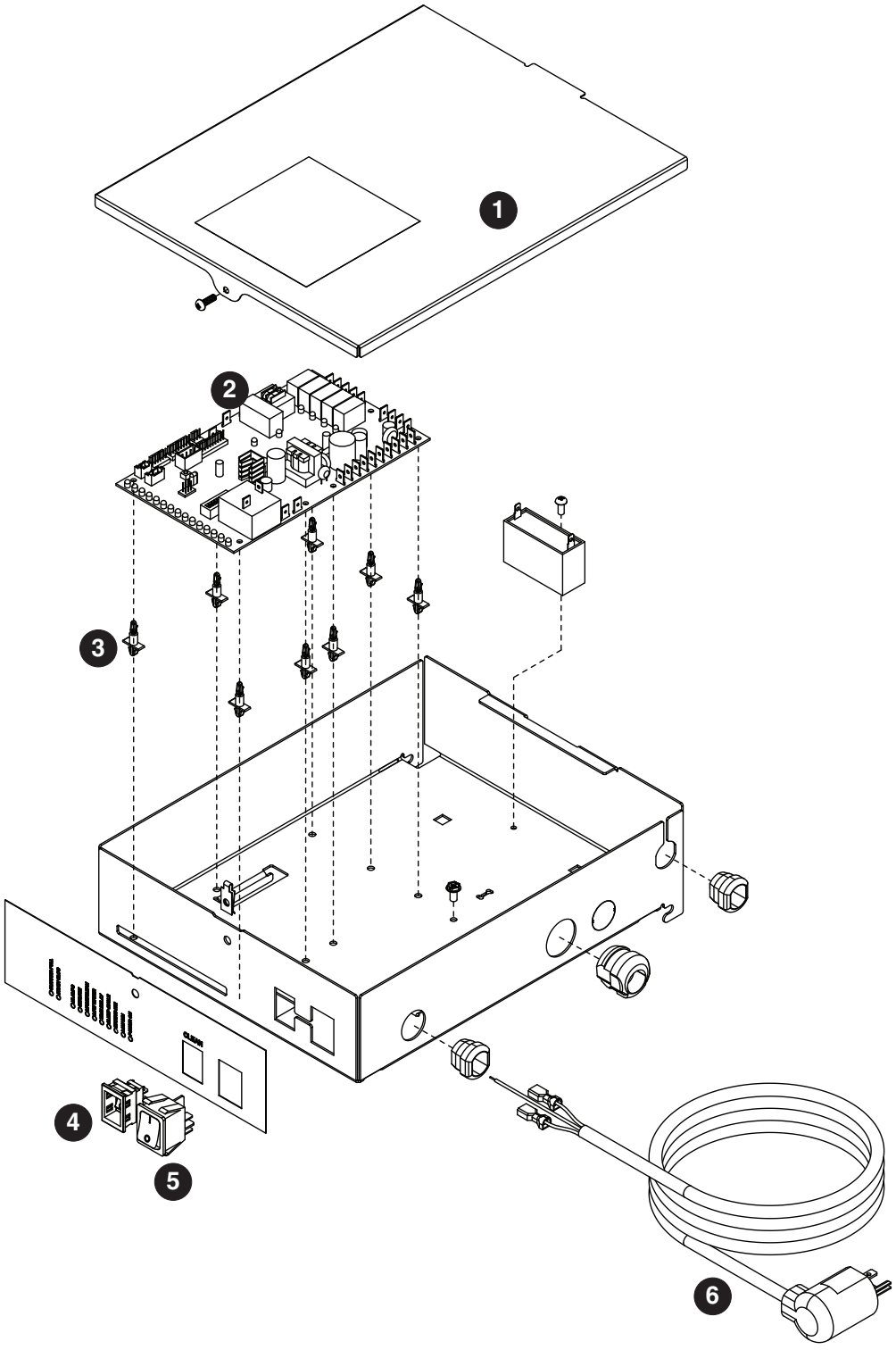
1
2
3
4
5
6

Reference #	Description	Part #
1	Cover, electrical box, air/water-cooled	01021708
2	Board, control, 115 V (includes stand-offs)	01006428
3	Stand-offs (set of 8)	00130906
4	Switch, evaporator clean	00117036
5	Switch, ice machine power	208867
6	Cord, power, 115 V	00984278

Top mount configuration

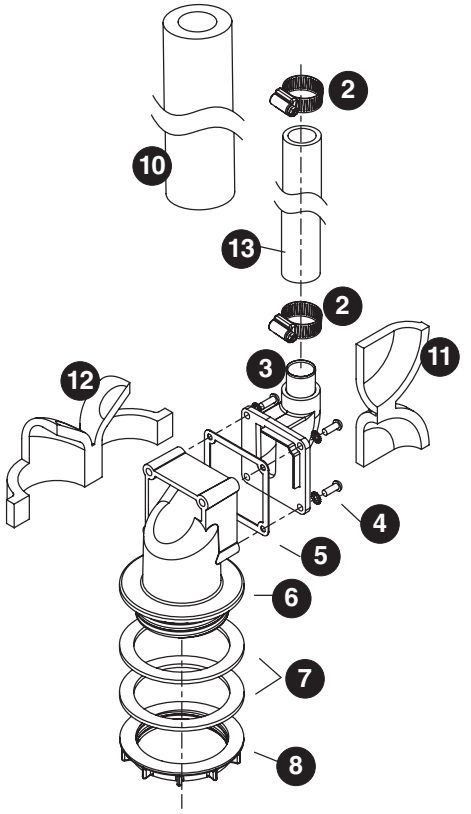

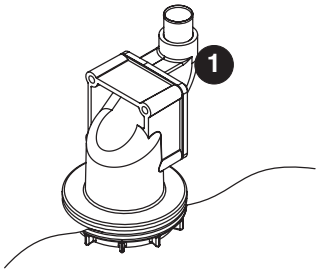

RIDE model configuration

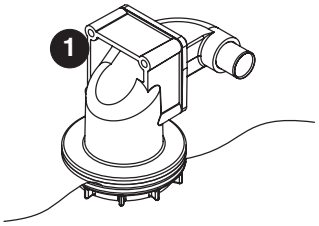

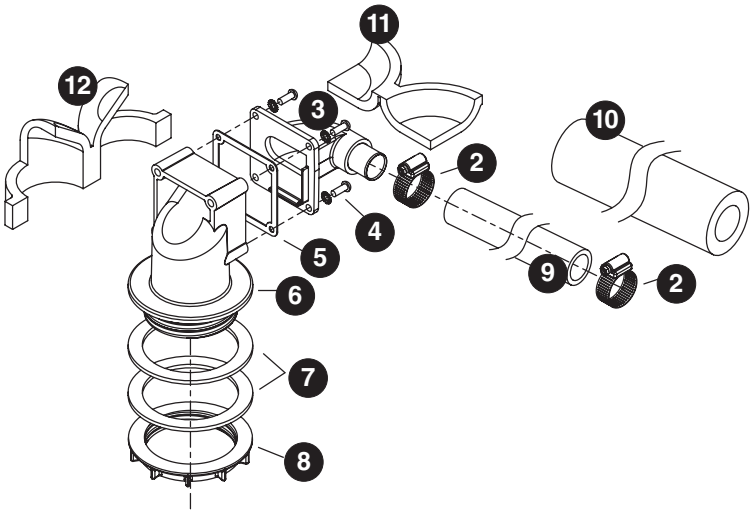

Reference #	Description	Part #
1	Shuttle actuator	00171322
2	Clamp	500377
3	Actuator elbow (includes 00167122 and 209100)	00171264
4	Screws	209100
5	Gasket	00167122
6	Actuator body	00171272
7	Gasket, coupling	00126532
8	Ring, locking (includes 00126532)	00171371
9	Ice transport tube, 10' (3m)	00171280
9	Ice transport tube, 20' (6m)	00171298
10	Insulation, transport tube	501176
Not shown	Insulated polywire ice transport tube, per foot	00174896
11	Insulation, elbow	00168922
12	Insulation, actuator	00168930
13	Ice transport tube, top mount, 30" (762mm)	00171306
Not shown	Integration kit, top mount	00171389
Not shown	Integration kit, RIDE model (includes 10' (3m) of tube and insulation)	00171397
Not shown	Extension-fill tube, 9"	00135723
Not shown	Extension-fill tube, 4"	00153684
Not shown	Diverter plate (single agitator Cornelius dispensers and left-hand dispense chute on dual-agitator Cornelius dispensers)	307277
Not shown	Diverter plate (right-hand dispense chute on dual-agitator dispensers)	00996207
Not shown	Follett SafeCLEAN ice machine cleaner (case of 24 x 7oz packets)	00132001
Not shown	Sani-Sponge kit	00132068
Not shown	Integration kit, Vision	00997171
Not shown	High-capacity filter system	00978957
Not shown	Primary filter (1)	00978965
Not shown	Primary filter (6)	00978973
Not shown	Pre-filter (1)	00130211
Not shown	Pre-filter (12)	00954305
Not shown	IMS-II or IMS-III sanitizer concentrate - 16 oz.	00979674

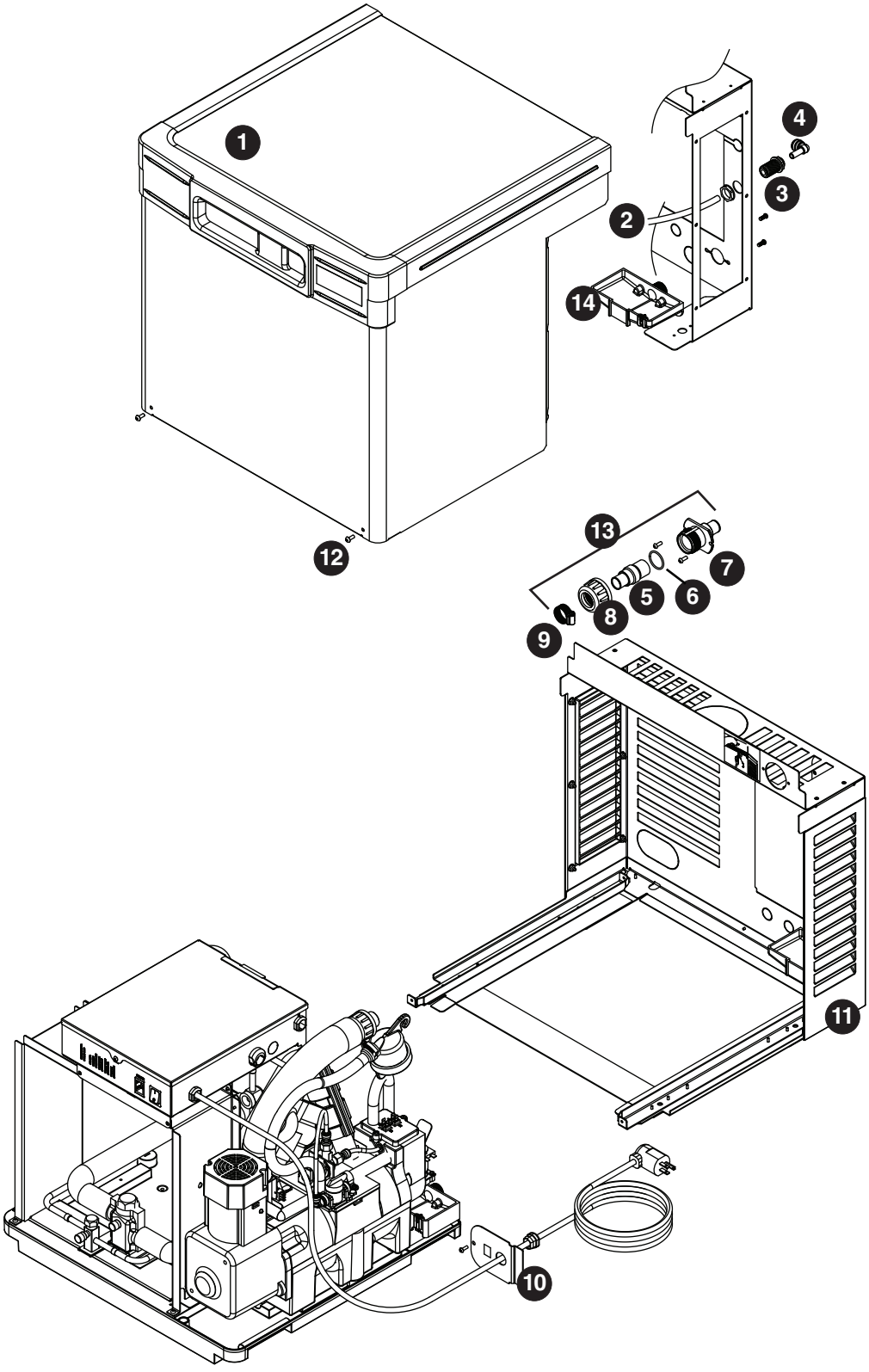
1
2
3
4
5
6
7
8
9
10
11
12
13
14

Reference #	Description	Part #
1	Front cover (solid front)	01091784
1	Front cover (with cutout for grille)	01006162
2	Tubing, water, 3/8" OD	502719
3	Fitting, water inlet	502924
4	Elbow, water inlet	502925
5	Coupling (includes O-ring)	00171207
6	O-ring	00144675
7	Bulkhead fitting	00171215
8	Nut	00145342
9	Hose clamp	500377
10	Plate, strain relief	00192070
11	Louvered docking assembly (includes water tubing, water inlet fitting, water inlet elbow, strain relief plate, bulkhead connector kit, and drain pan)	01006170
12	Screw	203460
13	Bulkhead connector kit	00171223
Not shown	Gasket, front cover (inside), per foot (4 feet required)	00939058
Not shown	Louver, intake/exhaust (13.75"x17.75"), per foot (6 feet required)	00978304
Not shown	Gasket, air intake (front cover, outside)	00131532
14	Pan, drain	01006543
Not shown	Grille, front	01006154

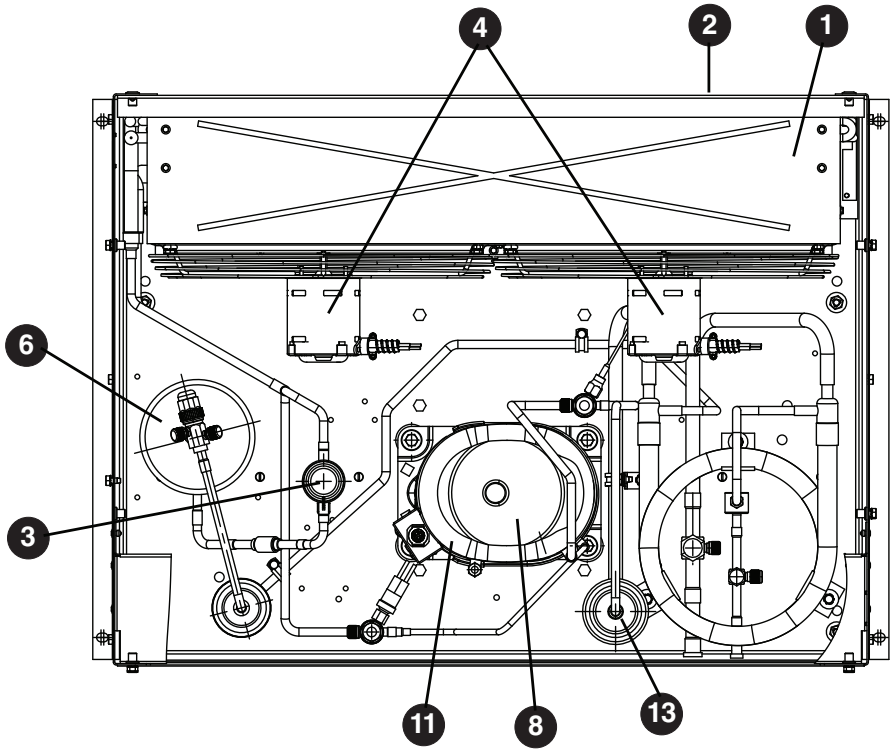
4
2
1
6
3
11
8
13

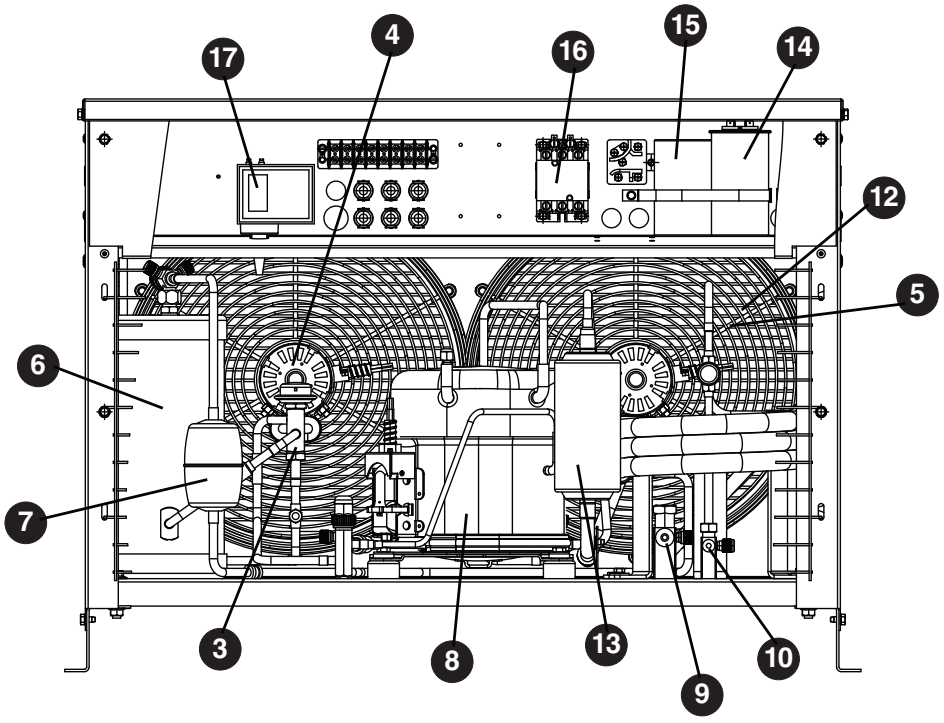
17
4
16
15
14
12
5
6
7
3
8
13
10
9

Reference #	Description	Part #
1	Shroud	01018290
2	Condenser	01018324
3	Head pressure control valve	01021401
4	Condenser fan motor	01018266
5	Condenser fan guard	00123067
6	Receiver	01018332
7	Filter drier, liquid	01018340
8	Compressor	01021666
9	Service/shut-off valve, suction line	00107078
10	Service/shut-off valve, liquid line	00107060
11	Crankcase heater	01018373
Not shown	Sight glass	01018357
12	Condenser fan blade	00173088
13	Filter drier, suction	00998245
Not shown	Starting relay	01018225
14	Run capacitor	502837
15	Starting capacitor	01018241
16	Contactor	00155952
17	Low pressure control	01018316
Not shown	High pressure switch	01018308
Not shown	Fan cycling switch	01021393
Not shown	Overload	01018217
Not shown	Schrader valve	01021419
Not shown	Suction valve, upstream suction filter	01021427
Not shown	Suction valve, upstream compressor	01021435

Harmony, Ice Manager, SafeCLEAN, Sani-Sponge and Vision are trademarks of Follett Corporation
Follett, Chewblet, and RIDE are registered trademarks of Follett Corporation, registered in the US.

Innovative solutions, inspired by ice

801 Church Lane • Easton, PA 18040, USA
Toll free (877) 612-50861 • +1 (610) 252-7301
www.follettice.com

01012715R07
© Follett Corporation 12/15