FOSTER

The Refrigeration Experts

User Manual

ECOPRO G3

Cabinets

EP700H, EP700M, EP700L, EP700G, EP700F, EP700P, EP700SH, EP700SL, EP1440H, EP1440M, EP1440L, EP1440G, EP700HH, EP700HL, EP700LL, EP700H2, EP700L2, EP700LW, EP700L2MD, EP820HU, EP820MW, EP1440LG, EP1440HSTB.





Four Steps

to extend the life of your appliance

1. **Getting to know your new Foster appliance**



2. **Installation**



3. **Using the appliance**



4. **Maintenance**

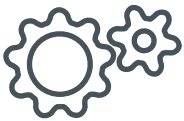

1 Getting to know your new Foster appliance

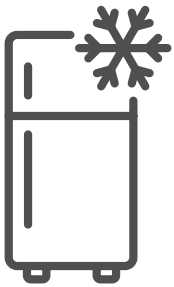

These instructions should be retained and made readily accessible by personnel using the appliance. The instructions should be read thoroughly prior to appliance installation. Failing to follow the advice contained in this manual may result in damage to the appliance and personal injury to the operator.

All installations **must** conform to local and municipal regulations and directives. In case of doubt contact your Foster authorised distributor or the Foster Technical Department. The information contained in this manual is current at the time of publication and is subject to change without notice.

CAREFUL – DANGER
Ignoring this sign and remarks may result in personal danger.

CAREFUL – DANGER
Ignoring this sign and remarks may result in damage to your appliance.

INFORMATION
Useful hints to make the best use of your appliance.

Climate Class

Climate class indicated on the serial plate shows the ambient temperature & humidity at which this appliance has been tested, for the purposes of establishing values in line with European standards.

Climate Class	Temperature	Relative humidity
4	30˚C	55%
5	40˚C	40%

Electrical Safety ⚠

This equipment shall be connected to an electrical supply protected by a Residual Current Device (RCD). This may include a residual current circuit breaker (RCCB) type socket, or through a Residual Current Circuit Breaker with overload protection (RCBO) supplied circuit.

Should it be necessary to replace the fuse, the replacement fuse must be of the value stated on the serial label for the appliance.

General Safety ⚠

- Do not store explosive substances such as aerosol cans with a flammable propellant in this appliance.
- Keep all ventilation openings in the appliance or in the structure of a built in unit clear of any obstructions.
- Do not use electrical appliances inside the storage compartment.
- Do not use steam cleaners, pressure washers or other jets/sprays of water on or around the appliance.
- The appliance is air tight when the door is closed therefore under no circumstances should any living body be stored or 'locked in' the appliance.
- This appliance is heavy. When moving the appliance care should be taken and correct safe practices followed. The appliance should not be moved over uneven surfaces.
- The emitted sound level of this appliance is not greater than 70dB(A).
- To ensure stability the appliance should be located on a flat, level surface, correctly loaded.
- Do not use mechanical devices to accelerate the defrost process.
- Care should be taken not to damage the refrigeration circuit and/or system.
- If the supply cord is damaged, it must be replaced by the manufacturer, it's service agent or similarly qualified persons in order to avoid hazards.
- Care should be taken to avoid prolonged contact with cold surfaces with unprotected body parts, correct PPE to be used at all time.

Disposal Requirements

This appliance contains components and materials which can be harmful to the environment if not disposed of correctly. Disposal of this appliance should be carried out by a suitably licensed waste contractor in accordance with national laws and regulations which may be in force at the time.



2 Installation

Removal of packaging

Prior to carrying out this operation please ensure that these instructions have been read, understood and that the necessary personnel and tools are available to ensure that these instructions are complied with. It is also recommended that a full assessment of the installation conditions and requirements be conducted prior to commencing this operation.

Tools required: A sharp retractable knife or scissors
Pliers or cutters suitable to cut hard plastic

⚠ Single door appliances weigh up to 150kg when empty and requires at least 2 people to carry out these instructions.

⚠ Double door appliances weight up to 230kg when empty and requires at least 4 people to carry out these instructions.

⚠ Never lift more weight than you are comfortable with. Any lifting should be carried out using correct lifting techniques.

⚠ Never stand directly in line or under the appliance when it is leaning at an angle while carrying out these instructions.

⚠ The appliances are top heavy and care should be taken when manoeuvring uneven or sloping surfaces. Do not manoeuvre the appliance without assistance.

⚠ It is recommended that gloves are worn when carrying out these instructions.

Single Door Cabinet

1 Remove outer plastic and cardboard. Take care not to damage the appliance with any sharp objects used to remove the packaging.

2 Position the pallet against a flat surface of a similar height to the pallet.

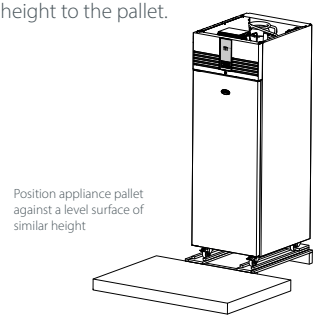

Double Door Cabinet

1 Remove outer plastic and cardboard. Take care not to damage the appliance with any sharp objects used to remove the packaging.

2 Position the pallet against a flat surface of a similar height to the pallet.

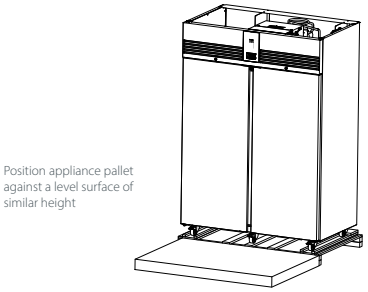

3 Ensure that the castors and appliance door are locked.

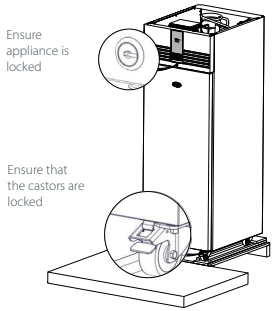

4 Support the appliance on the front/top of the door and rear as the appliance is top heavy, cut the support straps on both sides and unlock the castors.

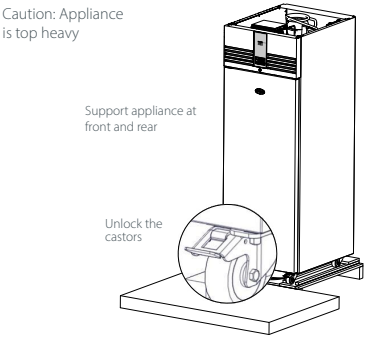

5 Carefully slide the appliance off the pallet onto the adjacent level surface.

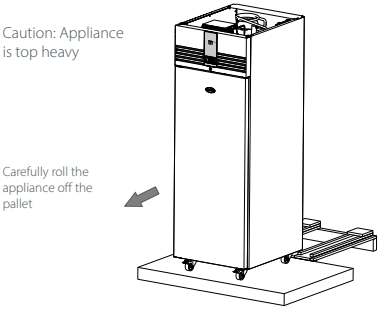

6 If the appliance is not being moved straight to it's final location lock the castors once more.

7 Ensure that all packaging is disposed of in an appropriate way in accordance with any local regulations for waste disposal.

3 Ensure that the castors and appliance door are locked.

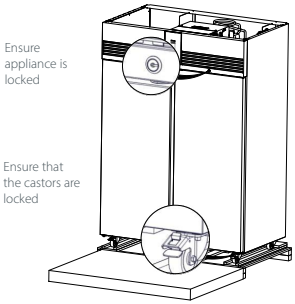

4 Support the appliance on the front/top of the door and rear as the appliance is top heavy, cut the support straps on both sides and unlock the castors.

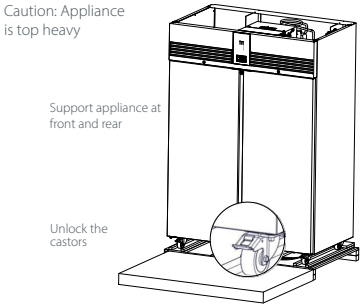

5 Carefully slide the appliance off the pallet onto the adjacent level surface.

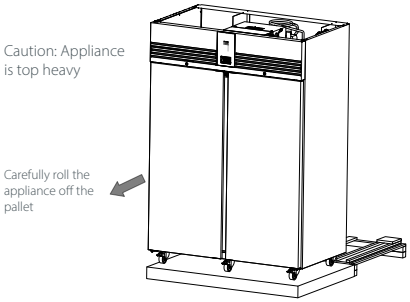

6 If the appliance is not being moved straight to it's final location lock the castors once more.

7 Ensure that all packaging is disposed of in an appropriate way in accordance with any local regulations for waste disposal.

Start-Up and Test Sequence

After unpacking, clean (cleaning directions supplied within this manual) and allow the appliance to stand for 60 minutes before turning on.

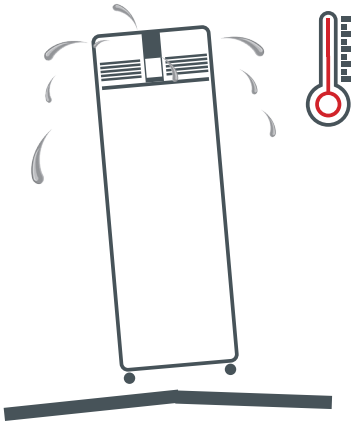

Ensure the appliance is situated on a firm, level surface, away from both hot and cold air sources, as this will affect its performance.

Place the appliance in a location so as not to exceed the maximum rated ambient temperature.

The appliance produces warm air when operating normally and requires adequate ventilation. The dimensions indicated are a minimum.

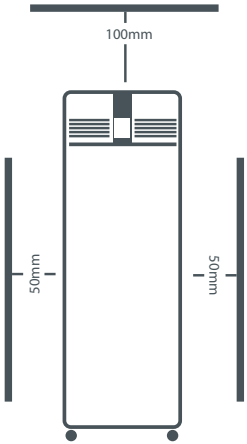

Connect the appliance to a suitable power supply. Do not connect or disconnect the appliance with wet hands. The appliance will turn on automatically displaying the actual internal temperature of the appliance. If this does not happen and button 3 is 'pulsing' press and hold button 3 for 3 seconds to turn on the appliance.

As the operating temperature has been pre-set no adjustments are required. Allow the appliance to reach its normal operating temperature before loading with product.

3 Using the appliance

Display Icons and Buttons

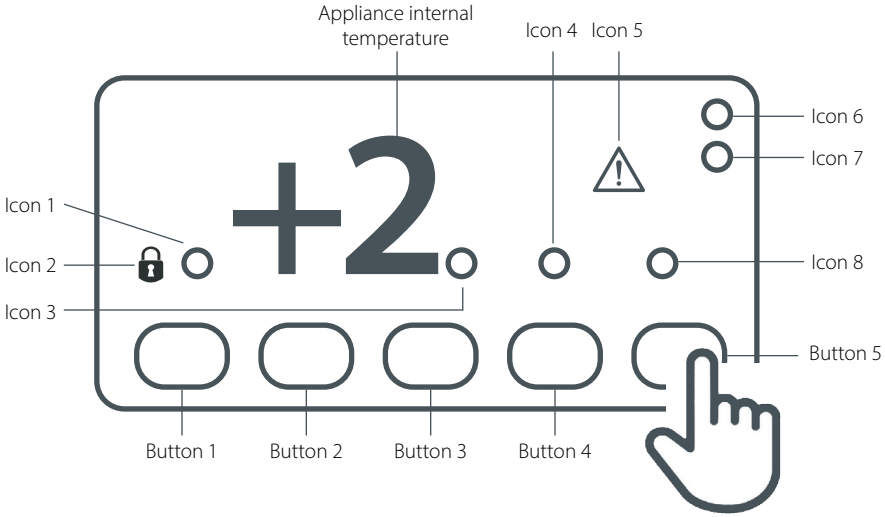

Icon		Button	
1	Compressor running	1	Information menu
2	Keypad locked	2	Increase value
3	Evaporator fans running	3	Standby/Exit/Confirm
4	Defrost in progress	4	Decrease value
5	Alarm	5	Light (If fitted)
6/7	Display units Centigrade or Fahrenheit		
8	Auxillary output operation		

Note - Buttons 1, 2, 4 and 5 are only visible after pressing button 3

Standby

Pressing button 3 for 3 seconds will turn the unit on or into standby. When in standby, only button 3 will be displayed. The remainder of the display will be blank. When operating normally, the display will show the internal temperature and button 3.

Set Point

To display the appliance Set Point, with the display showing the temperature, press button 3. Then press button 1 and with the display showing 'SP' press button 3.

To amend the Set Point press button 3. Then press button 1 and with the display showing 'SP' press button 3. Adjust using button 2 and button 4. Press button 3 to save the new value. If button 3 is not pressed the new value will not be stored.

If the Set Point cannot be adjusted to the value required please contact your authorised Foster dealer for advice.

The display will resume normal operation after 30 seconds or if button 3 is pressed.

Keypad Security Settings

We advise that this function is used to prevent unauthorised adjustment of the appliance and it's operating temperature.

Press and release button 3. Then press button 1 followed by button 4 to display 'Loc'. Press button 3 and use buttons 2 and 4 to change the value to 'Yes' to lock the keypad or 'no' to unlock it. Press button 3 to save the new value. If button 3 is not pressed the new value will not be stored.

The display will resume normal operation after 30 seconds or if button 3 is pressed.

Defrost



The appliance has an automatic defrost function and will defrost periodically each day without any user intervention. This process is normal and does not affect product stored in the appliance. During defrost the appliance can be used as normal.

To start a defrost manually press and hold button 3 for 5 seconds. This will turn off the appliance. When this happens do not release the button and after 2 more seconds the display will indicate a defrost has commenced (icon 4 illuminated) and the button can be released.

Shelves, Supports, Loading and Air Flow



The appliance is supplied with adjustable, removable trayslides and shelves.

Each shelf is capable of holding up to 40kg of product evenly distributed.

Do not block air vents with product. A minimum of 25mm should be maintained between the top of the product and the shelf above.



Do not place product on the base of the appliance. If it is required to store product on the base of the appliance please contact the Foster parts team to purchase the necessary shelf and spacers.

Always ensure air can circulate around/through the stored product. It is important that for optimum energy and temperature performance that adequate airflow is maintained around the perimeter of the shelves, and around all stored products.

Door Lock

To lock the door insert the key and turn 90°, turn in the opposite direction to unlock.

Internal Light (Applicable to model EP700G and EP1440G)

The light is operated using button 5. Press once to turn on the light and press again to turn off the light.

4 Maintenance

Cleaning and Maintenance

IMPORTANT: This appliance is heavy. When moving the appliance care should be taken and correct safe practices followed. Prior to cleaning ensure that the correct PPE is available and utilised and that the appliance is switched off and disconnected from the power supply. Do not disconnect or connect the appliance from the power supply with wet hands. Following cleaning, only when the appliance is dry should the appliance be reconnected to the power supply and switched on.

Cleaning should be carried out periodically as required depending on application.

Switch off the appliance, disconnect from the power supply and remove all products, racking and shelves. Care should be taken with the racking and shelves being inspected for any signs of damage resulting in sharp edges and ensure that body parts do not come into contact with cold surfaces.

When cleaning a freezer it is recommended that the internal temperature is allowed to increase to above freezing prior to cleaning.

Wash all internal and external surfaces with a mild liquid detergent diluted as per the manufacturer's instructions. Rinse surfaces with clean water and dry thoroughly.

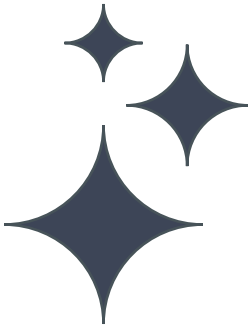

Never use wire wool, other abrasive substances, cleaning agents with a high acid or alkaline content (e.g. bleach acid or chlorine) or similar products as they can damage the appliance.

When the appliance has been cleaned and dried, refit the racking and shelves.

Re-connect the appliance to the power supply adhering to the previous guidelines above. Switch the appliance on and allow it to reach it's normal operating temperature before re-loading product.

Cleaning

Condenser Air Grill

Use a soft brush or vacuum to remove loose dust and dirt from the Condenser Air Grill.

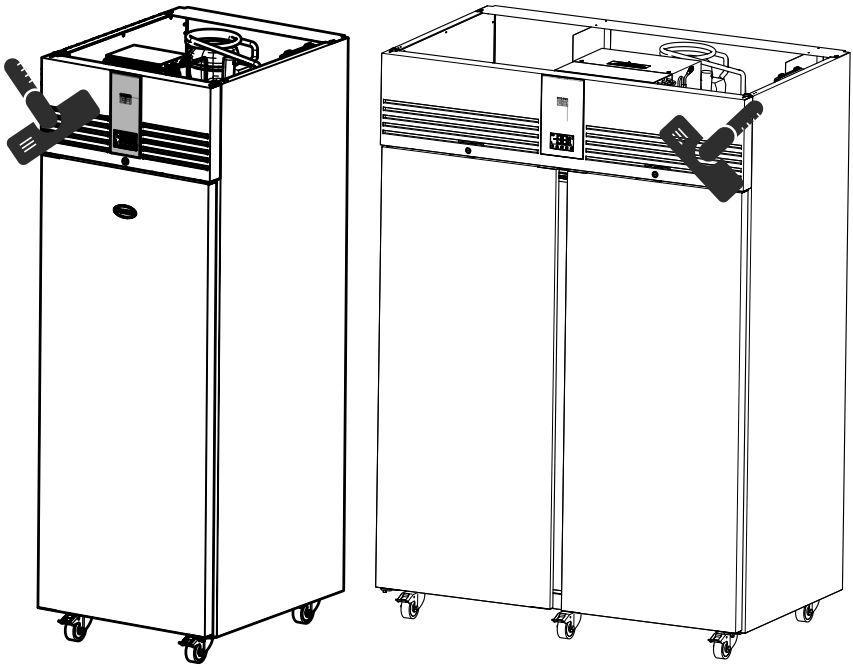

Condenser

Regular cleaning of the condenser (located behind the Condenser Air Grill) increases energy efficiency and prolongs the life of your appliance.

Never use a wire brush, abrasive or corrosive materials to clean the condenser. This should be carried out periodically, by a competent engineer as outlined in the Regular Maintenance section of this manual.

Gasket

All door gaskets should be inspected on a regular basis and replaced as necessary if damaged. To clean, wipe with a warm damp soapy cloth followed by a clean damp cloth. Finally dry thoroughly.

Shelves

The shelves in the appliance can be removed for cleaning. The shelves are dishwasher safe however the vertical supports should be cleaned with warm soapy water then rinsed and dried.

Regular Maintenance

Where the regular cleaning regime previously described does not remove dirt or grease deposits from the condenser, it should be cleaned by a competent engineer. We recommend that an engineer services the appliance every 6 to 12 months to maintain your warranty and ensure optimal performance of your appliance. We recommend that service is carried out by an authorised Foster agent or by contacting the Foster Service team using the contact details in this manual.



6-12 MONTHS

Troubleshooting

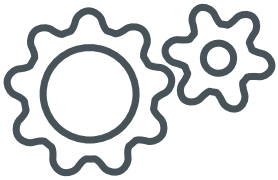

Alarms/Warnings:

During operation the current temperature inside the appliance will be displayed. At certain times this will change to indicate a particular appliance operation or fault. The indicators you may see are as follows:

hi - The internal temperature of the appliance is higher than it should be. Ensure that the door is closed and that the air flow inside is not obstructed by excesive or poor loading of product. The alarm will reset if the temperature falls to a normal level. If this does not happen please contact your authorised dealer or Foster Service.

Lo - The internal temperature of the appliance is lower than it should be. Check to ensure that the appliance has not been loaded with product at a lower temperature than the normal appliance operating temperature. If this is not the case please call your authorised dealer or Foster Service.

dO - The appliance door is open. Close the door to cancel the alarm.

tA - This indicates that the internal temperature probe has failed. Call your authorised dealer or Foster Service to arrange for this to be replaced. During this time the appliance cannot maintain an accurate temperature and all product should be removed and the appliance switched off.

tE - This indicates that the evaporator probe has failed. Call your authorised dealer of Foster Service to arrange for this to be replaced.

PF - The mains power has been removed from the appliance for a period of time and has now been restored. This may have resulted in a rise in appliance temperature. Caution should be taken when using products stored within to ascertain whether these products are suitable for use. Upon restoration of the power supply the appliance will resume normal operation and the PF can be cancelled by pressing button 3 once.

HC - The condenser temperature is higher than it should be. If the appliance is being subjected to particularly high ambient temperatures steps should be taken to reduce this. If the ambient temperature is not high or reducing the temperature does not rectify the fault please contact your authorised dealer or Foster Service.

Cnd - The condenser clean period has expired. Please contact your authorised dealer or Foster Service.

While in an alarm condition icon 5 will also be illuminated.

(Some indications are only visible periodically during specific appliance operations such as defrost or when activated through use of the appliance).

Before calling your supplier please make sure that:

Problem	Check	Solution
The appliance is not functioning	Is the appliance plugged in and the socket switched on?	If the appliance is plugged in check that the socket is 'live' by plugging another appliance in to see if that works.
	Has the fuse blown?	Check the fuse and if necessary change it for a new one
The appliance is not cooling or it is not reaching the required temperature	Is the appliance switched on?	Check that the temperature is displayed. If the display shows 'oFF' switch on the appliance as it is in standby
	Is the condenser blocked or dirty?	Inspect and clean the condenser if necessary as described in this manual
	Is the appliance positioned close to a heat source?	Is the heat source affecting the performance of the appliance. If possible move the appliance away from the heat source.
	Is the appliance loaded correctly?	Check the loading of the product contained in the appliance is in accordance with the guidelines in this manual
There is something other than the temperature displayed on the controller	Is the display showing one of the alarms/warnings above?	The display may show indications shown in the 'Alarms and Warnings' section of these instructions. For anything else contact your authorised dealer or Foster Service.

If the reason for the malfunction cannot be identified, disconnect the electrical supply from the appliance and contact your authorised dealer or Foster Service. When requesting a service call, please quote the model and serial number which can be found on the inside of the appliance on the right hand wall and begins with 'E'.

By Appointment to
Her Majesty Queen Elizabeth II
Suppliers of Commercial Refrigeration
Foster Refrigerator, King's Lynn

FOSTER
The Refrigeration Experts

For more information:
+44 (0) 1553 698485
regional@foster-gamko.com
fosterrefrigerator.com

For service and spares:
For service +44 (0) 1553 780333
service@foster-gamko.com
For parts +44 (0) 1553 780300
parts@foster-gamko.com

Document ID code: 00-570480 v5
Original Instructions