

CANDY Refrigerator Instruction Manual

CANDY Refrigerator Instruction Manual

Thank you for purchasing this product.
Before using your refrigerator, please carefully read this instruction manual in order to maximize its performance. Store all documentation for subsequent use or for other owners. This product is intended solely for household use or similar applications such as:
– the kitchen area for personnel in shops, offices, and other working environments
– on farms, by the clientele of hotels, motels, and other environments of a residential type
– at bed and breakfasts (B & B)
– for catering services and similar applications not for retail sale.
This appliance must be used only for purposes of the storage of food, any other use is considered dangerous and the manufacturer will not be responsible for any omissions. Also, it is recommended that you take note of the warranty conditions.

Contents [hide

1 SAFETY INFORMATION
2 Scrapping old appliance
3 INSTALLATION
4 OPERATION
5 TROUBLESHOOTING
6 File Downloads
7 Related Manuals

SAFETY INFORMATION

The refrigerator contains a refrigerant gas (R600a: isobutane) and insulating gas (cyclopentane), with high compatibility with the environment, that is, however, inflammable.
We recommend that you follow the following regulations so as to avoid situations dangerous to you:

- Before performing any operation, unplug the power cord from the power socket.
- The refrigeration system positioned behind and inside the refrigerator contains refrigerant. Therefore, avoid damaging the tubes.
- If in the refrigeration system a leak is noted, do not touch the wall outlet and do not use open flames. Open the window and let air into the room. Then call a service center to ask for repair.
- Do not scrape with a knife or sharp object to remove frost or ice that occurs. With these, the refrigerant circuit can be damaged, the spill from which can cause a fire or amage your eyes.
- Do not install the appliance in humid, oily or dusty places, nor expose it to direct sunlight and to water.
- Do not install the appliance near heaters or inflammable materials.
- Do not use extension cords or adapters.
- Do not excessively pull or fold the power cord or touch the plug with wet hands.
- Do not damage the plug and/or the power cord; this could cause electrical shocks or fires.

- It is recommended to keep the plug clean, any excessive dust residues on the plug can be the cause fire.
- Do not use mechanical devices or other equipment to hasten the defrosting process.
- Absolutely avoid the use of open flame or electrical equipment, such as heaters, steam cleaners, candles, oil lamps and the like in order to speed up the defrosting phase.
- Do not use or store inflammable sprays, such as spray paint, near the refrigerator. It could cause an explosion or fire.
- Do not use electrical appliances inside the food storage compartments unless they are of the type recommended by the manufacturer.
- Do not place or store inflammable and highly volatile materials such as ether, petrol, LPG, propane gas, aerosol spray cans, adhesives, pure alcohol, etc. These materials may cause an explosion.
- Do not store medicine or research materials in the refrigerator. When the material that requires strict control of storage temperatures is to be stored, it is possible that it will deteriorate or an uncontrolled reaction may occur that can cause risks.
- Maintain the ventilation openings in the appliance enclosure or in the built-in structure, free of obstruction.
- Do not place objects and/or containers filled with water on the top of the appliance.
- Do not perform repairs on this refrigerator. All interventions must be performed solely by qualified personnel.
- This appliance can be used by children aged 8 years and above and by persons with reduced physical, sensory or mental capabilities or with a lack of experience and knowledge, provided that they have been given adequate supervision or instruction concerning how to use the appliance in a safe way and understand the hazards involved.

Children should not play with the appliance. Cleaning and user maintenance should not be made by children without supervision.
Turning the knob fully counterclockwise, you will hear a click that corresponds to the switch-off of the product.
When the appliance is installed, the electrical cord and the current socket must be easily reached. The socket is compatible with the plug of the appliance. If not, request the replacement of the plug by an authorized technician; do not use extension cords and/or multiple connectors.
Do not touch the internal parts or frozen food with moist or wet hands as it can cause burns.

Scrapping old appliance

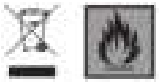

This appliance is marked according to the European directive 2012/19/EU on Waste Electrical and Electronic Equipment (WEEE). WEEE contains both polluting substances (which can cause negative consequences for the environment) and basic components (which can be re-used). It is important to have WEEE subjected to specific treatments, in order to remove and dispose properly all pollutants, and recover and recycle all materials.
Individuals can play an important role in ensuring that WEEE does not become an environmental issue; it is essential to follow some basic rules:
– WEEE should not be treated as household waste;
– WEEE should be handed over to the relevant collection points managed by the municipality or by registered companies. In many countries, for large WEEE, the home collection could be present.
In many countries, when you buy a new appliance, the old one may be returned to the retailer who has to collect it free of charge on a one-to-one basis, as long as the equipment is of equivalent type and has the same functions as the supplied equipment.

Conformity

By placing the CE mark on this product, we are confirming compliance to all relevant European safety, health, and environmental requirements that are applicable in legislation for this product.

INSTALLATION

WARNINGS:

- Do not install the appliance in a damp or wet location as this could compromise the insulation and result in leakage. Furthermore, on the exterior of the same, condensate could accumulate
- Do not place the appliance in locations outside or near sources of heat or exposed to direct sunlight.
  The appliance operates properly within the range of environmental temperatures indicated:
  +10 +32’C for the climatic class SN
  +16 +32’C for the climatic class N
  +16 +38’C for the climatic class ST
  +16 +43’C for the climatic class T
  (See the nameplate of the product)
- Do not place containers with liquids on top of the appliance.
- Wait at least 3 hours after final placement before placing the appliance in operation.

Electrical connection

After shipping, place the appliance vertically and wait at least 2 – 3 hours before connecting it to the electrical system. Before inserting the plug into the electrical socket, make sure that:

- The socket is earthed and in compliance with the law.
- The socket can withstand the maximum power load of the appliance, as indicated on the nameplate of the refrigerator.
- The power supply voltage is within the amounts indicated on the nameplate of the refrigerator.
- The cord must not be folded or compressed.
- The cord must be checked regularly and replaced solely by authorized technicians.
- The manufacturer declines any liability whenever these safety measures are not respected.

Appliance start-up

Remove all wrapping/packaging present inside the appliance and clean with water and baking soda or neutral soap.
After the installation, wait 2 – 3 hours to allow time for the refrigerator/ freezer to stabilize at normal working temperature, before placing fresh or frozen foods inside.
If the power cord becomes disconnected, wait at least five minutes before restarting the refrigerator/ freezer. At this point, the appliance is ready for use.

OPERATION

Temperature adjustment (no display)



Fig. 1

- The temperature adjustment of both compartments is affected by rotating the thermostat knob (Fig. 1).
  Select the desired position:
- For colder temperatures in the freezer, by turning towards 5.
- For temperature less cold in the refrigerator and in the freezer, by rotating in the direction of OFF.

ENERGY SAVINGS
For better energy savings, we suggest:

- Installing the appliance away from heat sources and not exposed to direct sunlight and in a well-ventilated room.
- Avoid putting hot food into the refrigerator to avoid increasing the internal temperature and therefore causing continuous functioning of the compressor.
- Do not excessively stuff foods so as to ensure proper air circulation.
- Defrost the appliance in case there is ice (see DEFROSTING) to facilitate the transfer of cold.
- In case of the absence of electrical energy, it is advisable to keep the refrigerator door closed.
- Open or keep the doors of the appliance open as little as possible
- Avoid adjusting the thermostat to temperatures too cold.
- Remove dust present on the rear of the appliance (see CLEANING).

AVOIDING NOISES
During its operation, the refrigerator emits some absolutely normal noises, such as:

- HUMMING, the compressor is running.
- RUMBLINGS, RUSTLINGS, and HISSING, the refrigerant is flowing through the tubes.
- TICKS and CLICKS, the operation shutdown of the compressor. Small measures to reduce the vibration noises:
- Containers touch each other: Avoid contact between containers and glass recipients.
- Drawers, shelves, bins vibrate: Check the proper installation of internal accessories.

NOTE:
The refrigerant gas produces noise even when the compressor is off; it is not a defect, it is normal.
If you hear a clicking sound inside the appliance, it is normal as due to the expansion of the various materials.

MAINTENANCE AND CLEANING
Cleaning
NOTICE:

- Before each operation, remove the refrigerator plug from the power socket to prevent electric shocks.
- Do not pour water directly on the outside or inside of the refrigerator itself. This could lead to oxidation and damaging of the electrical insulation.

DEFROSTING AND FREEZING
The rating pate states the maximum quantity of foods that can be frozen. (see Figure 2).

(Figure 2)

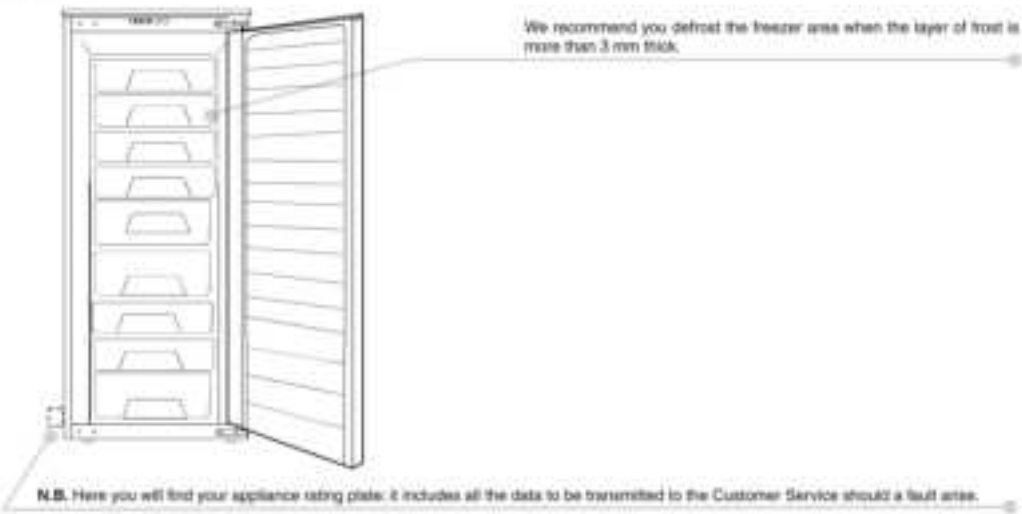

Freezer zone

Use the table below for the compartments 

The freezing process can only occur in the compartments 

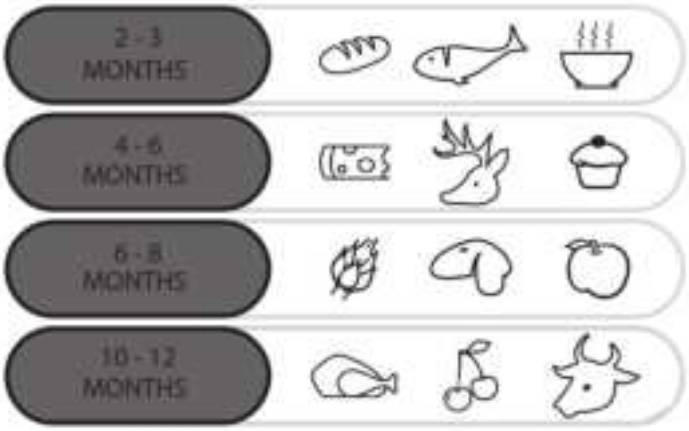

Practical recommendations
Place food on the shelves in a homogeneous manner to allow air to circulate properly and to cool it.

- Avoid contact between the food and the far-end walls of the refrigerator compartment.
- Do not introduce hot foods as they can cause deterioration of existing ones and increase energy consumption.
- Do not put in dishes or other containers unless previously washed.
- Do not obstruct the cold air ventilator openings with food.
- Do not store bottles in the freezer compartment as they can burst when frozen.
- In the case of a prolonged power outage, keep the doors closed so that foods remain cold as long as possible.
- The installation of the appliance in a hot and humid location, with frequent door openings and storing large amounts of vegetables, can cause the formation of condensate and affect the performance of the unit itself.
- To prevent excessive energy consumption, the frequent or prolonged opening of the doors is not recommended.

FREEZING

- Foods must be fresh.
- Freeze small amounts of food at a time in order to freeze quickly. Never exceed the maximum amount indicated on the rating label.
- During freezing, do not open the freezer door.
- Food must be sealed, airtight.
- Separate food to be frozen by those already frozen.
- Label bags or containers to keep an inventory of frozen foods.
- Once defrosted, do not ever refreeze foods and consume them promptly.

Defrosting the freezer compartment (static products without NO-FROST technology)
When the layer of frost is present in the freezer compartment exceeds 3mm, it is recommended to proceed with the defrosting as it increases energy consumption.

1. Rotate the knob to the „0“ position (Fig .3)

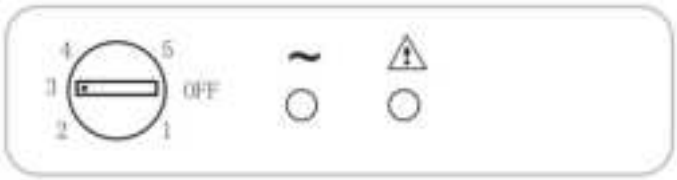

Fig. 3

2. Disconnect the power cord.
3. Remove the frozen food and temporarily place them in a cool place.
4. Leave the freezer door open to speed defrosting.
5. Collect the water on the bottom of the product.
6. Dry the freezer.
7. Reconnect the power cord and set the desired values.
8. Wait a moment and reintroduce the frozen foods.

WARNING:
Absolutely avoid the use of open flames or electrical appliances, such as heaters, steam cleaners, candles, oil lamps, and the like to accelerate the defrosting phase.
Do not scrape with a knife or sharp object to remove frost or ice present. These can damage the refrigerant circuit, the leakage of which can cause a fire or damage your eyes.

REVERSING THE OPENING OF THE DOORS

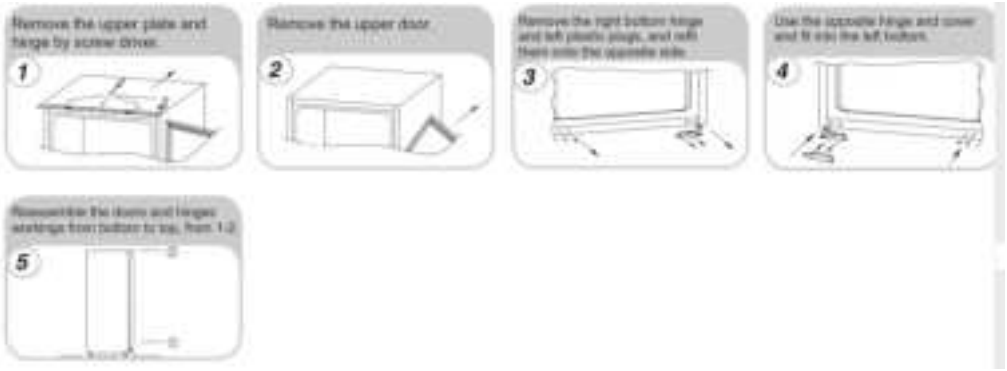

PRODUCT DIMENSIONS AND BUILT-IN COMPARTMENT



INSTALLATION OF THE APPLIANCE IN THE COLUMN

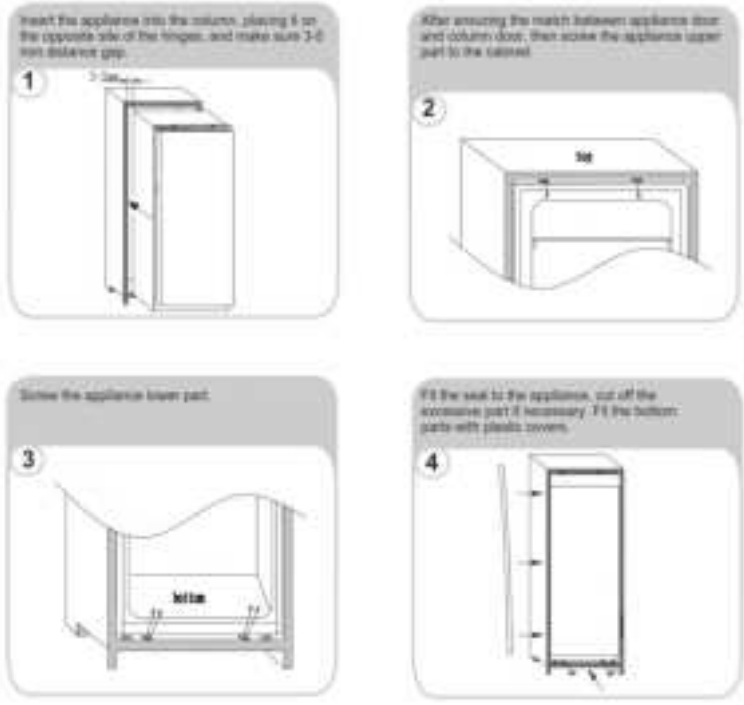

COUPLING OF THE PANELS OF THE BUILT-IN COLUMN OF THE APPLIANCE DOORS

The appliance is equipped with coupling devices for the appliance doors with the column panels (loader slide).

Secure the slide in the inner part of the panel of the built-in column at the desired height and at approx. 20 mm. From the outer wire of the door.

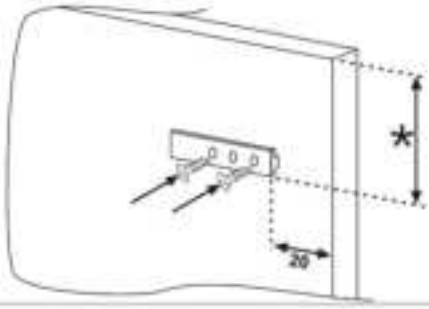

Open the doors of the built-in column and the fridge. Position the built-in loader in the slide, then fit it into the fridge door.

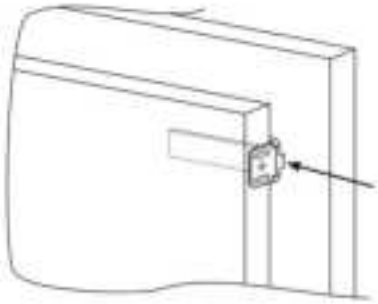

Mark the fixing points for the screws and drill with a bit of a diameter of 2.5mm.

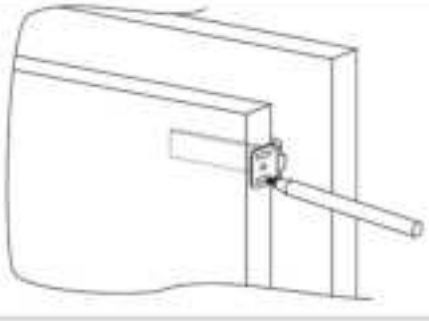

Connect the appliance door to the cabinet panel keeping the loader slots as guidelines.

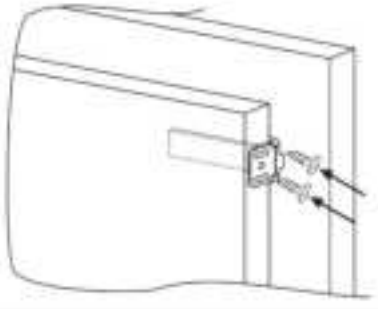

PRECAUTIONS FOR THE CORRECT OPERATION

Once the product has been embedded, place the rear part of the column in contact with the wall so as to prevent access to the compressor compartment. For the product to operate correctly it is essential to allow adequate air circulation so as to cool down the condenser located in the rear part of the appliance. For this reason, the column must be equipped with a rear chimney, whose upper opening must not be blocked, and with a front slot that will be covered with a ventilation grill.

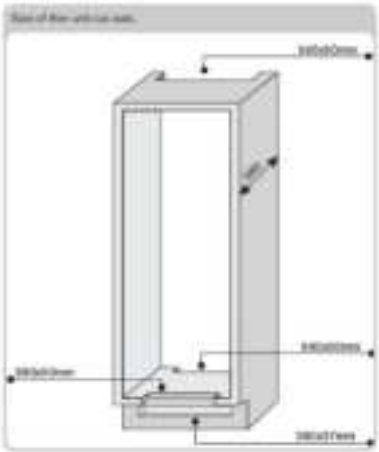



SUSPENDING USE OF THE APPLIANCE
If the appliance is not to be used for a long time:

1. Turn the appliance OFF (see Operation).
2. Extract the plug or remove the safety device.
3. Clean the appliance
4. Leave the doors of the appliance open.

TROUBLESHOOTING

PROBLEM	CAUSE	REMEDY
The refrigerator and freezer do not sufficiently cool.	• The doors are not closed. • The doors are frequently opened • Erroneous setting of the temperature. • The refrigerator and freezer have been excessively filled. • Surrounding temperature is too low. • No electrical power.	• Check that the door and gaskets close properly. • Avoid unnecessary opening of the doors for a period of time. • Check the temperature setting and, if it is possible, cool even more (see Temperature adjustment) • Wait for the stabilization of the temperature of the refrigerator or freezer. • Check that the ambient temperature is in accordance with what is indicated on the nameplate (see Installation). • The power cord is not properly plugged in. • Check whether the appliance is switched off (see Temperature adjustment) • Ensure that in the home there is current.
The motor runs continuously.	• The doors are not closed. • The doors are opened frequently. • Ambient temperature is very high. • Thickness of frost than 3mm.	• Make sure the doors are closed and if the seals close properly. • Avoid unnecessary open ports for a certain period. • Verify that the ambient temperature is in accordance with the specifications on the nameplate (see Installation). • Set the display/thermostat a warmer temperature. • Defrost the unit (see Defrosting). –
The frozen food is thawing.	• The ambient temperature range below the climate class of the product. The compressor starts rarely • The freezer door is not closed.	• Move the unit to a warmer or heat the room. • Make sure the door is closed and that the gasket is sealing properly.

IF YOU ARE NOT SOLVED THE PROBLEM, CONTACT THE SERVICE CENTER, PLEASE GIVE THE TYPE OF FAULT AND THE INFORMATION ON THE PLATE OF THIS APPARATUS TO INSIDE THE REFRIGERATOR COMPARTMENT:

- The model of equipment.
- The number of series.

File Downloads



CANDY Instruction Manual **Download** [optimized]
Refrigerator **Download**

Related Manuals

1. **CANDY Refrigerator User Manual** USER'S MANUAL Please read this instruction booklet carefully before using...
2. **CANDY Refrigerator User Manual** REFRIGERATOR BEFORE USING THE APPLIANCE Your new appliance is designed...
3. **CANDY Hobs Instruction Manual** CANDY Hobs Instruction Manual SAFETY INSTURUCTIONS We recommend you...
4. **CANDY Dishwasher Instruction Manual** Dishwasher Dishwasher Instruction Manual CDCP 8 CDCP 8S Read this...
5. **CANDY OVENS Instruction Manual** CANDY OVENS Instruction Manual General Warnings During cooking, moisture may...
6. **CANDY Oven Instruction Manual** CANDY Oven General Warnings During cooking, moisture may condense inside...