

Refrigerator

en Instruction for Use

K431..

NEFF

en Table of Contents

Safety and warning information 3
Information concerning disposal 5
Scope of delivery 6
Ambient temperature and ventilation 6
Installation location 7
Connecting the appliance 7
Getting to know your appliance 7
Switching the appliance on 8
Setting the temperature 8
Usable capacity 8
Refrigerator compartment 9
Interior fittings 9
Sticker “OK” 10
Switching off and disconnecting the appliance 10
Defrosting 10
Cleaning the appliance 11
Tips for saving energy 12
Operating noises 12
Eliminating minor faults yourself 13
Customer service 14

Safety and warning information

Before you switch ON the appliance

Please read the operating and installation instructions carefully! They contain important information on how to install, use and maintain the appliance.

The manufacturer is not liable if you fail to comply with the instructions and warnings. Retain all documents for subsequent use or for the next owner.

Technical safety

The appliance contains a small quantity of environmentally friendly but flammable refrigerant R600a. Ensure that the tubing of the refrigerant circuit is not damaged during transportation and installation. Leaking refrigerant may cause eye injuries or ignite.

If damage has occurred

- Keep naked flames and/or ignition sources away from the appliance,
- thoroughly ventilate the room for several minutes,
- switch off the appliance and pull out the mains plug,
- inform customer service.

The more refrigerant an appliance contains, the larger the room must be in which the appliance is situated. Leaking refrigerant can form a flammable gas-air mixture in rooms which are too small. The room must be at least 1 m^3 per 8 g of refrigerant. The amount of refrigerant in your appliance is indicated on the rating plate inside the appliance.

If the power cord of this appliance is damaged, it must be replaced by the manufacturer, customer service or a similarly qualified person. Improper installations and repairs may put the user at considerable risk.

Repairs may be performed by the manufacturer, customer service or a similarly qualified person only.

Only original parts supplied by the manufacturer may be used. The manufacturer guarantees that only these parts satisfy the safety requirements.

A extension cable may be purchased from customer service only.

Important information when using the appliance

- Never use electrical appliances inside the appliance (e.g. heater, electric ice maker, etc.). Explosion hazard!
- Never defrost or clean the appliance with a steam cleaner! The steam may penetrate electrical parts and cause a short-circuit. Risk of electric shock!
- Do not use pointed or sharp-edged implements to remove frost or layers of ice. You could damage the refrigerant tubes. Leaking refrigerant may cause eye injuries or ignite.
- Do not store products which contain flammable propellants (e.g. spray cans) or explosive substances in the appliance. Explosion hazard!
- Do not stand on or lean heavily against base of appliance, drawers or doors, etc
- For defrosting and cleaning, pull the mains plug out or switch off the fuse. Do not pull out the mains plug by tugging on the power cord.
- Store high-percentage alcohol tightly closed and standing up.
- Keep plastic parts and the door seal free of oil and grease. Otherwise, parts and door seal will become porous.
- Never cover or block the ventilation openings of the appliance!
- **Avoiding placing children and vulnerable people at risk:**

  At risk are children, people who have limited physical, mental or sensory abilities, as well as people who have inadequate knowledge concerning safe operation of the appliance.

  Ensure that children and vulnerable people have understood the hazards.

  A person responsible for safety must supervise or instruct children and vulnerable people who are using the appliance.

  Only children from 8 years and above may use the appliance.

  Supervise children who are cleaning and maintaining the appliance.

  Never allow children to play with the appliance.

Children in the household

- Keep children away from packaging and its parts. Danger of suffocation from folding cartons and plastic film!
- Do not allow children to play with the appliance!
- If the appliance features a lock:
  keep the key out of the reach of children!

General regulations

The appliance is suitable for refrigerating food.

This appliance is intended for use in the home and the home environment.

The appliance is suppressed according to EU Directive 2004/108/EC.

The refrigeration circuit has been checked for leaks.

This product complies with the relevant safety regulations for electrical appliances (EN 60335-2-24).

This appliance is intended for use up to a maximum height of 2000 metres above sea level.

Information concerning disposal

♻ Disposal of packaging

The packaging protects your appliance from damage during transit. All utilised materials are environmentally safe and recyclable. Please help us by disposing of the packaging in an environmentally friendly manner.

Please ask your dealer or inquire at your local authority about current means of disposal.

♻ Disposal of your old appliance

Old appliances are not worthless rubbish! Valuable raw materials can be reclaimed by recycling old appliances.



This appliance is labelled in accordance with European Directive 2012/19/EU concerning used electrical and electronic appliances (waste electrical and electronic equipment - WEEE). The guideline determines the framework for the return and recycling of used appliances as applicable throughout the EU.

⚠ Warning

Redundant appliances

1. Pull out the mains plug.
2. Cut off the power cord and discard with the mains plug.
3. Do not take out the trays and receptacles: children are therefore prevented from climbing in!
4. Do not allow children to play with the appliance once it has spent its useful life. Danger of suffocation!

Refrigerators contain refrigerant and gases in the insulation. Refrigerant and gases must be disposed of professionally. Ensure that tubing of the refrigerant circuit is not damaged prior to proper disposal.

Scope of delivery

After unpacking all parts, check for any damage in transit.

If you have any complaints, please contact the dealer from whom you purchased the appliance or our customer service.

The delivery consists of the following parts:

- Built-under appliance
- Interior fittings (depending on model)
- Bag containing installation materials
- Operating instructions
- Installation manual
- Customer service booklet
- Warranty enclosure
- Information on the energy consumption and noises

Ambient temperature and ventilation

Ambient temperature

The appliance is designed for a specific climate class. Depending on the climate class, the appliance can be operated at the following temperatures.

The climate class can be found on the rating plate. Fig. 13

Climate class	Permitted ambient temperature
SN	+10 °C to 32 °C
N	+16 °C to 32 °C
ST	+16 °C to 38 °C
T	+16 °C to 43 °C

Note

The appliance is fully functional within the room temperature limits of the indicated climatic class. If an appliance of climatic class SN is operated at colder room temperatures, the appliance will not be damaged up to a temperature of +5 °C.

Ventilation

Fig. 1/6

The refrigeration unit is ventilated only via the ventilation grille in the base. Never cover the ventilation grille or place anything in front of it. Otherwise the refrigeration unit must work harder, increasing the power consumption.

Installation location

Install the appliance in a dry, well ventilated room. The installation location should neither be exposed to direct sunlight nor near a heat source, e. g. a cooker, radiator, etc. If installation next to a heat source is unavoidable, use a suitable insulating plate or observe the following minimum distances to a heat source:

- 3 cm to electric or gas cookers.
- 30 cm to an oil or coal-fired cooker.

Undercounter

An attachment under certain worktops, e.g. stone, glass or stainless steel, is frequently not possible. You can order accessories from customer service for installation on the side walls.

Connecting the appliance

After installing the appliance, wait at least 1 hour until the appliance is switched on. During transportation the oil in the compressor may have flowed into the refrigeration system.

Before switching on the appliance for the first time, clean the interior of the appliance (see chapter “Cleaning the appliance”).

Electrical connection

The socket must be near the appliance and also freely accessible following installation of the appliance.

The appliance complies with the protection class I. Connect the appliance to 220–240 V/50 Hz alternating current via a correctly installed socket with protective conductor. The socket must be fused with a 10 to 16 A fuse.

For appliances operated in non-European countries, check whether the stated voltage and current type match the values of your mains supply. This information can be found on the rating plate. Fig. **13**

Getting to know your appliance

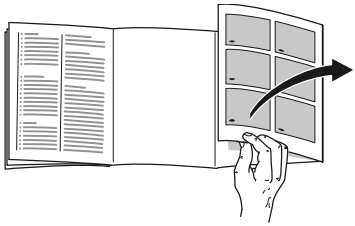

Please fold out the illustrated last page. These operating instructions refer to several models.

The features of the models may vary.

The diagrams may differ.

Fig. **1**

1 Light switch
2 Temperature controller/light
3 Glass shelf in the refrigerator compartment
4 Pull-out container
5 Vegetable container
6 Ventilation opening
7 Shelf for butter and cheese
8 Egg rack
9 Shelf for large bottles

Switching the appliance on

Turn temperature controller, Fig. 2/A, from position “0”. The appliance begins to cool. Light is switched on when the door is open.

Operating tips

The refrigerator compartment temperature rises:

- if the appliance door is opened frequently,
- if large quantities of food are placed in the refrigerator compartment,
- if the ambient temperature is high.

Setting the temperature

Turn temperature controller, Fig. 2/A, to the required setting.

When the controller is at a medium setting, the temperature drops to approx. +4 °C in the coldest zone. Fig. 3

Higher settings lower the temperature in the refrigerator compartment.

We recommend:

- Perishable food should not be stored above +4 °C.
- Low setting for short-term storage of food (energy-saving mode).
- Medium setting for long-term storage of food.
- Select a higher setting only temporarily, when the door is frequently opened or large quantities are placed in the refrigerator compartment.

Refrigeration capacity

The temperature in the refrigerator compartment may rise temporarily if large amounts of food or a lot of drinks are placed inside.

Therefore the temperature controller should be set to a higher setting for approx. 7 hours.

Usable capacity

Information on the usable capacity can be found inside your appliance on the rating plate. Fig. 13

Refrigerator compartment

The refrigerator compartment is the ideal storage location for ready meals, cakes and pastries, preserved food, condensed milk, hard cheese, fruit and vegetables sensitive to cold.

Note when loading products

Wrap or cover food before placing in the appliance. This will retain the aroma, colour and freshness of the food. In addition, flavours will not be transferred between foods and the plastic parts will not become discoloured.

Note

Avoid contact between food and rear panel. Otherwise the air circulation will be impaired.

Food or packaging could freeze to the rear panel.

Note the chill zones in the refrigerator compartment

The air circulation in the refrigerator compartment creates different chill zones:

- Coldest zone is in the pull-out container. Fig. **3**

  Note

  Store perishable food (e.g. fish, sausage, meat) in the coldest zone.

- Warmest zone is at the very top of the door.

  Note

  Store e.g. hard cheese and butter in the warmest zone. Cheese can then continue to release its flavour and the butter will still be easy to spread.

Interior fittings

You can reposition the shelves inside the appliance and the door shelves as required:

- Lift the glass shelves, pull forwards, lower and swivel out to the side. Fig. **4**
- Reposition stoppers and re-insert shelf. Fig. **5**
- Lift the door shelf and remove. Fig. **6**

Special features

(not all models)

Pull-out container

Fig. **7**

The pull-out container is especially suitable for the storage of foods which contain meat. It can be taken out for loading, unloading and cleaning.

Vegetable container with cover

Fig. **8**

The vegetable container can be taken out for loading, unloading and cleaning.

Bottle holder

Fig. **9**

The bottle holder prevents bottles from falling over when the door is opened and closed.

Sticker “OK”

(not all models)

The “OK” temperature monitor can be used to determine temperatures below +4 °C. Gradually reduce the temperature if the sticker does not indicate “OK”.

Note

When the appliance is switched on, it may take 12 hours until the temperature is reached.



Correct setting

Switching off and disconnecting the appliance

Switching the appliance off

Turn temperature controller, Fig. 2/A, to position “0”. Refrigeration unit and light switch off.

Disconnecting the appliance

If you do not use the appliance for a prolonged period:

1. Switch off the appliance.
2. Pull out mains plug or switch off fuse.
3. Clean the appliance.
4. Leave the appliance door open.

Defrosting

Refrigerator compartment defrosts fully automatically

While the refrigerating unit is running, beads of condensation or hoarfrost form at the back of the refrigerator compartment. This is quite normal. It is not necessary to wipe off the condensation or frost. The rear panel defrosts automatically. The condensation runs into the condensation channel, Fig. 10. and is conveyed to the refrigerating unit where it evaporates.

Note

Keep the condensation channel and drainage hole clean, so that the condensation can run out.

Cleaning the appliance

⚠ Caution

- Do not use abrasive, chloride or acidic cleaning agents or solvents.
- Do not use scouring or abrasive sponges. The metallic surfaces could corrode.
- Never clean shelves and containers in the dishwasher. The parts may become deformed!

Proceed as follows:

1. Before cleaning: Switch off the appliance.
2. Pull out the mains plug or switch off the fuse!
3. Take out the food and store in a cool location.
4. Wait until the layer of frost has thawed.
5. Clean the appliance with a soft cloth, lukewarm water and a little pH neutral washing-up liquid. The rinsing water must not run into the light.
6. Wipe the door seal with clear water only and then wipe dry thoroughly.
7. Rinsing water must not run through the drainage hole into the evaporation area.
8. After cleaning reconnect and switch the appliance back on.
9. Put the food back into the appliance.

Interior fittings

All variable parts of the appliance can be taken out for cleaning.

Take out glass shelves
Fig. 4

Lift the glass shelves, pull forwards, lower and swivel out to the side.

Taking out pull-out container
Fig. 7
Lift the container and pull out.

Condensation channel
Fig. 10

To clean the condensation channel, take out the pull-out container. Fig. 1/4

Regularly clean the condensation channel and drainage hole with a cotton bud or similar implement to ensure that the condensation can drain.

Taking out vegetable container with cover
Fig. 8
Lift vegetable container and take out forwards.

Take out shelves in the door
Fig. 6

Lift shelves upwards and take out.

Taking out the bottle holder
Fig. 9
Lift bottle holder at the rear and remove from the door shelf.

Ventilation opening
Fig. 11
The ventilation grille in the base can be removed for cleaning. To do this, depress the clips in the ventilation openings and simultaneously remove the ventilation grille forwards.

Tips for saving energy

- Install the appliance in a dry, well ventilated room! The appliance should not be installed in direct sunlight or near a heat source (e.g. radiator, cooker).

  If required, use an insulating plate.
- Allow warm food and drinks to cool down before placing in the appliance.
- Thaw frozen food in the refrigerator compartment and use the low temperature of the frozen food to cool refrigerated food.
- Open the appliance as briefly as possible.
- The arrangement of the fittings does not affect the energy rating of the appliance.

Operating noises

Quite normal noises

Droning
Motors are running (e.g. refrigerating units, fan).

Bubbling, humming or gurgling noises
Refrigerant is flowing through the tubing.

Clicking
Motor, switches or solenoid valves are switching on/off.

Preventing noises

The appliance is not level
Please align the appliance with a spirit level. Use the height-adjustable feet or place packing underneath them.

The appliance is not free-standing
Please move the appliance away from adjacent units or appliances.

Containers or storage areas wobble or stick
Please check the removable parts and re-insert them correctly if required.

Bottles or receptacles are touching each other
Move the bottles or receptacles slightly away from each other.

Eliminating minor faults yourself

Before you call customer service:

Please check whether you can eliminate the fault yourself based on the following information.

Customer service will charge you for advice – even if the appliance is still under guarantee!

Fault	Possible cause	Remedial action
The light does not work.	The bulb is defective.	Replace bulb. Fig. 12/B 1. Switch the appliance off. 2. Pull out mains plug or switch off fuse. 3. Slide cover forwards and remove. 4. Change the bulb. (Replacement bulb: 220-240 V a.c., E14 bulb holder, see defective bulb for wattage.)
	Light switch is jammed.	Check whether the light switch can move. Fig. 12/A
Floor of the refrigerator compartment is wet.	The condensation channels or drainage hole are blocked.	Clean the condensation channels and the drainage hole. See chapter Cleaning the appliance. Fig. 10
The temperature in the refrigerator compartment is too cold.	Temperature controller has been set too high.	Set temperature controller lower.
The refrigerating unit is switching on more frequently and for longer.	Appliance opened frequently.	Do not open the appliance unnecessarily.
	The ventilation openings have been covered.	Remove obstacles.
Appliance has no refrigeration capacity.	The temperature controller is in position “0”.	Turn the temperature controller from position “0”. Fig. 2/A
	■ Power failure. ■ The fuse has been switched off. ■ The mains plug has not been inserted properly.	Check whether the power is on, check the fuses.

Customer service

Your local customer service
can be found in the telephone directory
or in the customer-service index. Please
provide customer service
with the appliance product number
(E-Nr.) and production number (FD).

These specifications
can be found on the rating plate. Fig. 13

To prevent unnecessary call-outs, please
assist customer service by quoting
the product and production numbers.
This will save you additional costs.

Repair order and advice on faults

Contact information for all countries can be found on the enclosed customer service list.

GB	0344 892 8989	Calls charged at local or mobile rate.
IE	01450 2655	0.03 € per minute at peak. Off peak 0.0088 € per minute.

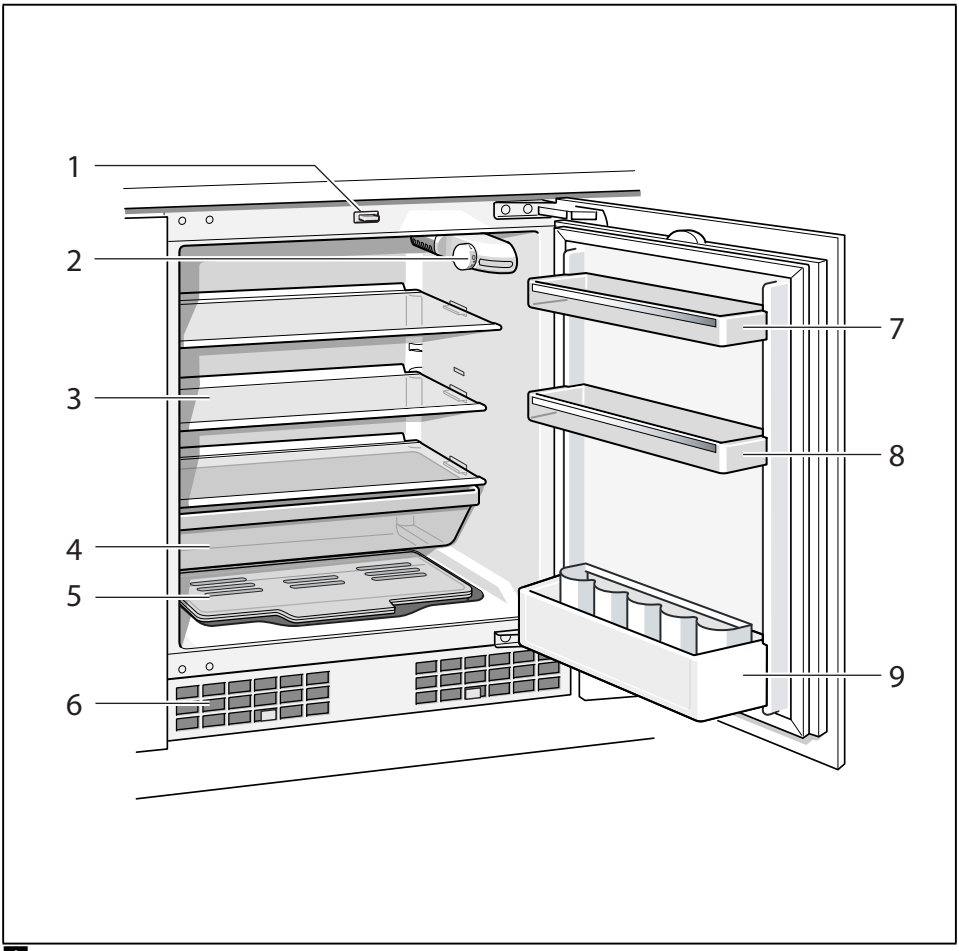

1

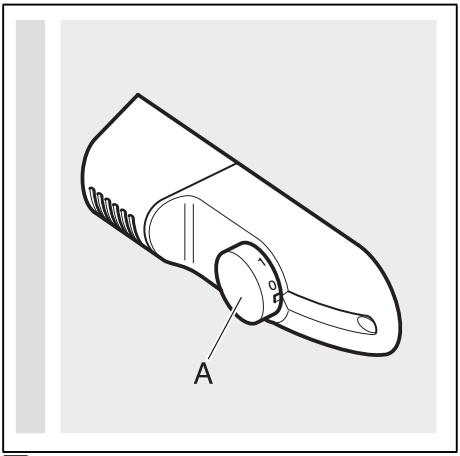

2

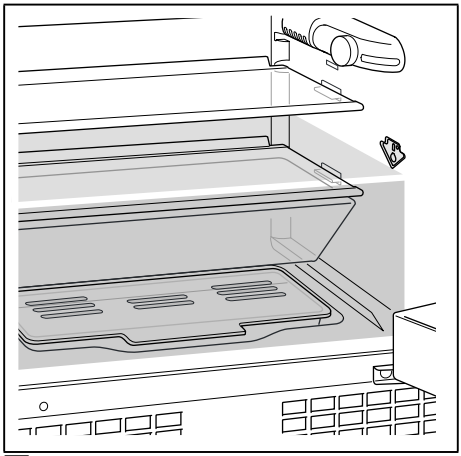

3

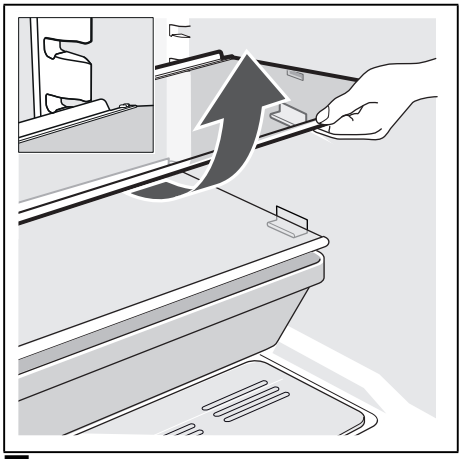

4

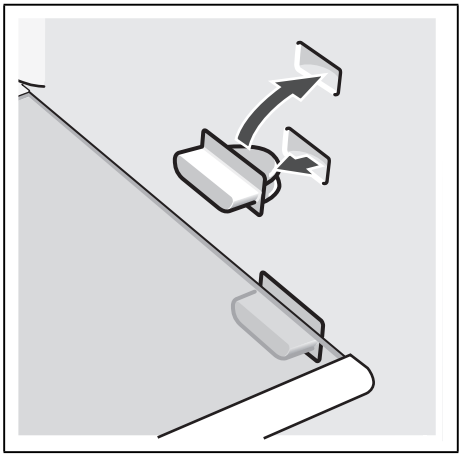

5

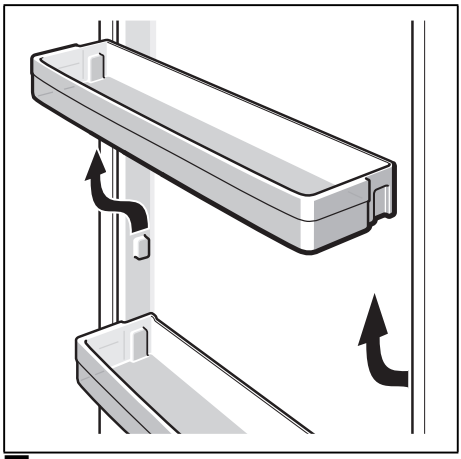

6

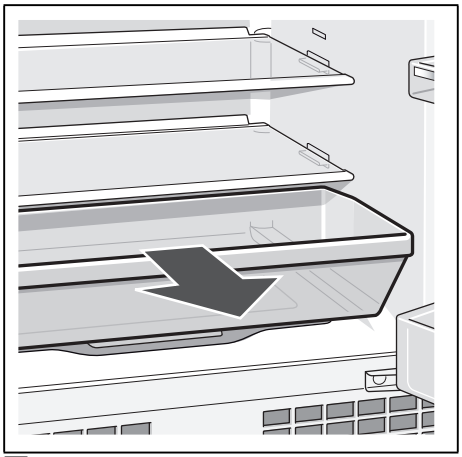

7

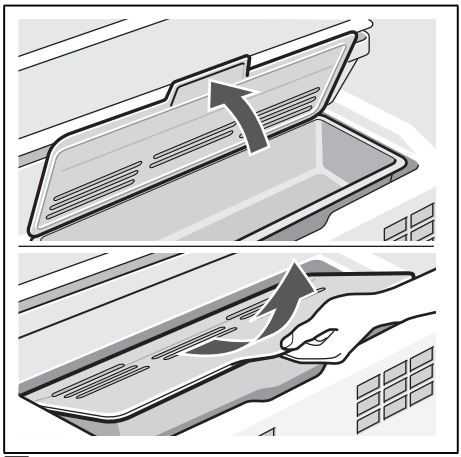

8

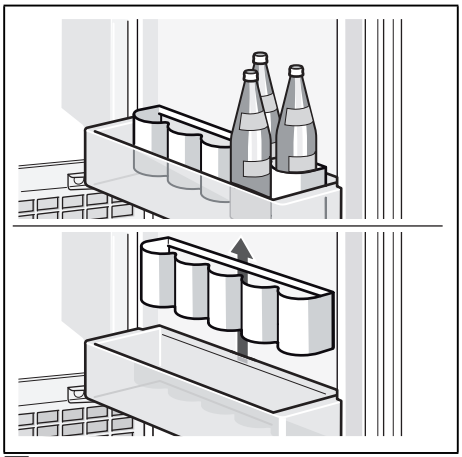

9

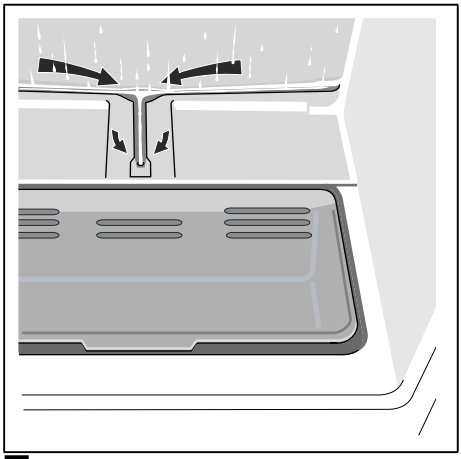

10

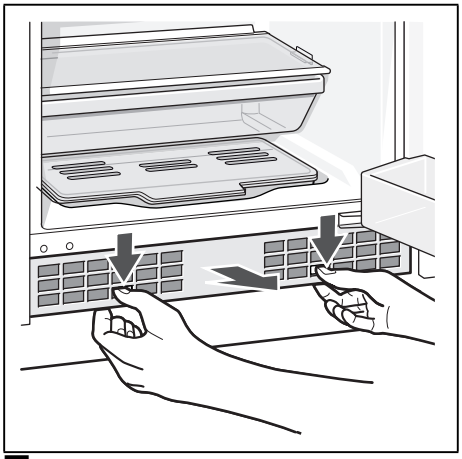

11

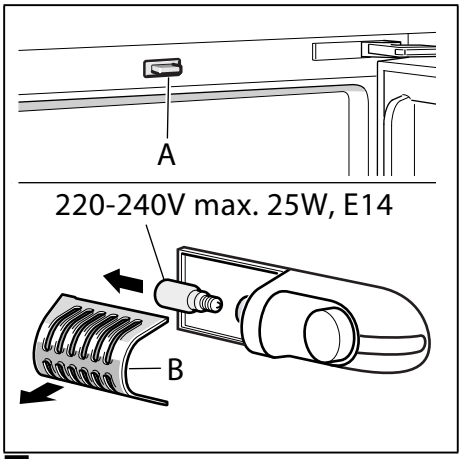

12

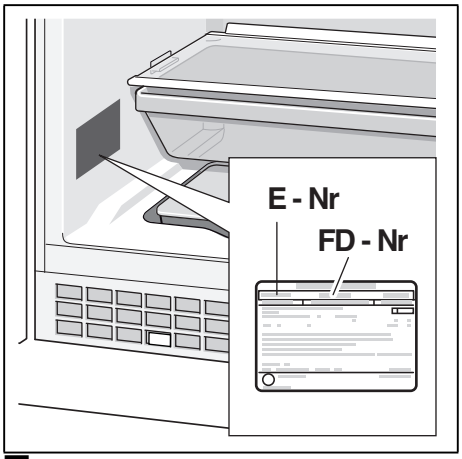

13



Constructa-Neff Vertriebs-GmbH
Carl-Wery-Straße 34
81739 München, GERMANY

www.neff-international.com

9000944996 (9508)
en