Miele

Operating instructions
Fridge-freezer



To avoid the risk of accidents or damage to the appliance it is **essential** to read these instructions before it is installed and used for the first time.

en-GB

M.-Nr. 12 359 320

Contents

Warning and Safety instructions 5

Caring for the environment 17

Installation 18
Installation site 18
Climate range 18
Ventilation requirements 19
Installing several refrigeration appliances 20
Changing the door hinging 20
Fitting supplied wall spacers 20
Installing the refrigeration appliance 21
Aligning the refrigeration appliance 22
Integrating the refrigeration appliance in a run of kitchen units 22
Appliance dimensions 25
Electrical connection 27

Saving energy 29

Guide to the appliance 30
Appliance overview 30
Control panel with start display 32
Settings mode 32
Selecting the desired function in Settings mode 34
Adjusting the interior fittings 35
Moving the door shelf/bottle shelf 35
Clipping the egg trays on 35
Adjusting or removing the bottle holder 35
Moving the adjustable shelves 35
Space for a baking tray 36
Moving the charcoal filters 36
Accessories supplied 37
Optional accessories 37

Switching on and off 38
Before using for the first time 38
Connecting the refrigeration appliance 38
Switching the refrigeration appliance on 38
Switching the refrigeration appliance off 39
Switching off the refrigerator section separately 39
Switching off for longer periods of time 40

The correct temperature 41
Temperature display 42

Contents

Setting the temperature in the refrigerator/freezer sections ... 42
Possible temperature settings ... 42

Using Super cool, Super freeze and Dynamic cooling ... 43

Selecting further settings ... 46
Explanation of the different settings ... 46
Party mode ... 46
Holiday mode ... 46
Switching the lock function on ... 47
Sabbath mode ... 48
Information on Sabbath mode ... 49
Changing the time before the door alarm is triggered ... 49
Adjusting the volume of alarms and buzzers ... 49
Adjusting the display brightness ... 50
Switching off demo mode ... 50
Resetting the settings to their default settings ... 51
Information ... 51
Charcoal filter change indicator ... 51
Cleaning mode ... 51

Temperature and door alarm ... 52
Door alarm ... 53

Storing food in the fridge zone ... 54
Different storage zones ... 54
Food which is not suitable for storage in the refrigerator section ... 55
Notes on buying food ... 55
Storing food correctly ... 56

Storing food in the DailyFresh drawer ... 57

Freezing and storing food ... 59
Freezing fresh food ... 59
Maximum freezing capacity ... 59
Storing frozen food ... 59
Home freezing ... 60
Storage time for frozen food ... 61
Cooling drinks quickly ... 62
Using accessories ... 62
Making ice cubes ... 62

Defrosting ... 63

Contents

Cleaning and care 64
Cleaning agents 64
Preparing the refrigeration appliance for cleaning 65
Cleaning the inside of the appliance 66
Cleaning accessories by hand or in the dishwasher 66
Removing and dismantling accessories for cleaning 67
Inserting the glass shelves and drawers into the freezer section 68
Cleaning the front of the appliance and the side panels 70
Cleaning the door seal 70
Cleaning the ventilation gaps 70
After cleaning 71

Problem solving guide 72

Noises 82

Service 83
Contact in the event of a fault 83
EPREL database 83
Warranty 83

EU Conformity declaration 84

UK Conformity declaration 85

This refrigeration appliance complies with current safety requirements. Inappropriate use can, however, lead to personal injury and material damage.

Please read the operating and installation instructions carefully before using the refrigeration appliance for the first time. They contain important information on safety, installation, use and maintenance. This is to protect yourself from injury, and from damaging your refrigeration appliance.

In accordance with standard IEC 60335-1, Miele expressly and strongly advises that you read and follow all information provided on installing the refrigeration appliance, as well as the safety notes and warnings.

Miele cannot be held liable for injury or damage caused by non-compliance with these instructions.

Keep these operating and installation instructions in a safe place and pass them on to any future owner.

Correct application

▶ This refrigeration appliance is intended for use in the home and in similar environments, for example
– in shops, offices and similar work settings
– by the guests in hotels, motels, bed & breakfasts and other typical home settings.
This refrigeration appliance is not intended for outdoor use.

▶ This appliance is intended for domestic use only for cooling and storing food and drink as well as for storing deep frozen food, freezing fresh food and for making ice.
Any other usage is not supported by the manufacturer and could be dangerous.

▶ This refrigeration appliance is not suitable for storing and keeping cool medicines, blood plasma, laboratory preparations or similar substances or products that are subject to the Medical Device Directive. Incorrect use of the refrigeration appliance for such purposes may cause deterioration of the items stored. The refrigeration appliance is also not suitable for use in areas where there is a risk of explosion.
Miele cannot be held liable for damage caused by improper or incorrect use or operation of the appliance.

▶ The appliance can only be used by people with reduced physical, sensory or mental capabilities, or lack of experience and knowledge, if they are supervised whilst using it, or have been shown how to use it in a safe way and recognise and understand the consequences of incorrect operation.

Safety with children

▶ Children under 8 years of age must be kept away from the refrigeration appliance unless they are constantly supervised.

▶ Children 8 years and older may only use the appliance unsupervised if they have been shown how to use it in a safe way and recognise and understand the consequences of incorrect operation.

▶ Children must not be allowed to clean or maintain the appliance unsupervised.

▶ Please supervise children in the vicinity of the appliance and do not let them play with it.

▶ Danger of suffocation! Whilst playing, children could become entangled in packaging (such as plastic wrapping) or pull it over their head and suffocate. Keep packaging material away from children.

Technical safety

▶ The coolant circuit has been checked for leaks. The refrigeration appliance complies with statutory safety requirements and the appropriate EU directives.



▶ This refrigeration appliance contains the refrigerant isobutane (R600a), a natural gas which is environmentally friendly but flammable. The refrigerant does not damage the ozone layer and does not contribute to the greenhouse effect.
The use of this refrigerant has, however, led to a slight increase in the noise level of the appliance. In addition to the noise of the compressor, you might be able to hear the refrigerant flowing around the cooling circuit. Unfortunately, this cannot be avoided, but it does not affect the performance of the refrigeration appliance.
When transporting and installing the refrigeration appliance, ensure that no parts of the cooling circuit are damaged. Splashes of refrigerant can damage the eyes.
In the event of damage:

- Avoid naked flames or anything which creates a spark.
- Disconnect the refrigeration appliance from the mains electricity supply.
- Ventilate the room where the refrigeration appliance is located for several minutes.
- Contact the Miele Customer Service Department.

▶ The more refrigerant there is in a refrigeration appliance, the larger the room it should be installed in. In the event of a leakage, if the appliance is in a small room, there is the danger of a combustible gas/air mixture building up. For every 8 g of refrigerant at least 1 m^3 of room space is required. The amount of refrigerant in the refrigeration appliance is stated on the data plate inside the appliance.

▶ To avoid the risk of damage to the appliance, make sure that the connection data (fuse rating, frequency and voltage) on the data plate corresponds to the household supply.
Check that this is the case before connecting the appliance. Consult a qualified electrician if in any doubt.

▶ The electrical safety of this appliance can only be guaranteed when correctly earthed. It is essential that this standard safety requirement is met. If in any doubt please have the electrical installation tested by a qualified electrician.

▶ Temporary or permanent operation on an autonomous power supply system or a power supply system that is not synchronised with the mains power supply (e.g. island networks, back-up systems) is possible. A prerequisite for operation is that the power supply system complies with the specifications of EN 50160 or an equivalent standard.
The function and operation of the protective measures provided in the domestic electrical installation and in this Miele product must also be maintained in isolated operation or in operation that is not synchronised with the mains power supply, or these measures must be replaced by equivalent measures in the installation. As described, for example, in the current version of BS OHSAS 18001–2 ISO 45001.

▶ If the electrical connection cable supplied is damaged, it must only be replaced by an original spare part to prevent a hazard for the user. Miele can only guarantee the safety of the appliance when original Miele spare parts are used.

▶ Do not connect the appliance to the mains electrical supply by a multi-socket adapter or extension lead. These are a fire hazard and do not guarantee the required safety of the appliance.

▶ If moisture gets into electrical components or into the mains connection cable, it could cause a short circuit. Therefore, do not operate this refrigeration appliance in areas which are exposed to moisture (e.g in a garage or utility room).

▶ This appliance must not be used in a non-stationary location (e.g. on a ship).

▶ Do not use a damaged appliance. It could be dangerous. Check the appliance for visible signs of damage.

▶ This refrigeration appliance is not intended for use as a built-in appliance.

▶ The appliance must be isolated from the electricity supply during installation, maintenance and repair work.

▶ Unauthorised installation, maintenance and repairs can cause considerable danger for the user.
Installation, maintenance and repairs must only be carried out by a Miele authorised technician.

▶ While the appliance is under warranty, repairs should only be undertaken by a Miele authorised service technician. Otherwise the warranty is invalidated.

▶ Faulty components must only be replaced with genuine Miele original spare parts. Miele can only guarantee the safety standards of the appliance when Miele replacement parts are used.

▶ This refrigeration appliance is supplied with a special lamp to cope with particular conditions (e.g. temperature, moisture, chemical resistance, abrasion resistance and vibration). This lamp must only be used for the purpose for which it is intended. The lamp is not suitable for room lighting. Replacement lamps may only be fitted by a Miele authorised technician or by the Miele Customer Service Department. This refrigeration appliance contains several light sources with at least energy efficiency class G.

Proper installation

▶ Change the door hinging (if necessary) as described in the installation instructions supplied with the appliance.

▶ Two people are required to install the refrigeration appliance.

Correct use

▶ This refrigeration appliance is designed for use within specific ambient temperatures (climate range). Do not use in ambient temperatures for which it is not designed. The climate range is stated on the data plate in the interior cabinet of the refrigeration appliance. A lower ambient temperature will cause the compressor to switch off for longer periods, meaning that the refrigeration appliance is unable to maintain the required temperature.

▶ Do not cover or block the air vents as this could impair the efficiency of the appliance, increase the electricity consumption and could cause damage to the components.

▶ If storing food which contains a lot of fat or oil in the appliance or the door, make sure that it does not come into contact with plastic components as this could cause stress cracks or break the plastic.

▶ Risk of fire and explosion. Do not store explosive materials in the refrigeration appliance or any products containing propellants (e.g. spray cans). Electrical components can cause flammable mixes of gases to ignite.

▶ Danger of explosion. Do not operate any electrical equipment (e.g. an electric ice-cream maker) inside the refrigeration appliance. Danger of sparking and explosion.

▶ Danger of injury and damage to the appliance. Do not store cans or bottles containing carbonated drinks or liquids which could freeze in the freezer zone. Otherwise they could burst.

▶ Danger of injury and damage to the appliance. When cooling drinks quickly in the freezer zone, make sure bottles are not left in for more than one hour. Otherwise they could burst.

▶ Danger of injury. Never handle frozen food or the metal parts of the appliance with wet hands. Your hands may freeze to the frozen food or to the metal.

▶ Danger of injury. Do not take ice cubes out with your bare hands and never place ice cubes or ice lollies in your mouth straight from the freezer zone. The very low temperature of the frozen food can cause frost burn to the lips and tongue.

▶ Do not refreeze partially or fully defrosted food. Consume defrosted food as soon as possible, as it will lose its nutritional value and spoil if left for too long. Defrosted food may only be re-frozen after it has been cooked.

▶ Observe the manufacturer's “use-by” dates and storage instructions given on food to avoid the risk of food poisoning. Storage times will depend on several factors, including the freshness and quality of the food, as well as the temperature at which it is stored.

Accessories and spare parts

▶ Only use original Miele accessories. If other parts are used, warranty, performance and product liability claims will be invalidated.

▶ Miele will guarantee to supply functional spare parts for a minimum of 10 years and up to 15 years following the discontinuation of your refrigeration appliance.

Cleaning and care

▶ Do not use any oils or grease on the door seals, as these will cause the seals to deteriorate and become porous with time.

▶ Do not use a steam cleaning appliance to clean or defrost this appliance.
Steam could reach electrical components and cause a short circuit.

▶ Sharp edged or pointed objects will damage the evaporator, causing irreversible damage to the appliance. Do not use sharp edged or pointed objects to

- remove frost and ice,
- separate frozen food or remove ice trays.

▶ Do not place electric heaters or candles in the appliance to defrost it. These can damage the plastic parts.

▶ Do not use defrosting sprays or de-icers, as they could contain substances which could damage the plastic parts or which might cause the build-up of gases and pose a danger to health.

Transport

▶ Always transport the appliance in an upright position and in its original transport packaging to avoid damage in transit.

▶ Danger of injury and damage to the appliance. The refrigeration appliance is very heavy and must be transported by two people.

Disposal of your old appliance

▶ Children playing could become trapped in the appliance and could suffocate.

- Remove the appliance doors.
- Remove the drawers.
- Leave the adjustable shelves in the refrigeration appliance so children cannot climb inside.
- If your old refrigeration appliance has a door lock, destroy it. This will prevent the risk of children playing accidentally locking themselves in and endangering their lives.

▶ Risk of electric shock!

- Cut the power plug off the mains connection cable.
- Cut the mains connection cable off the old appliance.

▶ Dispose of everything separately from the old appliance.

▶ During and after disposal, make sure that the refrigeration appliance is not placed near petrol or other flammable gases and liquids.

▶ Risk of fire due to escaping oil or refrigerant!
The refrigerant and oil inside the appliance are flammable. In high enough concentrations, escaping refrigerant or oil may ignite if they come into contact with an external heat source.
During disposal, make sure that the cooling circuit is not damaged in order to prevent refrigerant and oil escaping in an uncontrolled manner (see the data plate for details of the refrigerant).

▶ Splashes of coolant can damage the eyes. Be careful not to damage any part of the pipework whilst awaiting disposal, e.g. by

- puncturing the coolant channels in the condenser,
- bending any pipework, or
- scratching the surface coating.

Symbol on the compressor (depending on model)

This information is only relevant for recycling. There is no risk during normal operation.



▶ The oil in the compressor can be fatal if swallowed or if it penetrates the airways.

Disposing of the packaging material

The packaging material is used for handling and protects the appliance from transport damage. The packaging material used is selected from materials which are environmentally friendly for disposal and can generally be recycled.

Recycling the packaging material reduces the use of raw materials. Use material-specific collection points for valuable materials and take advantage of return options. Your Miele dealer will take the packaging material away.

Disposing of your old appliance

Electrical and electronic appliances contain many valuable materials. They also contain certain materials, compounds and components which were essential for their correct functioning and safety. These could be hazardous to human health and to the environment if disposed of with household waste or if handled incorrectly. Please do not, therefore, dispose of your old appliance with household waste.



Take care not to damage your refrigeration appliance before or during disposal in an authorised, environmentally friendly manner.
This is to ensure that refrigerant in the cooling circuit and oil in the compressor is contained, and will not leak into the environment.

Instead, please make use of officially designated collection and disposal points to dispose of and recycle electrical and electronic appliances in your local community, with your dealer or with Miele, free of charge. By law, you are solely responsible for deleting any personal data from the old appliance prior to disposal. You are legally obliged to remove any old batteries which are not securely enclosed by the appliance and to remove any lamps without destroying them, where this is possible. These must be taken to a suitable collection point where they can be handed in free of charge. Please ensure that your old appliance poses no risk to children while being stored for disposal.

Installation site

⚠ Risk of damage due to high humidity.

In environments with high humidity, condensation can build up on external refrigeration appliance panels. This condensate can cause corrosion on external appliance panels.

Install the refrigeration appliance in a dry and/or air-conditioned room with sufficient ventilation.

After installation please make sure that the appliance door(s) closes/ close properly and that the specified ventilation gaps are adhered to.

⚠ Fire risk and risk of damage from appliances which give off heat.

Appliances which give off heat can catch fire and set fire to the refrigeration appliance.

Do not place appliances which give off heat, such as mini-ovens, double burner hobs or toasters on the refrigeration appliance.

⚠ Fire risk and danger of damage from open flames.

Open flames can set fire to the refrigeration appliance.

Keep open flames (e.g. a candle) away from the refrigeration appliance.

This appliance should be installed in a dry, well-ventilated room.

When deciding on the installation site, please bear in mind that your refrigeration appliance will use more energy if installed near to a heater, a cooker or other appliance that gives off heat.
Avoid direct sunlight.
The higher the ambient temperature, the longer the compressor runs and the higher the energy consumption is.

When installing the refrigeration appliance, please note the following:

- The socket must be easily accessible in an emergency, not concealed behind the appliance.
- The mains plug and mains connection cable must not touch the rear of the refrigeration appliance as they could be damaged by vibrations from the appliance.
- Do not plug in other appliances into sockets behind this appliance.
- When positioning the appliance, ensure the mains connection cable is not trapped or damaged.
- Do not position or operate multi-socket adapters, distributor strips or other electronic devices (such as halogen transformers) at the rear of the appliance.
- The floor at the installation site must be horizontal and level and must be as high as the surrounding floor.

Climate range

This refrigeration appliance is designed for use within specific ambient temperatures (climate range). Do not use in

ambient temperatures for which it is not designed. The climate range is stated on the data plate in the interior cabinet of the refrigeration appliance.

Climate range	Ambient temperature
SN	+10 to +32 °C
N	+16 to +32 °C
ST	+16 to +38 °C
T	+16 to +43 °C

A lower ambient temperature leads to the compressor switching off for longer periods. This can cause the internal temperature in the refrigeration appliance to rise with the risk of food deteriorating and going off.

Ventilation requirements

⚠ Risk of fire and damage due to insufficient ventilation.

If the refrigeration appliance is not ventilated sufficiently, the compressor will run more frequently and for longer periods. This will result in increased energy consumption and a higher operating temperature for the compressor. This may, in turn, cause damage to the compressor.

Please ensure that there is adequate ventilation around the refrigeration appliance.

It is essential to observe the required ventilation gaps.

The ventilation gaps must not be covered or blocked in any way.

They must also be regularly dusted.

Air at the back of the refrigeration appliance gets warm. Sufficient space for proper ventilation must therefore be ensured (see “Installation dimensions”).

Installing several refrigeration appliances

⚠ Risk of damage due to condensation on external appliance panels.

In environments with high humidity, condensation can build up between the external refrigeration appliance panels, which can cause corrosion.

Do **not** place different refrigeration appliances **directly** next to one another.

A distance of at least 70 mm must be maintained between the refrigeration appliances.

Changing the door hinging

⚠ Danger of injury and damage when changing the door hinging.

There is an increased danger of injury and damage if the door hinging is installed by a single person.

Always change the door hinging with the help of a second person.

The refrigeration appliance is supplied with hinges on the right. If left-hand hinging is required, the hinges must be changed (see accompanying installation instructions).

Fitting supplied wall spacers

The wall spacers supplied must be used in order to achieve declared energy consumption values and to prevent the build-up of condensation at high ambient temperatures. The refrigeration appliance depth is increased by approx. 15 mm for appliances with wall spacers fitted.

If the wall spacers are not used, the functionality of the refrigeration appliance is not affected. Energy consumption is only slightly increased with less distance between the appliance and the wall.

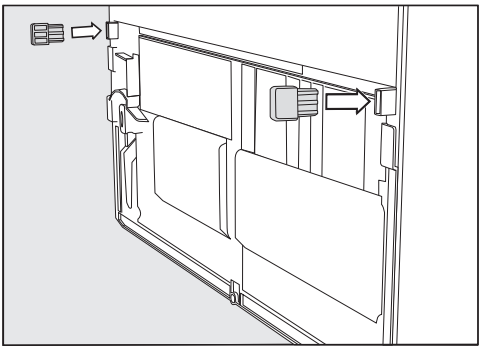

- Fit the wall spacers onto the back of the refrigeration appliance on the bottom left and right.

Installing the refrigeration appliance

⚠ Risk of injury and damage due to the refrigeration appliance tipping over.

There is an increased risk of injury and damage if the refrigeration appliance is installed by a single person.

Two people are required for installing the refrigeration appliance.

⚠ Risk of damage to the appliance door caused by impact.

The appliance door could hit the wall of the room resulting in damage to the door.

Protect the appliance door by fitting a felt stopper, for example, to the wall of the room.

⚠ Risk of damaging the floor.

Moving the refrigeration appliance can cause damage to the floor.

Move the refrigeration appliance carefully on floors that are sensitive to scratching.

For easier installation, there are transport handles on the back at the top and transport wheels underneath the refrigeration appliance.

Tip: The refrigeration appliance must be empty when it is installed.

- Prepare the refrigeration appliance for installation as close as possible to its intended installation site.
- Connect the refrigeration appliance to the electricity supply as described in “Electrical connection”.
- Move the refrigeration appliance carefully to its intended installation site.
- Position the refrigeration appliance with the wall spacers (if used) or the back close to the wall.

Aligning the refrigeration appliance

⚠ Risk of damage and injury caused by the appliance door falling out or the refrigeration appliance tipping over.

If the additional adjustable foot on the hinge plate at the bottom is not resting firmly on the floor, the appliance door can fall out or the refrigeration appliance can tip over.

Use the open spanner supplied with the appliance to unscrew the adjustable foot until it is resting on the floor.

Then unscrew the adjustable foot by a further quarter turn.

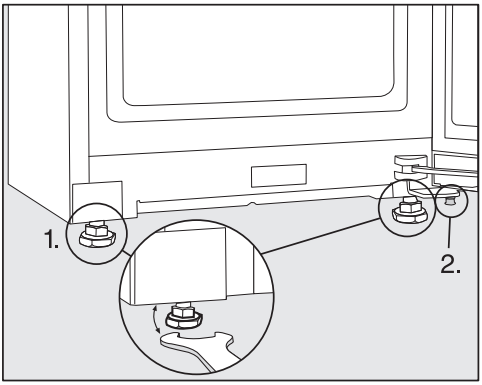

- Use the spirit level and the open spanner supplied to align the refrigeration appliance and support the appliance door.

1. Adjust the front adjustable feet.
2. Unscrew the additional adjustable foot out until it is touching the floor. Then unscrew the adjustable foot by a further quarter turn.

Integrating the refrigeration appliance in a run of kitchen units

The refrigeration appliance can be surrounded by kitchen units.

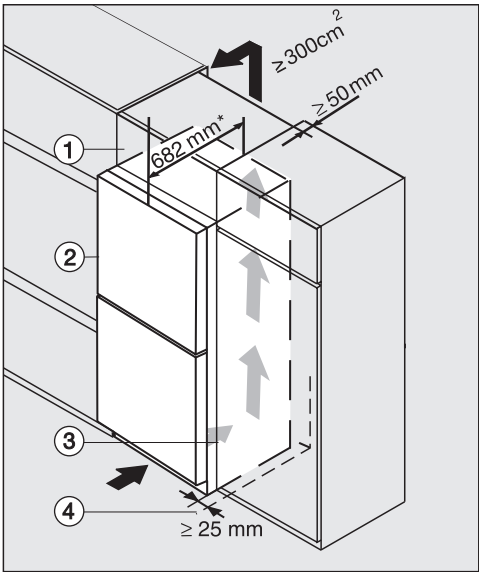

Refrigeration appliance with glass front K(S)/FN(S)/KFN 4xxx X **bb, brws, bs, grgr**
① Top box
② Refrigeration appliance, door depth = 82 mm
③ Housing unit
④ Wall

* The appliance depth is increased by approx. 15 mm for refrigeration appliances with wall spacers fitted.

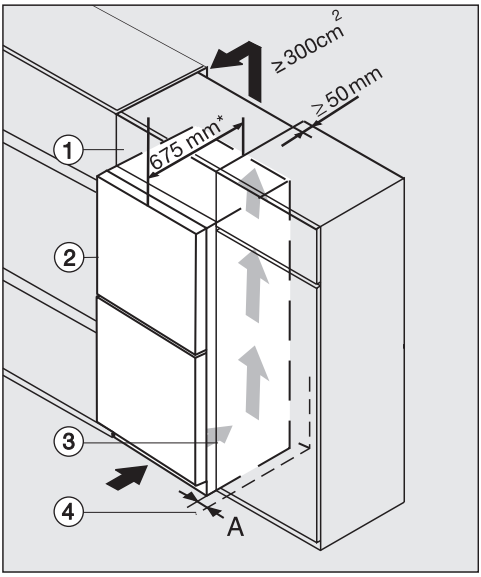

K(S)/FN(S)/KFN 4xxx X **edst/cs, ws, bst, el**
① Top box
② Refrigeration appliance, door depth = 75 mm
③ Housing unit
④ Wall
A = 25 mm (with recessed grip)/60 mm (with handle)

* The appliance depth is increased by approx. 15 mm for refrigeration appliances with wall spacers fitted.

⚠ Risk of fire and damage due to insufficient ventilation.

If the refrigeration appliance is not ventilated sufficiently, the compressor will run more frequently and for longer periods. This will result in increased energy consumption and a higher operating temperature for the compressor. This may, in turn, cause damage to the compressor.

Please ensure that there is adequate ventilation around the refrigeration appliance.

It is essential to observe the required ventilation gaps.

The ventilation gaps must not be covered or blocked in any way.

They must also be regularly dusted.

The larger the ventilation gap, the more economically the compressor will work.

Installation

■ Install the refrigeration appliance next to the housing unit.

- The appliance front must protrude in front of furniture fronts by at least the door depth. This enables the appliance door to be opened and shut without being obstructed.
- When installed next to a wall ④, a distance (**A**) must be maintained on the hinge side between the wall ④ and the refrigeration appliance ②.
- To match the height of the rest of the kitchen units, the refrigeration appliance can be fitted with a suitable top box ①.

  A ventilation duct of at least 50 mm depth must be provided across the whole width of the top box.

  The ventilation gap under the ceiling must be at least 300 cm^2 to ensure that warm air can escape without obstruction.

Appliance dimensions

Installation dimensions/View from above

KFN 4375 ..., KFN 4393 ..., KFN 4395 ...

All dimensions are given in mm.

The refrigeration appliance will function correctly if the specified ventilation cross-sections are kept clear.

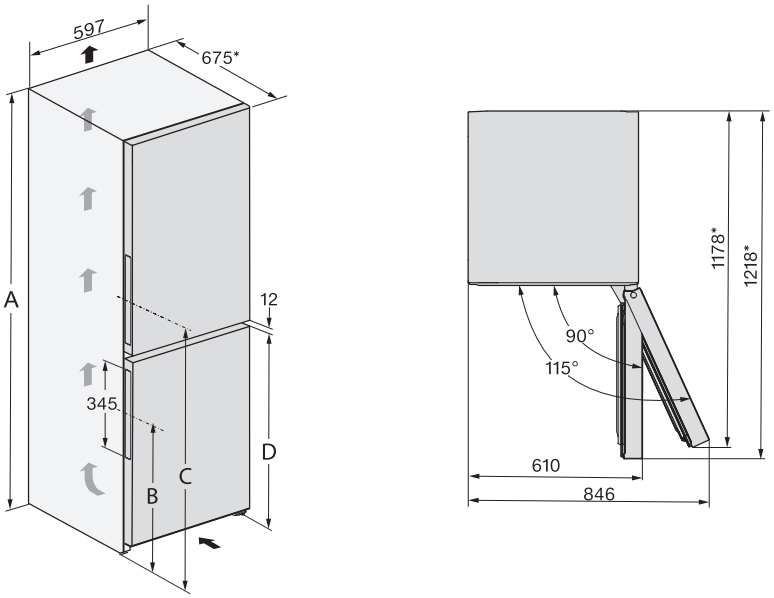

* Dimensions without wall spacers fitted. Appliance depth is increased by 15 mm with the wall spacers supplied fitted.

	A	B	C	D
KFN 4375 ...	1850	594	1061	821
KFN 4393 ...	2015	754	1221	981
KFN 4395 ...	2015	594	1061	821

Installation

Connections

KFN 4375 ..., KFN 4393 ..., KFN 4395 ...

All dimensions are given in mm.

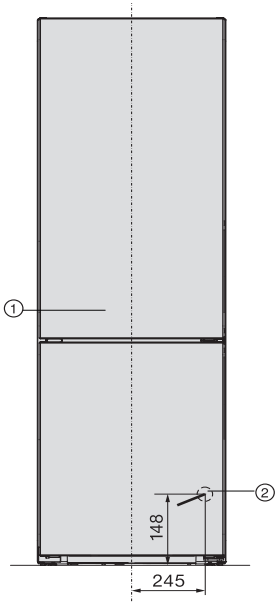

① View from the front

② Mains connection cable, length = 2000 mm
A longer mains connection cable is available to order from the Miele Customer Service Department.

Electrical connection

The refrigeration appliance must only be connected to an earthed socket using the mains connection cable supplied.

The socket must be easily accessible after the refrigeration appliance has been installed. If the socket is not easily accessible, ensure that a suitable means of disconnection is provided on the installation side for each pole.

⚠ Risk of fire from overheating.
Connecting the refrigeration appliance to a multi-socket plug adapter or to an extension lead can overload the cable.
For safety reasons, do not use an extension lead or multi-socket adapter.

The electrical installation must comply with VDE 0100 requirements.

For safety reasons, we recommend using a type ⎓ residual current device (RCD) in the assigned electrical installation for connecting the refrigeration appliance.

If the mains connection cable is damaged, it must only be replaced with a specific mains connection cable of the same type (available from the Miele Customer Service Department). For safety reasons, such replacement may only be carried out by a qualified specialist or the Miele Customer Service Department.

These operating instructions and the data plate indicate the nominal power consumption and the appropriate fuse rating. Compare this information with the data of the on-site electrical connection. If in any doubt, consult a qualified electrician.

Temporary or permanent operation on an autonomous power supply system or a power supply system that is not synchronised with the mains power supply (e.g. island networks, back-up systems) is possible. A prerequisite for operation is that the power supply system complies with the specifications of EN 50160 or an equivalent standard. The function and operation of the protective measures provided in the domestic electrical installation and in this Miele product must also be maintained in isolated operation or in operation that is not synchronised with the mains power supply, or these measures must be replaced by equivalent measures in the installation. As described, for example, in the current version of VDE-AR-E 2510-2.

Connecting the refrigeration appliance

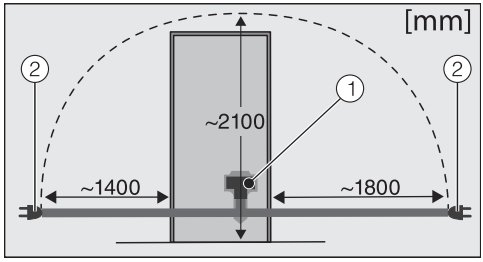

Back of the refrigeration appliance
① Appliance plug connector
② Mains plug

- Plug the plug connector into the socket.

Make sure that the plug connector has clicked into position correctly.

- Insert the plug of the refrigeration appliance into the socket.

The refrigeration appliance is now connected to the electricity supply.

How to save energy:

Installation site

The refrigeration appliance has to cool more often at higher ambient temperatures and consumes more energy in the process. Therefore, you should:

- Install the refrigeration appliance in a well-ventilated room.
- Do not install the refrigeration appliance near to a heat source (heater element, cooker).
- Protect the refrigeration appliance from direct sunlight.
- Ensure an ideal ambient temperature of 20 °C.
- Clean the ventilation gaps on a regular basis to remove any dust.

Temperature setting

The colder the temperature, the higher the energy consumption. The following settings are recommended:

- 4 to 5 °C in the refrigerator section.
- -18 °C in the freezer section.

Use

Energy consumption is increased by heat input and impeded air circulation. Therefore, you should:

- Only open the appliance door(s) when necessary and for as short a time as possible. Arrange the food in such a way that makes it easy to find in the appliance.
- Always close the appliance door(s) properly after opening them.
- Allow hot food and drinks to cool down before placing them in the refrigeration appliance.
- Store food well packaged or covered.
- Do not overfill the compartments to allow air to circulate.
- Place frozen food in the fridge zone to defrost.
- Keep drawers and shelves arranged as they were when the appliance was delivered.

Guide to the appliance

Appliance overview

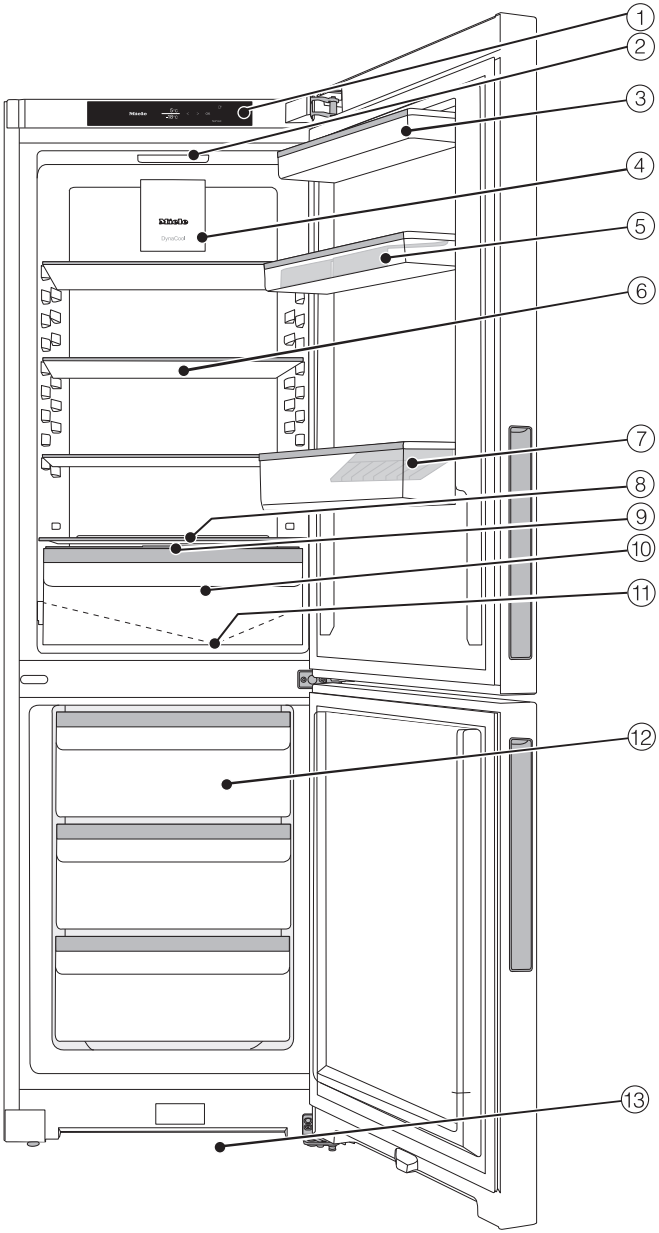

This drawing is for illustration purposes only.

① Display
② Interior lighting
③ Shelves in the appliance door
④ Fan
⑤ Shelf with egg tray in the appliance door
⑥ Adjustable shelf
⑦ Bottle shelf with bottle holder
⑧ Space for a baking tray (XL interior)
⑨ Compartment lid for setting the humidity level in the DailyFresh drawer
⑩ DailyFresh drawer for fruit and vegetables (humidity-controlled)
⑪ Condensate channel and drain hole
⑫ Freezer drawers
⑬ Ventilation gap

Guide to the appliance

Control panel with start display

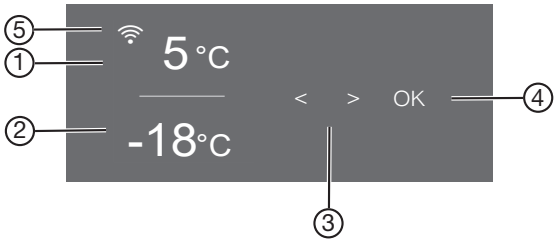

① Temperature display for fridge zone

② Temperature display for freezer section

③ Sensor controls for selecting a setting

④ *OK* sensor control for confirming a selection

⑤ Display for Miele@home connection status
(only visible when the Miele@home function has been set up)

Settings mode ⚙

In Settings mode, you can select the following appliance functions and alter their settings to some extent:

Symbol	Function	Factory default
	Switch the Party mode function on or off (see “Selecting further settings”)	Off
	Switch the Holiday mode function on or off (see “Selecting further settings”)	Off
	Switch the system lock on or off (see “Selecting further settings”)	(off)
	Switching the refrigeration appliance off (see “Switching on and off”)	
	Switch the Sabbath mode function on or off (see “Selecting further settings”)	Off

	Call up information on the Sabbath mode function (see “Selecting further settings”)	—
	Change the time before the door alarm is triggered (see “Selecting further settings”)	1:00
/	Switch the keypad tone on or off	On
/	Change the volume of the alarms and buzzers or switch them off entirely (see “Selecting further settings”)	On /level 5
	Change the display brightness (see “Selecting further settings”)	Level 4
°C / °F	Change the temperature unit (°Celsius or °Fahrenheit)	°C
	Switch the Demo mode function off (only visible when switched on) (see “Selecting further settings”)	Off
	Reset to default settings (see “Selecting further settings”)	—
	Call up information (model designation and serial number) about your refrigeration appliance (see “Selecting further settings”)	—
	Switch on the reminder to change the charcoal filter (see “Optional accessories”) (see “Selecting further settings”)	Off
	Switch Cleaning mode on or off (see “Cleaning and care”)	Off

Selecting the desired function in Settings mode ⚙

- Touch the *OK* sensor control on the control panel.

will appear in the display (refrigerator section is selected).

- Use the < or > sensor control to scroll to the ⚙ symbol.
- Touch *OK*.
- Select the function you want using the < or > sensor control.
- Touch *OK* to select the function you want.

When the function is **switched on**, a dot appears in the upper corner of the display •.

- Touch *OK* to deselect a selected function.

When the function is **switched off**, the dot in the upper corner of the display goes out.

Exiting Settings mode ⚙

- Use the < or > sensor control to scroll to the ⮌ symbol.
- Touch *OK*.
- Use the < or > sensor control to scroll to the ⮌ symbol and touch *OK*.
- **Alternatively**:
  Wait approx. 15 seconds after the last press of a button.
  Settings mode is then exited automatically.

Adjusting the interior fittings

Moving the door shelf/bottle shelf

Only move the door/bottle shelves in the appliance door when they are empty.

- Push the door/bottle shelves upwards, then remove them by pulling them forwards.
- Replace the door/bottle shelves at the required height.

Clipping the egg trays on

- Clip the egg trays onto the rear edge of the door shelf.

Adjusting or removing the bottle holder

The non-slip fins of the bottle holder make bottles more secure when you open and close the appliance door.

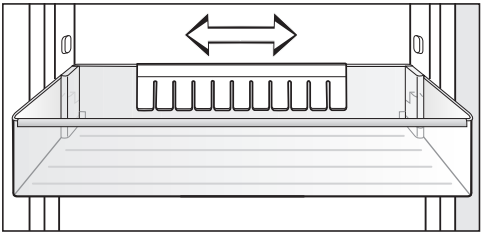

The bottle holder can be moved to the left or right to create more room for drink cartons.

The bottle holder can be removed completely, e.g. for cleaning:

- pull the bottle holder up to remove it.

Moving the adjustable shelves

The shelves can be adjusted according to the height of the food.

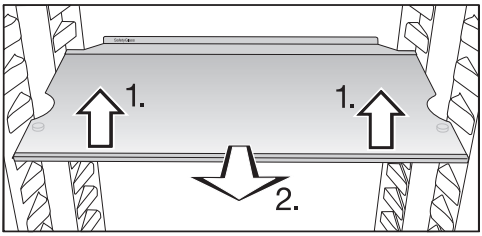

- Raise the shelf slightly at the front and pull it forwards a little.
- Lift it until the notches at the side are in line with the shelf supports. The shelf can then be raised or lowered to the required level.
- Push the shelf in.

Stoppers prevent the shelves from being dislodged by mistake.

The raised edge on the protective strip at the back must face upwards to prevent food from touching the back of the appliance and freezing to it.

Space for a baking tray

A baking tray can be placed above the drawers. The baking tray can be no more than 466 mm wide, 386 mm deep and 50 mm high.

■ Open the appliance door as far as it will go.

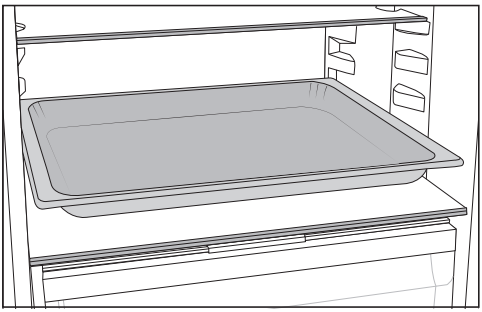

■ Place the baking tray on the dividing plate.

Tip: Let the baking tray cool down to room temperature before putting it in the refrigerator section.

Moving the charcoal filters

KKF-FF charcoal filters with holder (Active AirClean) are available as optional accessories (see “Optional accessories”).

When storing very strong smelling food (e.g. very ripe cheese):

- Place the holder with the charcoal filters on the shelf where this food is kept.
- Change the charcoal filters sooner if necessary.
- Use more charcoal filters (with holders) in the refrigeration appliance.

The holder for the charcoal filters sits on the protective strip at the back of the shelf.

■ To move the charcoal filter, pull the holder upwards to remove it from the protective strip.

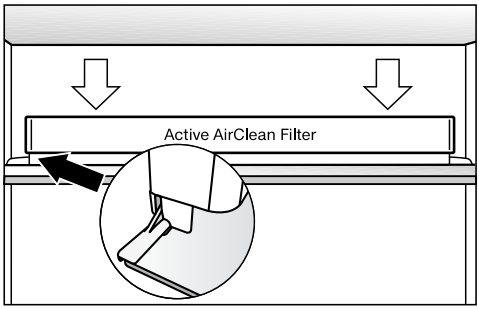

■ Refit the holder on the protective strip of the shelf you wish to use it on.

Accessories supplied

Egg tray

Bottle holder

Ice cube tray

Optional accessories

A range of useful Miele accessories and care products are available for your appliance.

Multi-purpose microfibre cloth

The microfibre cloth is suitable for removing fingerprints and light soiling from surfaces such as stainless steel, glass, plastic and chrome without the use of chemicals.

MicroCloth Kit

The MicroCloth Kit contains a universal cloth, a glass cloth and a polishing cloth.
These cloths are extremely resistant to tearing and very robust. Thanks to very fine microfibres these cloths achieve an excellent cleaning performance.

MicroCloth HyClean

The MicroCloth HyClean is a multi-purpose antibacterial cloth and is particularly tear resistant and durable. It can be used wet or dry, with or without cleaning agent.

KKF-FF charcoal filter with holder (Active AirClean)

Charcoal filters neutralise unpleasant odours in the fridge zone for improved air quality.

KKF-RF replacement charcoal filters (Active AirClean)

Replacement filters to the fit the holder are available. We recommend replacing the charcoal filters every 6 months.

Bottle rack

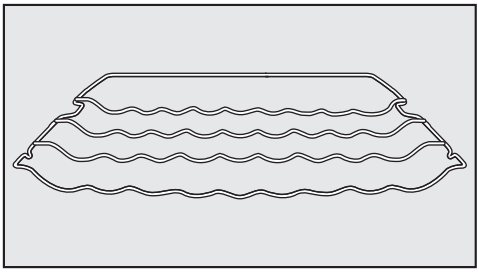

Bottles can be stored horizontally using the bottle rack to save space.
The bottle rack can be placed at different positions in the appliance.

Organisation box

The organisation box makes it easier to sort the food in the fridge zone drawer in a clear manner.

Depending on the model, you may need to remove the entire drawer to insert and remove the organisation box.

Optional accessories can be ordered from the Miele webshop. They can also be ordered from the Miele Customer Service Department (see end of this booklet for contact details) or from your Miele dealer.

Before using for the first time

- Remove all packaging material and protective film.
- Clean the inside of the appliance and the accessories (see “Cleaning and care”).

Connecting the refrigeration appliance

- Connect the refrigeration appliance to the electricity supply as described in “Electrical connection”.

Miele will then appear on the appliance display, followed by ⏻.

Switching the refrigeration appliance on

- Open the appliance door.
- Touch the *OK* sensor control on the control panel.

The refrigeration appliance will start to cool and the interior lighting will come on when the appliance door is opened.

When the set freezer temperature is reached, the symbol disappears, the temperature display of the freezer section lights up constantly and the alarm stops.

- If the alarm annoys you, tap *OK*.

The alarm will stop.

The appliance will gradually reach the pre-set temperatures.

To enable the temperature to get sufficiently cold inside the refrigeration appliance, allow the appliance to run for a few hours before placing food in it. Do not place food in the refrigeration appliance until it has reached the preset temperature.

Do not place food in the freezer zone until it has reached the preset temperature (min. -18 °C).

Switching the refrigeration appliance off

You can only switch the entire refrigeration appliance off in Settings mode ⚙.

- Touch the *OK* sensor control on the control panel.

will appear in the display (refrigerator section is selected).

- Use the < or > sensor control to scroll to the ⚙ symbol.
- Touch *OK*.
- Use the < or > sensor control to scroll to the ⏻ symbol.
- Touch *OK*.

The cooling and interior lighting are switched off.

⏻ will appear in the display.

Please note: the refrigeration appliance is not disconnected from the power supply when it is switched off.

Switching off the refrigerator section separately

The refrigerator section can be switched off without having to switch off the freezer section. This is useful, e.g. whilst on holiday.

- Touch the *OK* sensor control on the control panel.

will appear in the display (refrigerator section is selected).

- Touch *OK*.
- Use the < sensor control to scroll to the ⏻ symbol.
- Touch *OK*.

The temperature display for the refrigerator section will go out. ⏻ will appear in the display.

The refrigerator section is switched off.

The temperature display for the freezer section remains lit up.

Switching the refrigerator section back on again separately

- Touch *OK*.

will appear in the display (refrigerator section is selected).

- Touch *OK*.
- Use the > sensor control to scroll to the temperature you want and touch *OK*.

The refrigerator section switches back on.

Switching off for longer periods of time

If, during a long absence, the refrigeration appliance is switched off but not cleaned and the door is left shut, there is a danger of mould building up inside the appliance.
It is essential to clean the refrigeration appliance.

If the refrigeration appliance is not going to be used for a longer period of time, observe the following:

- Switch the refrigeration appliance off.
- Switch off at the wall and disconnect the plug from the socket, or disconnect the fuse.
- Clean the refrigeration appliance and leave the door ajar to air the appliance and avoid odours building up inside.

It is also advisable to carry out the last two instructions if you are switching the refrigerator section off for a longer period of time.

It is very important to set the correct temperature to ensure the shelf life of food. Reducing the temperature reduces the growth rate of microorganisms. Food does not spoil as quickly.

The temperature in the refrigeration appliance will rise:

- The more often the appliance door is opened and the longer it is kept open
- The more food that is stored in it
- The warmer the food is which is being put into it
- The higher the ambient temperature surrounding the refrigeration appliance. This refrigeration appliance is designed for use within specific ambient temperatures (climate range). Do not use in ambient temperatures for which it is not designed.

... in the refrigerator section

We recommend a temperature of **4 °C** in the refrigerator section.

... in the freezer zone

To freeze fresh food, a temperature of **-18 °C** is required. This will prolong the storage life of your food and retain its quality.

Temperature display

In normal operation, the temperature display shows the **current average refrigerator section temperature** and the **maximum freezer section temperature**.

Depending on the ambient temperature and the temperature setting, it can take the appliance a few hours to reach the temperature required and for this temperature to then be shown as a constant temperature on the display.

Setting the temperature in the refrigerator/freezer sections

- Touch the *OK* sensor control on the control panel.

will appear in the display (refrigerator section is selected).

- Use the < and > sensor controls to change the selected temperature zone if required.
- Touch *OK*.
- Use the < and > sensor controls to change the temperature.
- Touch *OK*.

The temperature display will then change back to the current temperature in the relevant temperature zone.

Possible temperature settings

- Refrigerator section: 2 to 9 °C
- Freezer section: -15 to -26 °C

If you change the temperature setting:

- check the temperature display after a few hours. It will take this long for the appliance to give an accurate reading.
  - Wait for approx. 6 hours if the refrigeration appliance is not very full
  - Wait for approx. 24 hours if the refrigeration appliance is full

If, after this time, the temperature is still too high or too low:

- Adjust the temperature again.

SuperCool ❄

When switched on, the SuperCool function ❄ can be used to rapidly reduce the temperature in the **fridge zone** to its lowest setting (depending on the ambient temperature). The refrigeration appliance will work at full power and lower the temperature. Select this function for the rapid chilling of large amounts of fresh food or drink.

When the SuperCool function ❄ is switched on, the appliance may make more noise than usual.

The SuperCool function ❄ should be switched on immediately before placing food or drinks in the fridge zone.

The SuperCool function ❄ will switch itself off automatically after approx. 12 hours. The refrigeration appliance will then run at normal power again.

Tip: To save energy, you can switch the SuperCool function ❄ off yourself once food and drinks are sufficiently chilled.

Switching SuperCool ❄ on and off

- Touch the *OK* sensor control on the control panel.

▮ will appear in the display (refrigerator section is selected).

- Touch *OK*.
- Use the < sensor control to scroll to the ❄ symbol.
- Touch *OK*.

When the SuperCool function ❄ is **switched on**, a dot appears in the upper corner of the display •.

- Use the > sensor control to scroll to the temperature you want and touch *OK*.

SuperFreeze ❄

When switched on, the SuperFreeze function ❄ can be used to rapidly reduce the temperature in the **freezer section** to its lowest setting (depending on the ambient temperature). The refrigeration appliance will work at full power and lower the temperature. Select this function before freezing fresh food. This helps food to freeze quickly and retain its nutrients, vitamins, flavours and appearance.

When the SuperFreeze function ❄ is switched on, the appliance may make more noise than usual.

SuperFreeze should be switched on approx. **6 hours before** placing food in the freezer section.
When freezing the **maximum amount of food**, the SuperFreeze function ❄ should be switched on **24 hours beforehand**.

The SuperFreeze function ❄ will switch itself off automatically after a maximum of 72 hours. The refrigeration appliance will then run at normal power again. The quantity of fresh food placed in the freezer will determine the duration before it switches off.

Tip: To save energy, you can switch the SuperFreeze function off yourself once food and drinks are sufficiently chilled.

You do not need to switch on the SuperFreeze function:

- If you are placing food that is already frozen in the freezer
- If you only freeze up to 2 kg of fresh food daily

Switching SuperFreeze ❄ on and off

- Touch the *OK* sensor control on the control panel.

▮ will appear in the display (refrigerator section is selected).

- Use the > sensor control to scroll to the ▮ symbol.
- Touch *OK*.
- Use the < sensor control to scroll to the ❄ symbol.
- Touch *OK*.

When the SuperFreeze function ❄ is **switched on**, a dot appears in the upper right-hand corner of the display •.

- Use the < and > sensor controls to scroll to the temperature you want and touch *OK*.

DynaCool

When the DynaCool function is not switched on, the natural circulation of air in the appliance will cause different temperature zones in the fridge zone, as the cold, heavy air will sink to the lowest section of the appliance. You should bear this in mind when placing food in the appliance (see “Storing food in the refrigerator section”). However, if you are storing a large amount of similar food in the refrigerator at any one time, e.g. after your weekly shop, it is a good idea to turn on DynaCool. This way you can distribute the temperature on all the adjustable shelves inside the appliance more evenly so that all the food in the fridge zone will be chilled to about the same degree.
The temperature is set as normal with the temperature control.

Also switch on the DynaCool function when:

- The ambient temperature is high (above approx. 35 °C)
- The humidity levels are high (e.g. in the summer)

The fan will always switch on automatically when the compressor switches on.

Tip: As the energy consumption increases when DynaCool is switched on, you should turn the DynaCool function off again under normal conditions.

To save energy, the fan switches off automatically whilst the door is open.

Switching DynaCool on and off

- Touch the *OK* sensor control on the control panel.

will appear in the display (refrigerator section is selected).

- Touch *OK*.
- Use the < sensor control to scroll to the symbol.
- Touch *OK*.

When the DynaCool function is **switched on**, a dot appears in the upper corner of the display •.

- Use the > sensor control to scroll to the temperature you want and touch *OK*.

Explanation of the different settings

Only the settings that require further explanation are described below.

The door alarm and other warnings are automatically suppressed when you are in Settings mode ⚙.

Party mode

The Party mode function is recommended if you wish to chill or freeze large amounts of fresh food or drink quickly.

Tip: Switch on the Party mode function approx. 4 hours before placing food and drinks in the appliance.

When Party mode is switched on, the DynaCool, SuperCool and SuperFreeze functions are switched on automatically.

Party mode cannot be switched on if the refrigerator section is switched off or if Holiday mode is switched on.

The Party mode function will switch itself off automatically after approx. 24 hours. However, you can switch the Party mode function off early at any time.

Holiday mode

The Holiday mode function is useful when you go on holiday, for example, if you do not wish to switch off the refrigerator section completely or do not need a high degree of cooling.

If Holiday mode is switched on, this will be indicated on the start display.

The refrigerator section is regulated to a temperature of 15 °C, remaining in operation whilst also saving energy.

The freezer section remains switched on at the previously set temperature.

Food which does not go off quickly can be stored in the refrigeration appliance for some time at this moderate refrigerator temperature. Energy consumption is lower than in normal operation.
This also prevents the build-up of odours and mould which can occur if the refrigerator section is switched off and the appliance door is closed.

⚠ Health risk caused by decomposing food.
The usability and quality of food in the fridge zone may deteriorate if the temperature remains above 4 °C for an extended period.
Only ever switch on the Holiday mode function for a limited period.
Do not store any temperature-sensitive food which goes off easily, such as fruit, vegetables, fish, meat and dairy products, during this time.

Switching the lock function 🔒/🔓 on

When the lock function 🔒 is switched on, it protects the refrigeration appliance from being switched off inadvertently and against unintentional adjustments by unauthorised persons such as children.

- In Settings mode ⚙, use the < or > sensor control to scroll to the 🔓 symbol.
- Touch *OK*.

When the lock function 🔒 is switched on, a dot appears in the upper corner of the display •.

- Close the appliance door. The lock function 🔒 is only activated now.

Deactivating the lock function 🔒/🔓 temporarily

If, for example, you want to adjust the temperature, you can briefly deactivate the lock function:

- Touch *OK*.

🔒 will appear in the display.

- Touch the *OK* sensor control for approx. 6 seconds.

🌡 will appear in the display (refrigerator section is selected).

- Use the < and > sensor controls to change the selected temperature zone if required.
- Touch *OK*.
- Now select the required settings.
- Touch *OK*.

Closing the appliance door will reactivate the lock function 🔒.

Switching the lock function 🔒/🔓 off completely

- Touch *OK*.

🔒 will appear in the display.

- Touch the *OK* sensor control for approx. 6 seconds.

🌡 will appear in the display (refrigerator section is selected).

- Use the < or > sensor control to scroll to the ⚙ symbol.
- Touch *OK*.
- Use the < or > sensor control to scroll to the 🔒 symbol.
- Touch *OK*.

When the lock function is switched off, 🔓 appears in the display.

Sabbath mode

The appliance offers a Sabbath programme for the purposes of religious observance.

If Sabbath mode is switched on, this will be indicated on the start display.

The display switches off after 3 seconds.

When Sabbath mode is switched on, you cannot make any settings on your refrigeration appliance.

Ensure that the appliance doors are properly closed, as visual and audible alarms are switched off.

The Sabbath mode function will switch off automatically after approx. 120 hours.

When Sabbath mode is switched on, the following are deactivated:

- Interior lighting when the door is opened
- All audible and visual signals
- Temperature display

All other functions switched on previously remain activated.

⚠ Health risk caused by decomposing food.

As power failures are not indicated while Sabbath mode is active, food may be exposed to increased temperatures for a certain period of time. This will reduce the storage life of the food.

If there is a power failure during Sabbath mode , check the quality of the food.

Switching Sabbath mode on

- In Settings mode, use the < or > sensor control to scroll to the symbol.
- Touch *OK*.

When the Sabbath mode function is switched on, a dot appears in the upper corner of the display •.

The display will go out after 3 seconds.

- Close the appliance door.

Switching Sabbath mode off

- Touch the *OK* sensor control.

will appear in the display.

- Touch *OK*.

When the Sabbath mode function is switched on, a dot appears in the upper corner of the display •.

- Touch *OK*.

When the Sabbath mode function is switched off, the dot in the upper corner of the display goes out.

Information on Sabbath mode

This product is certified by Star-K, an international institute for kosher certification.
You can find the Star-K certification version here.

Changing the time before the door alarm is triggered

You can set how quickly the door alarm sounds after the appliance door is opened.

- In Settings mode, use the < or > sensor control to scroll to the symbol.
- Touch *OK*.
- Use the < and > sensor controls to set the time you want between 30 seconds and 3 minutes: 30 seconds.
- Touch *OK*.

Adjusting the volume of alarms and buzzers

You can adjust the volume of alarms and buzzers (e.g. in the event of a door alarm or fault message). You can also switch off the alarms and buzzers if they disturb you.

- In Settings mode, use the < or > sensor control to scroll to the symbol.
- Touch *OK*.
- Use the < and > sensor controls to select the volume you want for alarms and buzzers.
- Touch *OK*.

appears in the display when the alarms and buzzers are switched off.

Selecting further settings

Adjusting the display brightness ☼

You can adjust the display brightness to suit the lighting conditions in the room.

- In Settings mode ⚙, use the < or > sensor control to scroll to the ☼ symbol.
- Touch *OK*.
- Use the < and > sensor controls to select the display brightness you want.
- Touch *OK*.

Switching off demo mode

Demo mode allows the refrigeration appliance to be presented by dealers without the cooling system being switched on. This setting is not needed for domestic use.

If demo mode has been switched on as a default setting, will show on the display when the refrigeration appliance is switched on.

- Touch the *OK* sensor control on the control panel.

Miele will appear initially in the display, followed by the start screen.

- Touch *OK*.
- In Settings mode ⚙, use the < or > sensor control to scroll to the symbol.
- Touch *OK*.

After demo mode has been switched off, the refrigeration appliance switches off and must be switched on again.

Resetting the settings to their default settings

All settings made on the refrigeration appliance will be reset to default settings (for settings, see “Guide to the appliance”).

- In Settings mode, use the < or > sensor control to scroll to the symbol.
- Touch *OK*.
- Use the > sensor control to scroll to the symbol.
- Touch *OK*.

The refrigeration appliance switches off and must be switched on again.

Information

Appliance data (model number and serial number) is shown on the display.

Tip: This data is important when reporting an appliance fault to the Miele Customer Service Department (see “Service”).

Charcoal filter change indicator

After inserting the charcoal filter (optional accessory), you must activate the charcoal filter change indicator in Settings mode.

The charcoal filter change indicator on the start display will remind you to replace the charcoal filter approx. every 6 months (see “Cleaning and care – Replacing the charcoal filters”).

Cleaning mode

Cleaning mode makes it easier to clean the fridge zone (see “Cleaning and care”). The interior lighting remains switched on, even though the fridge zone is switched off. The buzzer will stop and the symbols on the display will also go out.

If Cleaning mode is switched on, this will be indicated on the start display.

After cleaning, Cleaning mode must be switched off. If the appliance door is closed for more than 10 minutes, Cleaning mode switches itself off automatically.

⚠ Health risk caused by decomposing food.

If the temperature in the freezer remains above -18 °C for a long time, the frozen food can start to defrost. This will reduce the storage life of the food.

Check whether the frozen food has started to defrost. If it has, check that the food is safe to use and if it is, then use it as soon as possible or cook it before freezing it again.

Temperature alarm

The refrigeration appliance has been fitted with a warning system so that the temperature in the freezer zone cannot rise unnoticed.

If the temperature in the freezer section becomes too warm,  will light up red in the freezer section temperature display.
An alarm will also sound until the cause of the alarm is rectified or the alarm is switched off.

The temperature the refrigeration appliance is set at determines the temperature the appliance recognises as being too warm.

A temperature alarm is displayed before an existing door alarm.

The audible and visual signals may be activated in the following situations:

- You switch on the refrigeration appliance and the temperature in a temperature zone differs greatly from the set temperature.
- A lot of warm room air enters the freezer when you are rearranging or taking out frozen food.
- You are freezing large amounts of food at once.
- You are freezing warm food.
- There was a power cut.
- The refrigeration appliance has a fault.

Before you switch the temperature alarm off, you must determine the cause and rectify it.

If the alarm annoys you, it can be turned off early.

■ Touch *OK*.

The alarm message is confirmed:  goes out and the alarm stops.

The start screen appears in the display: the warmest temperature recorded in the freezer section will flash for about 1 minute in the display. Then the temperature display will change to the current temperature in the freezer section.

The alarm will stop. The symbol will go out when the temperature reaches the correct level again.

Door alarm

The refrigeration appliance is fitted with a warning system to avoid increased energy consumption and food becoming warm if the appliance door is left open.

If an appliance door is left open for a longer period of time,  will appear on the relevant temperature display. An alarm will also sound.

You can change the time before the door alarm is triggered. However, the door alarm can also be turned off (see “Selecting further settings”).

The alarm will stop and will go out on the display as soon as the door is closed.

Switching the door alarm off early

If the alarm disturbs you, it can be turned off early.

■ Touch *OK*.

The alarm will stop and the symbol will go out.

If the appliance door is not closed, the alarm repeats after 3 minutes.

⚠ Risk of explosion due to flammable mixes of gases.

Electrical components can cause flammable mixes of gases to ignite.

Do not store explosive materials in the refrigeration appliance or any products containing propellants (e.g. spray cans). The spray cans in question can be identified by the contents printed on the can or by a flame symbol. Electrical components can cause escaping gases to ignite.

⚠ Risk of damage due to greasy or oily foods.

If storing food which contains a lot of fat or oil in the refrigeration appliance or the appliance door, make sure that it does not come into contact with plastic components as this could cause stress cracks or break the plastic.

Make sure that no fat or oil leaks onto the plastic parts of the refrigeration appliance.

If there is insufficient air circulation, the cooling performance will decrease and energy consumption will increase.

To allow air to circulate efficiently, do not pack food too closely together in the appliance.

Do not cover the fan in the rear wall of the appliance.

Different storage zones

Due to natural air circulation, there are different temperature regions in the refrigerator section.

Cold, heavy air sinks to the lowest section of the refrigeration section. Make use of the different zones when placing food in the appliance.

This refrigeration appliance has dynamic cooling, which helps to keep an even temperature when the fan is running. The difference between the various temperature zones is therefore less pronounced.

Warmest area

The warmest area in the refrigerator section is at the top in the front area and in the door. Use this for storing butter and cheese.

Coldest area

The coldest area in the fridge zone is directly above the DailyFresh drawer and at the back of the appliance.

A temperature setting of 4 °C combined with appropriate hygiene measures delays the propagation of bacteria, e.g. salmonella and listeria, which can lead to serious food poisoning.

Therefore, you should use these areas to store all delicate and highly perishable food, including:

- Fish, meat, poultry
- Cold cuts, ready meals
- Dishes or baked goods containing eggs or cream
- Fresh dough, cake mixtures, pizza or quiche dough
- Raw milk cheese and other raw milk products
- Pre-packed vegetables
- Other fresh food (with a label stating it should be kept at a temperature of approx. 4 °C)

Tip: Store food in such a way that it does not touch the rear wall of the fridge zone. Otherwise it could freeze to the rear wall.

Food which is not suitable for storage in the refrigerator section

Not all food is suitable for refrigeration at temperatures below 5 °C, because it may be sensitive to cold. Depending on the type of food, the appearance, consistency, flavour and/or vitamin content may be altered if stored at too cold a temperature.

Food which is sensitive to cold includes:

- Pineapples, avocados, bananas, pomegranates, mangoes, melons, papayas, passionfruit, citrus fruit such as lemons, oranges, mandarins, grapefruit
- Fruit (which is not yet ripe)
- Aubergines, cucumbers, potatoes, peppers, tomatoes, courgettes
- Hard cheeses (e.g. Parmesan, mountain cheese)

Notes on buying food

The freshness of the food when it is first placed in the appliance is the most important factor for how long it stays fresh.
Take into account the use-by date and the correct storage temperature.
Time out of the refrigerator, e.g. transporting food in a warm car, should be kept to a minimum.

Storing food in the fridge zone

Storing food correctly

Ensure that food stored in the fridge zone is in packaging or covered properly (some exceptions apply in the DailyFresh drawer).
This will prevent food odours from affecting other food, stop food from drying out and also prevent any cross-contamination of bacteria. This is particularly important when storing meat products. Make sure that food such as raw meat and fish in particular does not come into contact with other food.

By ensuring that the temperature settings are correct and by taking appropriate hygiene measures, you can prolong the storage life of your food considerably. This prevents food waste.

Protein-rich food

Please note that food rich in protein deteriorates faster than other types of food. Shellfish, for example, deteriorates faster than fish, and fish deteriorates faster than meat.

The DailyFresh drawer provides good storage conditions for fruit and vegetables.

The humidity level in the DailyFresh drawer can also be regulated to suit the food being stored. Food retains its own moisture if stored at a higher humidity and so does not dry out as quickly. The temperature is approximately equivalent to the temperature in the fridge zone.

Remember that the fresher the food when placed in the appliance, the longer it will stay fresh.

Adjusting the humidity level in the DailyFresh drawer for fruit and vegetables

The moisture level greatly depends on the type and quantity of food being stored, if stored unwrapped.
If the quantity of food being stored in this compartment is small, the humidity level may be too low.

Tip: If you are only storing a small amount of food, wrap it in airtight packaging.

Selecting low humidity ◊

The appliance is delivered with increased humidity and the compartment cover pushed backwards ◊◊◊.

Only change this position if the DailyFresh drawer is excessively humid:

- Open the DailyFresh drawer.

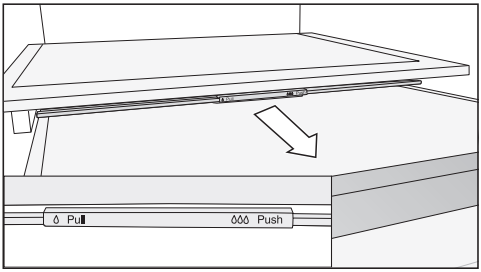

- Pull the compartment cover forwards as far as it will go.

The compartment cover is open and the humidity drops ◊.

Selecting increased humidity ◊◊◊

- Open the DailyFresh drawer.

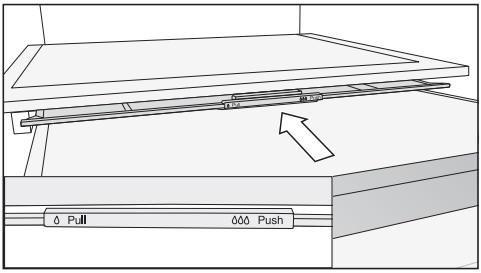

- Slide the compartment cover backwards as far as it will go.

The compartment cover is closed and the humidity remains in the compartment ◊◊◊.

Storing food in the DailyFresh drawer

Observe the following tips if you find that food you have stored does not keep well (e.g. food becomes limp or wilts after only being stored for a short time):

- Only place fresh food in the appliance. The initial condition of the food is crucial to maintaining freshness.
- Clean the DailyFresh drawer before storing food in it.
- Very wet food should be dried off before storing it.
- Do not store food which is sensitive to cold in the DailyFresh drawer (see “Storing food in the fridge zone – Food which is not suitable for storage in the fridge zone”).
- Set the compartment cover to the correct position for the food being stored (humidity not increased ◊ or humidity increased ◊◊◊).
- An increased humidity level ◊◊◊ in the humidity-controlled compartment is achieved with the moisture present in the food being stored if it is stored unwrapped. The more food stored in the compartment, the higher the humidity.
- If too much moisture collects in the compartment at the ◊◊◊ setting and the food is affected, dry the floor and place a rack or similar item in the compartment so that excess moisture can drip down. Alternatively, reduce the humidity ◊ by pulling the compartment cover forwards.
- If the humidity level is too low despite the ◊◊◊ setting, wrap the food in airtight packaging.

Freezing fresh food

⚠ Health risk caused by decomposing food.

If the temperature in the freezer remains above -18 °C for a long time, the frozen food can start to defrost. This will reduce the storage life of the food.

Check whether the frozen food has started to defrost. If it has, check that the food is safe to use and if it is, then use it as soon as possible or cook it before freezing it again.

Fresh food should be frozen as quickly as possible. This way the nutritional value of the food, its vitamin content, appearance and taste are not impaired.

If food is frozen quickly, the cells have less time to lose moisture, so they shrink significantly less. As there is not so much moisture loss, it is easier for the food to reabsorb it during the defrosting process, and very little water collects around the defrosted food.

Maximum freezing capacity

To ensure that fresh food placed in the freezer freezes through to the core as quickly as possible, the maximum freezing capacity must not be exceeded. The maximum freezing capacity for freezing within a 24-hour period is given on the data plate: “Freezing capacity ... kg/24 hrs”.

Storing frozen food

When buying frozen food to store in your freezer, check:

- That the packaging is not damaged
- The use-by date
- That the temperature at which the frozen food is being stored in the shop is -18 °C or colder

■ Where possible, transport frozen food in an insulated bag and then store it quickly in the refrigeration appliance.

Home freezing

Before placing food in the freezer

- When freezing more than 2 kg of fresh food, switch on the SuperFreeze function ❄ for 6 hours before placing the food in the freezer.
- When freezing even larger amounts of food, switch on the SuperFreeze function ❄ for 24 hours before placing the food in the freezer.

This helps the frozen food which is already stored in the freezer to stay frozen.

- Only freeze fresh food which is in a good condition.

Please note that some food is not suitable for freezing. These include, for example, vegetables that are usually eaten raw, such as lettuce or radishes.

Tip: To retain colour, taste, aroma and vitamin C, vegetables should be blanched before they are frozen. To do so, place vegetables portion by portion into boiling water for 2–3 minutes. Then remove and plunge the vegetables into ice-cold water to cool quickly. Leave the vegetables to drain.

Packaging food for freezing

- Freeze food in portions.

Tip: Use suitable packaging to avoid freezer burn (such as freezer containers).

- Expel as much air as possible from the packaging and close it tightly.
- Make a note of the contents and the date of freezing on the packaging.

Placing frozen food in the freezer

⚠ Risk of damage caused by loading too much food.
Loading food which is too heavy can cause damage to the freezer drawers/glass shelves.
Do not exceed the relevant maximum load size:
Freezer drawer = 15 kg
Glass shelf = 35 kg

Unfrozen food should not touch frozen food as this will cause the frozen food to begin to thaw.

- To prevent food sticking together when frozen, make sure that the packaging and containers are dry.

To ensure that food freezes through to the core quickly, do not exceed the following packaging and container sizes:

- Fruit and vegetables: max. 1 kg
- Meat: max. 2.5 kg

– Freezing small amounts of food

Place the food in the upper freezer drawers.

- Place the food flat in the bottom of the **upper** freezer drawers so that it freezes through to the core as quickly as possible.

– VarioRoom: freezing the maximum amount of food (see data plate)

If the ventilation slots are blocked, the cooling performance will decrease and energy consumption will increase.
When placing food in the freezer, make sure that the ventilation slots are not blocked.

Tip: You can expand the space available in the freezer section. If you wish to freeze large frozen food such as a turkey or game, the glass shelves between the freezer drawers can be removed.

- Remove the upper freezer drawers.
- Place the food flat on the upper glass shelves so that it freezes through to the core as quickly as possible.

Once frozen:

- Switch the SuperFreeze function ❄ off.
- Place the frozen food in the freezer drawers and push them back in.

Storage time for frozen food

Food group	Storage time (Months)
Ice cream	2 to 6
Bread, baked goods	2 to 6
Cheese	2 to 4
Fish, oily	1 to 2
Fish, lean	1 to 5
Sausage, ham	1 to 3
Game, pork	1 to 12
Poultry, beef	2 to 10
Vegetables, fruit	6 to 18
Herbs	6 to 10

The storage times given are guidelines only.

For standard freezing results, follow the advice on packaging.

By keeping the freezer zone at a constant temperature of -18 °C and taking appropriate hygiene measures you can maximise the storage life of your food and avoid food waste.

Cooling drinks quickly

To cool drinks quickly in the refrigerator section, switch on the SuperCool function ❄.

If you want to cool a large amount of drinks, or if you want to cool drinks in the freezer section, select Party mode in Settings mode ⚙.

When cooling drinks quickly in the freezer, make sure bottles are not left in for **more than one hour**. Otherwise they could burst.

Using accessories

Making ice cubes

- Fill the ice cube tray 3/4 full with water and place it on the bottom of one of the freezer drawers.
- Once frozen, use a blunt instrument, for example a spoon handle, to remove the ice cube tray from the freezer if it is stuck.

Tip: Ice cubes can be removed easily from the tray by twisting the tray gently or by holding it under cold running water for a short time.

Refrigerator section and DailyFresh drawer

The refrigerator section and the DailyFresh drawer defrost automatically.

Condensate and frost can build up on the back wall of the refrigerator section whilst the compressor is running. You do not need to remove this.

The condensate drains through a channel and drain hole into an evaporation system at the back of the refrigeration appliance. The warmth generated by the compressor causes the condensate to evaporate automatically.

Keep the condensate channel and drain hole clean to enable this. Condensate must be able to drain away unhindered at all times.

Freezer zone

The appliance is equipped with a “NoFrost” system. The refrigeration appliance defrosts automatically.

The moisture generated in the appliance collects on the condenser and is automatically defrosted and dissipated from time to time.

This automatic defrosting system enables the freezer to remain permanently ice-free. Food stored in the freezer will not defrost with this system.

The data plate located inside the interior cabinet of the refrigeration appliance must not be removed. It contains information which is required in the event of a fault.

Do not let water get into the electronic unit or the lighting.

⚠ Risk of damage due to moisture ingress.
The steam from a steam cleaner can damage plastic and electrical components.
Do not use a steam cleaner to clean the refrigeration appliance.

Cleaning water must not get into the drain hole.

Cleaning agents

Cleaning and conditioning agents used in the interior cabinet of the refrigeration appliance must be food safe.

To avoid damaging the surfaces of the appliance, **do not use the following:**

- Cleaning agents containing soda, ammonia, acids or chlorides
- Cleaning agents containing descaling agents
- Abrasive cleaning agents (e.g. scouring powder, scouring liquid or pumice stones)
- Cleaning agents containing solvents
- Stainless steel cleaners
- Dishwasher cleaner
- Oven sprays
- Glass cleaning agents
- Hard, abrasive sponges and brushes (e.g. pot scourers)
- Eraser stain remover blocks
- Sharp metal scrapers

We recommend using a clean sponge and lukewarm water with a little washing-up liquid to clean the surfaces of the appliance.

Preparing the refrigeration appliance for cleaning

Cleaning the refrigerator section only:

Switch Cleaning mode on. The cooling system in the refrigerator section is switched off, but the interior lighting remains switched on.

- In Settings mode, use the < or > sensor control to scroll to the symbol.
- Touch *OK*.

When Cleaning mode is switched on, a dot appears in the upper corner of the display •.

If Cleaning mode is switched on, this will be indicated on the start display.

- Take any food out of the refrigerator section and store it in a cool place.
- Take out any removable accessories for cleaning (see “Removing, dismantling and cleaning accessories”).

Cleaning the freezer section/the entire refrigeration appliance:

- Switch the refrigeration appliance off.

⏻ appears in the display and the cooling system is switched off.

- Take any food out of the freezer section/refrigeration appliance and store it in a cool place.
- Take out any removable accessories for cleaning (see “Removing, dismantling and cleaning accessories”).

Cleaning the inside of the appliance

The refrigeration appliance should be cleaned regularly (at least once a month).

If soiling is left on for any length of time, it may become impossible to remove under certain circumstances.
Surfaces may suffer discolouration or damage.
It is therefore best to remove any soiling immediately.

- Clean the **interior** with a clean sponge, lukewarm water and a little washing-up liquid.
- After cleaning, wipe with clean water and dry with a soft cloth.
- Clean the condensate channel and drain hole frequently using a cotton swab or similar item to ensure that condensate can drain away freely.
- Leave the door open to air the refrigeration appliance sufficiently for a short while and to prevent odour build-up.

Cleaning accessories by hand or in the dishwasher

The following components must be cleaned **by hand** only:

- The stainless steel trim
- Adjustable shelf with printing
- All drawers and compartment lids (these vary depending on model)
- The flexible bottle rack (available as an optional accessory)
- Organisation box (available as an optional accessory)

The following components are **dishwasher-safe**:

⚠ Risk of damage due to high dishwasher temperatures.
Parts of the refrigeration appliance may become unusable, e.g. deform, if they are washed in the dishwasher at more than 55 °C.
For dishwasher-safe components, always select dishwasher programmes with a maximum temperature of 55 °C.

Contact with natural dyes from carrots, tomatoes and ketchup, etc., may discolour the plastic parts in the dishwasher. This discolouration does not affect the stability of the parts.

- The bottle holder, egg tray, ice cube tray
- The door and bottle shelves in the appliance door (without stainless steel trim)

- Adjustable shelves (without the trim or printing)
- The glass shelves (without protective trims)
- Organisation box (available as an optional accessory)
- The holder for the charcoal filter (available as an optional accessory)

Removing and dismantling accessories for cleaning

Dismantling the door shelf/bottle shelf

Remove the stainless steel trim before cleaning the door shelf/bottle shelf in the dishwasher.

To remove the stainless steel trim, proceed as follows:

- Place the door shelf/bottle shelf on the worktop.
- Pull the trim off the shelf beginning at one side.
- After cleaning the door shelf/bottle shelf, reattach the trim.

Dismantling an adjustable shelf

Before cleaning the shelf remove the plastic trim and protective strip at the back of the shelf as follows:

- Place the shelf on a worktop covered with a soft material (e.g. on a tea towel).

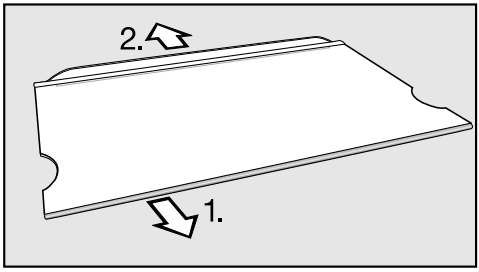

- First pull the plastic trim off, starting from one side.
- Then pull the protective strip off.
- After cleaning the shelf reattach the plastic trim and the protective strip.

Removing a drawer

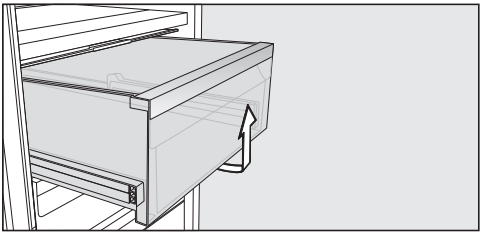

- Pull the drawer forwards and out.
- After cleaning, slide the drawer back in again.

Removing the dividing plate

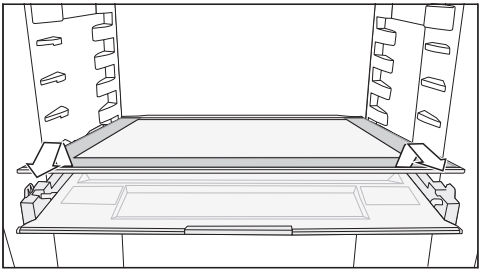

- Remove the dividing plate.
- After cleaning, slide the dividing plate back in again.

Removing the compartment cover

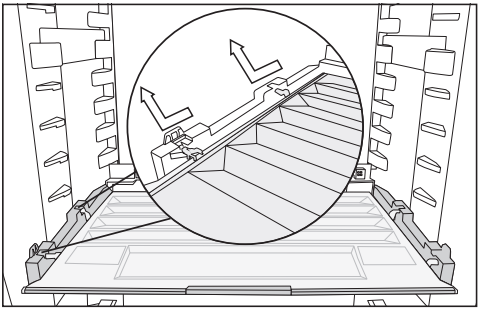

- Lift the cover at the front and pull it out.
- After cleaning, slide the compartment cover back in again.

Removing the drawers and glass shelves from the freezer section

- Pull the drawer forwards a little and out.
- Pull the glass shelf forwards a little and out.

Inserting the glass shelves and drawers into the freezer section

- Place the glass shelf on the guide rails at an angle.
- Push in and lower the glass shelf.
- Place the drawer on the guide rails at an angle.
- Push in and lower the drawer.

Replacing the charcoal filters (optional accessory)

Replace the charcoal filters in the holder every 6 months.

The ⊛ symbol in the start display reminds you to replace the charcoal filter.

Replacement KKF-RF charcoal filters can be obtained from the Miele Customer Service Department, from your dealer or from Miele's website.

- Pull the charcoal filter holder upwards to remove it from the adjustable shelf.

When in position, the charcoal filters must not touch the rear wall of the refrigeration appliance as the moisture could cause them to stick to it.

Insert the new charcoal filters deep enough in the holder to ensure that they do not protrude over the edge of the holder.

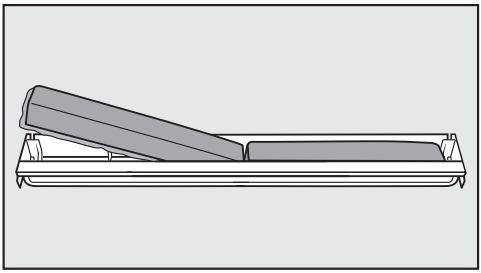

- Remove both charcoal filters and place the new filters with the surrounding edge pointing downwards in the holder.

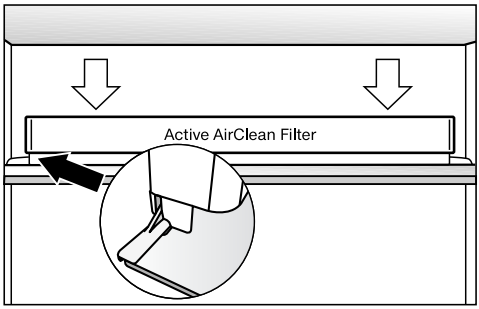

- Place the holder in the middle of the rear protective strip of any adjustable shelf, so that it clicks into position.
- Touch the *OK* sensor control to confirm that the filters have been replaced.

The "Replace charcoal filter" reminder will go out on the display and the counter will be reset.

The ⊛ symbol will go out on the start display.

Cleaning the front of the appliance and the side panels

If soiling is left on for any length of time, it may become impossible to remove. Surfaces may suffer discolouration or damage.
Therefore, it is best to remove soiling from the appliance front and side panels immediately.

All surfaces are susceptible to scratching. Contact with unsuitable cleaning agents can alter or discolour the surfaces.
See the information on “Cleaning agents” at the beginning of this section.

- Clean the surfaces with a clean sponge and a solution of warm water and washing-up liquid. A clean, damp microfibre cloth without cleaning agent can also be used.
- After cleaning, wipe with clean water and dry with a soft cloth.

Cleaning the door seal

⚠ Risk of damage as a result of incorrect cleaning.
If you treat the door seal with oils or grease, it can become porous.
Do not use any oils or grease on the door seal.

- The door seal should be cleaned regularly with clean water, and then wiped dry with a soft cloth.

Cleaning the ventilation gaps

A build-up of dust will increase the energy consumption of the appliance.

- The ventilation gaps should be cleaned on a regular basis with a brush or vacuum cleaner (you could use a Miele vacuum cleaner dusting brush, for example).

After cleaning

- Replace all shelves and accessories in the refrigeration appliance.
- Switch the refrigeration appliance back on, if necessary.
- If you have activated the refrigerator section's Cleaning mode : Touch the *OK* sensor control on the control panel.

will appear in the display.

- Touch *OK*.

When Cleaning mode is switched off, the dot in the upper corner of the display disappears.

- Use the < and > sensor controls to scroll to the ⮌ symbol and touch *OK*.

The refrigerator section will start cooling again.

- Switch the SuperFreeze function on for a while so that the freezer section can cool down quickly.
- Switch on the SuperCool function for a while so that the refrigerator section can cool down quickly.
- Place food in the refrigerator section.
- Once the freezer has reached the required temperature, place the frozen food back in the freezer drawers and put them back in the freezer.
- Switch the SuperFreeze function off as soon as the temperature in the freezer is a constant -18 °C or colder.
- Close the appliance doors.

Problem solving guide

Many malfunctions and faults that can occur in daily operation can be easily remedied. You can save time and money in many cases, as you do not need to call the Miele Customer Service Department.

Information to help you rectify faults yourself can be found at www.miele.com/service.

The following tables are designed to help you to find the cause of a malfunction or a fault and to resolve it.

To prevent unnecessary loss of temperature it is advisable not to open the door while waiting for the appliance to be serviced.

Problem	Cause and remedy
The refrigeration appliance is not getting cold and the interior lighting does not come on when the appliance door is opened.	The refrigeration appliance is not switched on and the ⏻ symbol is lit up on the display. ■ Switch the refrigeration appliance on.
	The plug is not inserted in the socket correctly. ■ Insert the plug into the socket. If the refrigeration appliance is switched off, ⏻ will appear on the display.
	The mains fuse has tripped. There could be a fault with the refrigeration appliance, the household electrical wiring or another electrical appliance. ■ Contact a qualified electrician or the Miele Customer Service Department.
The compressor runs continuously.	This is not a fault. To save energy, the compressor runs at a lower speed, but for longer, when less cooling is required.
The compressor is switching on more frequently and for longer periods of time. The temperature in the refrigeration appliance is too low.	The ventilation gaps have been covered or become too dusty. ■ Do not block the ventilation gaps. ■ Dust the ventilation gaps regularly.
	The appliance doors have been opened too frequently, or a large amount of fresh food has been put in all at once for storage or freezing. ■ Only open the appliance doors when necessary and for as short a time as possible.

Problem	Cause and remedy
	After a while, the temperature will return to normal by itself.
	The appliance doors are not closed properly. A thick layer of ice may have formed in the freezer section. ■ Close the appliance doors. After a while, the temperature will return to normal by itself. If a thick layer of ice has already formed, this will affect cooling and increase energy consumption. ■ Defrost the refrigeration appliance and clean it.
	The ambient temperature is too high. The higher the ambient temperature, the longer the compressor runs. ■ See the information in “Installation – Installation site”.
	The refrigeration appliance was not properly installed in the niche. ■ Install the refrigeration appliance in the niche as described in the installation instructions supplied with it.
	The temperature setting in the refrigeration appliance is too low. ■ Correct the temperature setting.
	A large amount of food is being frozen at once. ■ See “Freezing and storing food”.
	The SuperCool function ❄ is still switched on. ■ Switch off the SuperCool function ❄ earlier to save energy.
	The SuperFreeze function ❄ is still switched on. ■ Switch off the SuperFreeze function ❄ earlier to save energy.

Problem solving guide

Problem	Cause and remedy
The compressor comes on less and less often and for shorter periods of time. The temperature in the refrigeration appliance rises.	This is not a fault. The temperature setting is too high. ■ Correct the temperature setting. ■ Check the temperature again after 24 hours.
	The frozen food begins to defrost. The ambient temperature is too low for this refrigeration appliance. If the ambient temperature is too low, the compressor will run less frequently. This may cause the freezer section to become too warm. ■ See the information in “Installation – Installation site”. ■ Increase the ambient temperature.
Ice or condensation has built up inside the refrigeration appliance. The appliance door may not close correctly.	The door seal has come out of its groove. ■ Check that the door seal is correctly positioned in the groove.
	The door seal is damaged. ■ Check whether the door seal is damaged.
The door seal is damaged or needs to be replaced.	No tools are required to change the door seal. ■ Change the door seal. A replacement is available from Miele or from specialist retailers.

Other problems

Problem	Cause and remedy
The floor of the refrigerator section is wet.	The condensate drain hole is blocked. ■ Clean the condensate channel and drain hole.
Food has frozen together.	The food packaging was not dry when placed in the freezer. ■ Use a blunt instrument, e.g. a spoon handle or plastic scraper, to prise it apart carefully.
There is no audible alarm even though the appliance door has been open for a long time.	This is not a fault. The alarm was switched off in Settings mode. If you want to switch the audible alarm back on: ■ In Settings mode ⚙, use the < or > sensor control to scroll to the 🔊 symbol. ■ Touch *OK*. ■ Use the < and > sensor controls to select the volume you want for alarms and buzzers. ■ Touch *OK*. 🔊 appears in the display when the alarms and buzzers are switched on.

Display warnings

Message	Cause and remedy
lights up on the display, the refrigeration appliance does not get cold even though the controls and the interior lighting are working.	Demo mode has been activated. ■ Touch *OK*. Miele will appear initially in the display, followed by the start screen. ■ Touch *OK*. ■ In Settings mode ⚙, use the < or > sensor control to scroll to the symbol. ■ Touch *OK*. After demo mode has been switched off, the refrigeration appliance switches off and must be switched on again.
is lit up on the display and the refrigeration appliance cannot be used.	The Cleaning mode function is still switched on. ■ Touch the *OK* sensor control on the control panel to switch off Cleaning mode. will appear in the display. ■ Touch *OK*. When Cleaning mode is switched off, the dot in the upper corner of the display goes out. ■ Use the < or > sensor control to scroll to the ⮌ symbol and touch *OK*. The refrigeration appliance will start cooling again.
Nothing is visible on the display. The display is completely blank.	Sabbath mode is switched on: the interior lighting is switched off and the refrigeration appliance is cooling down. ■ Touch *OK*. will appear in the display. ■ Touch *OK*. When the Sabbath mode function is switched on, a dot appears in the upper corner of the display •. ■ Touch *OK*. When the Sabbath mode function is switched off, the dot in the upper corner of the display goes out.

Message	Cause and remedy
is lit up on the display and the appliance cannot be used.	The lock function has been activated. ■ Unlock the refrigeration appliance temporarily or switch the lock function off completely (see “Selecting further settings – Deactivating the lock function / temporarily/switching off completely”).
The symbol lights up in the start display and a buzzer sounds.	The charcoal filter replacement indicator in the start display reminds you to replace the charcoal filter. ■ Replace the charcoal filter in the holder (see “Cleaning and care – Replacing the charcoal filters (optional accessory)”) and confirm that the charcoal filter has been replaced by touching the *OK* sensor control. The symbol will go out on the start display.
lights up yellow in one of the temperature displays and an alarm also sounds.	The **door alarm** has been activated. ■ Touch *OK*. The alarm tone will stop and the symbol will go out. ■ Close the relevant appliance door.

Message	Cause and remedy
lights up in the freezer section temperature display and an alarm also sounds.	The **temperature alarm** has been activated; the temperature in the freezer section has risen higher or fallen lower than the temperature set. Possible reasons for this include: – The appliance door has been opened too frequently. – A large quantity of fresh food has been placed in the freezer without switching on the Super-Freeze function. – A prolonged power cut (mains outage) has occurred. – The refrigeration appliance has a fault. ■ Touch *OK*. The alarm message is confirmed: goes out and the alarm stops. The warmest temperature recorded in the freezer section will flash for about 1 minute in the display. Then the temperature display will change to the current temperature in the freezer section. You can exit from the flashing temperature display early: ■ Touch *OK*. The warmest temperature displayed will disappear. The display will then revert to showing the current temperature in the freezer. ■ Rectify the cause of the alarm. ■ Depending on the temperature displayed, you should check whether food in the freezer has started to thaw or has defrosted. If it has, it should be used as soon as possible. Defrosted food may only be re-frozen after it has been cooked.

Message	Cause and remedy
-F⚠ lights up in the display and an alarm also sounds.	Indication of an interruption to the power supply: the temperature in the freezer section over the last few days or hours has risen too high because of a power cut or interruption to the power supply. ■ Touch *OK*. The fault message is confirmed: -F⚠ goes out and the alarm will stop. The warmest temperature recorded in the freezer section will flash for about 1 minute in the temperature display for the freezer section. Then the temperature display will change to the current temperature in the freezer section. You can exit from the flashing temperature display early: ■ Touch *OK*. The warmest temperature displayed will disappear. The display will then revert to showing the current temperature in the freezer. The appliance will go back to the last temperature setting when the power is back on. ■ Rectify the cause of the alarm. ■ Depending on the temperature displayed, you should check whether food in the freezer has started to thaw or has defrosted. If it has, it should be used as soon as possible. Defrosted food may only be re-frozen after it has been cooked.

Problem solving guide

Message	Cause and remedy
⚠ **lights up in the display and a fault code F with numbers may appear. An alarm will also sound.**	There is a fault. ■ Switch the alarm off by touching *OK*. ■ Call the Miele Customer Service Department. To report the fault, you need the fault code and also the model designation and serial number of your refrigeration appliance. You can access this information ℹ in the display: ■ Touch *OK*. The appliance data required will be shown on the display. ■ Touch *OK*. ■ To switch off the refrigeration appliance, use the < or > sensor control to scroll to the ⏻ symbol. ■ To exit the information display, use the < or > sensor control to scroll to the ⮌ symbol. ■ Touch *OK*.
	There is an appliance fault: this display always has priority over any settings which have just been selected. An appliance fault has priority over any current door and/or temperature alarms displayed.

The interior lighting is not working

⚠ Risk of electric shock due to exposed, live electrical components.
When removing the lighting cover, there is a risk of coming into contact with live electrical components.
Do not remove the lighting cover. The LED lighting may only be repaired or replaced by the Miele Customer Service Department.

⚠ Risk of injury from LED lighting.
This lighting corresponds to risk group RG 2. If the cover is defective, there is a risk of eye injury.
If the lighting cover is defective, do not look from a close range directly into the lighting with optical instruments (e.g. magnifying glass or similar).

Problem	Cause and remedy
The interior lighting is not working.	The refrigeration appliance has not been switched on. ■ Switch the refrigeration appliance on.
	Sabbath mode is switched on: the display is dark and the refrigeration appliance is cooling. ■ Touch *OK*. will appear in the display. ■ Touch *OK*. When the Sabbath mode function is switched on, a dot appears in the upper corner of the display •. ■ Touch *OK*. When the Sabbath mode function is switched off, the dot in the upper corner of the display goes out.
	To avoid overheating, the lighting switches itself off automatically after approx. 15 minutes if the appliance door is left open. If this is not the case, then there is a fault. ■ Call the Miele Customer Service Department.

Noises

The refrigeration appliance is producing various noises during operation.
If the cooling performance is low, the refrigeration appliance will conserve energy but operate for longer. The volume will be lower.
Food will be chilled faster if the cooling performance is high.
The volume will be higher.

Normal noises	What is causing them?
Brrrrr ...	A humming noise is made by the compressor. This noise can get louder for brief periods when the compressor switches on.
Blubb, blubb ...	A gurgling noise can be heard when the refrigerant circulates through the pipes.
Click ...	Clicking sounds occur whenever the thermostat switches the compressor on or off.
Sssrrrrr ...	You can sometimes just hear the sound of the fan inside the appliance.
Crack ...	A cracking sound can be heard when materials expand inside the refrigeration appliance.
Please bear in mind that a certain amount of noise is unavoidable (from the compressor and the refrigerant circulating through the cooling circuit).	

Noises	Cause and remedy
Rattling, vibrating	The refrigeration appliance is uneven. Realign the appliance using a spirit level by raising or lowering the adjustable feet underneath the refrigeration appliance.
	The refrigeration appliance is touching another appliance or piece of furniture. Move it away.
	Drawers, baskets or shelves are jiggling or are stuck. Check all removable items and refit them correctly.
	Bottles or containers are touching. Separate them.

Information to help you rectify faults yourself and about Miele spare parts can be found at www.miele.com/service.

Contact in the event of a fault

In the event of any faults which you cannot remedy yourself, please contact your Miele dealer or the Miele Customer Service Department.

You can book a Miele Customer Service Department call-out online at www.miele.com/service.

Contact information for the Miele Customer Service Department can be found at the end of this document.

Please quote the model identifier and serial number of your appliance (Fabr./SN/Nr.) when contacting the Miele Customer Service Department. This information can be found on the data plate.

Please note that telephone calls may be monitored and recorded for training purposes and that a call-out charge will be applied to service visits where the problem could have been resolved as described in this booklet.

The data plate can be found in the interior cabinet of the refrigeration appliance.

Displaying appliance information

This can be found in Settings mode under Information ℹ (see “Selecting further settings”) or on the data plate inside the refrigeration appliance.

EPREL database

Since 1 March 2021, information on energy labelling and ecodesign requirements has been available in the European Product Database (EPREL). You can find the product database at the following link https://eprel.ec.europa.eu/. You will be asked to enter the model identifier.

The model identifier can be found on the data plate.

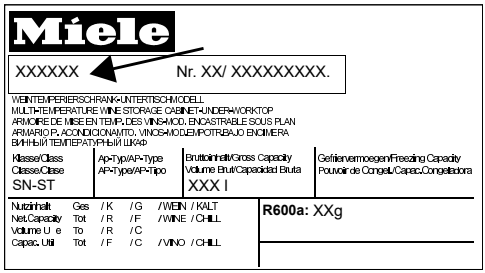

Warranty

The appliance warranty is valid for 2 years from date of purchase. In the UK, you must activate your cover by calling 0330 160 6640 or registering online at www.miele.co.uk.

For more information on country-specific warranty terms and conditions, please contact Miele Customer Service.

EU Conformity declaration

Miele hereby declares that this fridge-freezer complies with Directive 2014/53/EU.

The complete text of the EU declaration of conformity is available from one of the following internet addresses:

- Products, Download from www.miele.ie
- For service, information, operating instructions etc: go to www.miele.ie/domestic/customer-information-385.htm and enter the name of the product or the serial number

Frequency band of the WiFi module	2.4000 GHz – 2.4835 GHz
Maximum transmitting power of the WiFi module	< 100 mW

Miele hereby declares that this fridge-freezer complies with UK Radio Equipment Regulations 2017, as amended.

The complete text of the UK declaration of conformity is available from one of the following internet addresses:

- Products, Download from www.miele.co.uk
- For service, information, operating instructions etc: go to www.miele.co.uk and enter the name of the product or the serial number

Frequency band of the WiFi module	2.4000 GHz – 2.4835 GHz
Maximum transmitting power of the WiFi module	< 100 mW

United Kingdom
Miele Co. Ltd., Fairacres, Marcham Road, Abingdon, Oxon, OX14 1TW
Tel: 0330 160 6600, Internet: www.miele.co.uk/service, E-mail: info@miele.co.uk

Australia
Miele Australia Pty. Ltd.
ACN 005 635 398
ABN 96 005 635 398
Level 4, 141 Camberwell Road
Hawthorn East, VIC 3123
Tel: 1300 464 353
Internet: www.miele.com.au

China Mainland
Miele Electrical Appliances Co., Ltd.
1-3 Floor, No. 82 Shi Men Yi Road
Jing' an District
200040 Shanghai, PRC
Tel: +86 21 6157 3500
Fax: +86 21 6157 3511
E-mail: info@miele.cn,
Internet: www.miele.cn

Hong Kong, China
Miele (Hong Kong) Ltd.
41/F - 4101, Manhattan Place
23 Wang Tai Road
Kowloon Bay, Hong Kong
Tel: (852) 2610 1025
Fax: (852) 3579 1404
Email:
customerservices@miele.com.hk
Website: www.miele.hk

India
Miele India Pvt. Ltd.
1st Floor, Copia Corporate Suites,
Commercial Plot 9,
Mathura Road, Jasola,
New Delhi - 110025
E-mail: customercare@miele.in
Website: www.miele.in

Ireland
Miele Ireland Ltd.
2024 Bianconi Avenue
Citywest Business Campus
Dublin 24
Tel: (01) 461 07 10
Fax: (01) 461 07 97
E-Mail: info@miele.ie
Internet: www.miele.ie

Kuwait
Miele Kuwait
Al Wazzan United Trading Co.
P. O. Box : 3379
Hawally, 32034 Kuwait
Tel.: 00965-22001010
Fax: 00965-24838292
E-mail: mail@alwazzanunited.com
Website: www.alwazzanunited.com

Malaysia
Miele Sdn Bhd
Suite 12-2, Level 12
Menara Sapura Kencana
Petroleum
Solaris Dutamas No. 1
Jalan Dutamas 1
50480 Kuala Lumpur, Malaysia
Phone: +603-6209-0288
Fax: +603-6205-3768

New Zealand
Miele New Zealand Limited
IRD 98 463 631
8 College Hill
Freemans Bay, Auckland 1011
New Zealand
Tel: 0800 464 353
Internet: www.miele.co.nz

Singapore
Miele Pte. Ltd.
29 Media Circle
#11-04 ALICE@Mediapolis
Singapore 138565
Tel: +65 6735 1191
Fax: +65 6735 1161
E-Mail: info@miele.com.sg
Internet: www.miele.sg

South Africa
Miele (Pty) Ltd.
63 Peter Place, Bryanston 2194
P.O. Box 69434, Bryanston 2021
Tel: (011) 875 9000
Fax: (011) 875 9035
E-mail: info@miele.co.za
Internet: www.miele.co.za

Thailand
Miele Appliances Ltd.
BHIRAJ TOWER at EmQuartier
43rd Floor Unit 4301-4303
689 Sukhumvit Road
North Klongton Sub-District
Vadhana District
Bangkok 10110, Thailand

United Arab Emirates
Miele Appliances Ltd.
Showroom 1, Eiffel 1 Building
Sheikh Zayed Road, Umm Al Sheif
P.O. Box 114782 - Dubai
Tel. +971 4 3044 999
Fax. +971 4 3418 852
800-MIELE (64353)
E-Mail: info@miele.ae
Website: www.miele.ae

Manufacturer: Miele & Cie. KG, Carl-Miele-Straße 29, 33332 Gütersloh, Germany

Miele

KFN 4375 ..., KFN 4393 ..., KFN 4395 ...

en-GB

M.-Nr. 12 359 320 / 00