LEISURE
PATRICIA URQUIOLA

User Manual
PAS241MB

Please read this manual first!

Dear Customer,

We hope that your product, which has been produced in modern plants and checked under the most meticulous quality control procedures, will provide you with effective service.

For this, we recommend you to carefully read the entire manual of your product before using it and keep it at hand for future references.

The user manual will help you use the product in a fast and safe way.

- Read the manual before installing and operating your product.
- Follow the instructions, especially those for safety.
- Keep the manual in an easily accessible place as you may need it later.
- Besides, read also the other documents provided with your product.

Please note that this manual may be valid for other models as well.

Symbols and their descriptions

This instruction manual contains the following symbols:

	Important information or useful usage tips.
	Warning against dangerous conditions for life and property.
	Warning against electric voltage.

	Packaging materials of the product are manufactured from recyclable materials in accordance with our National Environment Regulations.

1. Safety and environment instructions 3

2 Your refrigerator 7

3 Installation 8

3.1. Appropriate installation location 8
3.2. Installing the plastic wedges. 8
3.3. Electrical connection 8
3.4. Adjusting the feet. 9
3.5. Illumination lamp 9
3.6. Door open warning. 9
3.7. Water connection 10
3.8. Connecting the water hose to the refrigerator 10
3.9. Connecting of the water hose to the cold water mains line 11
3.10. Water filter. 12
3.11. Mounting the external filter onto the wall12
3.12. Activating water filter change warning. .13
3.13. Before starting to use the water/ice dispenser 13
3.14. Transportation of the product 14

4 Preparation 15

4.1. Things to be done for energy saving . . .15
4.2. Efficient operation 15
4.3. Recommendations on the fridge compartment. 15
4.4. Initial use. 15

5 Operating the product 17

5.1. Indicator panel. 17
5.2. NeoFrost Cooling System 20
5.3. Freezing fresh food 20
5.4. Recommendations for preserving the frozen food 21
5.5. Placing the food. 21
5.6. Deep-freeze information. 21
5.7. Chiller compartment. 22
5.8. Butter & cheese section 22
5.9. Egg section 22
5.10. Crisper 22
5.11. Odour filter 22
5.12. Using the dispenser 23
5.13. Minibar 23
5.14. Drip tray 24
5.15. Ice-maker 24
5.16 Humidity controlled crisper 26

6 Maintenance and cleaning 27

6.1 Avoiding bad odours. 27
6.2 Protecting the plastic surfaces 27

7 Troubleshooting 28

1 Safety and environment instructions

This section provides the safety instructions necessary to prevent the risk of injury and material damage. Failure to observe these instructions will invalidate all types of product warranty.

Intended use

	**WARNING:** Keep ventilation openings, in the appliance enclosure or in the built-instructure, clear of obstruction.
	**WARNING:** Do not use mechanical devices or other means to accelerate the defrostingprocess, other than those recommended by the manufacturer.
	**WARNING:** Do not damage the refrigerant circuit.
	**WARNING:** Do not use electrical appliances inside the food storage compartments of the appliance, unless they are of the type recommended by the manufacturer.

1.1. General safety

- This appliance can be used by children aged from 8 years and above and persons with reduced physical,sensory or mental capabilities or lack of experience and knowledge if they have been given supervision or instruction concerning use of the appliance in a safe way and understand the hazards involved. Children shall not play with the appliance.
- In case of malfunction, unplug the device.
- After unplugging, wait at least 5 minutes before plugging in again.
- Unplug the product when not in use.
- Do not touch the plug with wet hands! Do not pull the cable to plug off, always hold the plug.
- Do not plug in the refrigerator if the socket is loose.
- Unplug the product during installation, maintenance, cleaning and repair.
- If the product will not be used for a while, unplug the product and remove any food inside.
- Do not use the product when the compartment with circuit cards located on the upper

back part of the product (electrical card box cover) (1) is open.

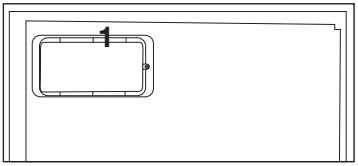

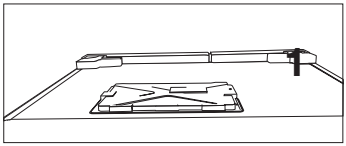

- Do not use steam or steamed cleaning materials for cleaning the refrigerator and melting the ice inside. Steam may contact the electrified areas and cause short circuit or electric shock!
- Do not wash the product by spraying or pouring water on it! Danger of electric shock!
- In case of malfunction, do not use the product, as it may cause electric shock. Contact the authorised service as soon as possible.
- Plug the product into an earthed socket. Earthing must be done by a qualified electrician.
- If the product has LED type lighting, contact the authorised service for replacing or in case of any problem.
- Do not touch frozen food with wet hands! It may adhere to your hands!
- Do not place liquids in bottles and cans into the freezer compartment. They may burst.
- Place liquids in upright position after tightly closing the lid.
- Do not spray flammable substances near the product, as it may burn or explode.
- Do not keep flammable materials and products with flammable gas (sprays, etc.) in the refrigerator.
- Do not place containers holding liquids on top of the product. Splashing water on an electrified part may cause electric shock and risk of fire.
- Exposing the product to rain, snow, sunlight and wind will cause electrical danger. When relocating the product, do not pull by holding the door handle. The handle may come off.
- Take care to avoid trapping any part of your hands or body in any of the moving parts inside the product.

- Do not step or lean on the door, drawers and similar parts of the refrigerator. This will cause the product to fall down and cause damage to the parts.
- Take care not to trap the power cable.

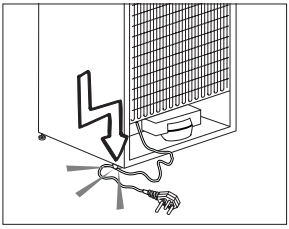

1.1.1 HC warning

If the product comprises a cooling system using R600a gas, take care to avoid damaging the cooling system and its pipe while using and moving the product. This gas is flammable. If the cooling system is damaged, keep the product away from sources of fire and ventilate the room immediately.

The label on the inner left side indicates the type of gas used in the product.

1.1.2 For models with water dispenser

- Pressure for cold water inlet shall be maximum 90 psi (6.2 bar). If your water pressure exceeds 80 psi (5.5 bar), use a pressure limiting valve in your mains system. If you do not know how to check your water pressure, ask for the help of a professional plumber.
- If there is a risk of water hammer effect in your installation. Consult a plumber.
- Do not install on the hot water inlet. Take precautions against of the risk of freezing of the hoses. Water temperature operating interval shall be 33°F (0.6°C) minimum and 100°F (38°C) maximum.
- Use drinking water only.

1.2. Intended use

- This product is designed for home use. It is not intended for commercial use.
- The product should be used to store food and beverages only.
- Do not keep sensitive products requiring controlled temperatures (vaccines, heat sensitive medication, medical supplies, etc.) in the refrigerator.

- The manufacturer assumes no responsibility for any damage due to misuse or mishandling.

1.3. Child safety

- Keep packaging materials out of children's reach.
- Do not allow the children to play with the product.
- If the product's door comprises a lock, break off the lock when eventually disposing of the product.

1.4. Compliance with WEEE Directive and Disposing of the Waste Product

This product complies with EU WEEE Directive (2012/19/EU). This product bears a classification symbol for waste electrical and electronic equipment (WEEE).

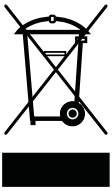

This product has been manufactured with high quality parts and materials which can be reused and are suitable for recycling. Do not dispose of the waste product with normal domestic and other wastes at the end of its service life. Take it to the collection center for the recycling of electrical and electronic equipment. Please consult your local authorities to learn about these collection centers.

1.5. Compliance with RoHS Directive

- This product complies with EU WEEE Directive (2011/65/EU). It does not contain harmful and prohibited materials specified in the Directive.

1.6. Package information

- Packaging materials of the product are manufactured from recyclable materials in accordance with our National Environment Regulations. Do not dispose of the packaging materials together with the domestic or other wastes. Take them to the packaging material collection points designated by the local authorities.

2 Your refrigerator

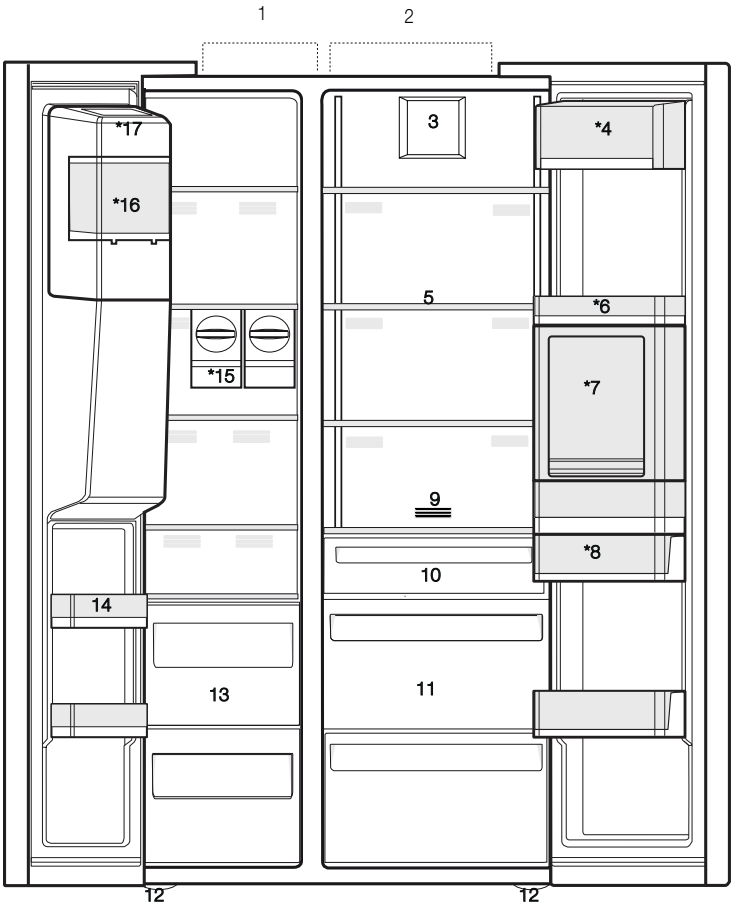

1- Freezer compartment
2- Fridge compartment
3- Fan
4- Butter-cheese compartments
5- Glass shelves
6- Fridge compartment door racks and egg compartment
7- Minibar accessory
8- Water dispenser tank
9- Odour filter
10- Chiller compartment
11- Crisper compartment
12- Adjustable feet
13- Frozen food storage compartments
14- Freezer compartment door racks
15- Ice makers
16- Ice storage compartment
17- Ice maker decorative cover

*Optional: Figures in this user manual are schematic and may not match the product exactly. If the relevant parts are not available in the product you purchased, it applies to other models.

3 Installation

Always have the repair procedures carried out by the Authorised Service Agent. Manufacturer shall not be held liable for damages that may arise from procedures carried out by unauthorised persons. To make the product ready for use, make sure that the electricity installation is appropriate before calling the Authorised Service Agent. If not, call a qualified electrician to have any necessary arrangements carried out.

	Preparation of the location and electrical installation at the place of installation is under customer's responsibility.
	Product must not be plugged in during installation. Otherwise, there is the risk of death or serious injury!
	WARNING: Manufacturer shall not be held liable for damages that may arise from procedures carried out by unauthorised persons.
	WARNING: Prior to installation, visually check if the product has any defects on it. If so, do not have it installed. Damaged products cause risks for your safety.
	Make sure that the power cable is not pinched or crushed while pushing the product into its place after installation or cleaning procedures.

3.1. Appropriate installation location

	WARNING: If the door of the room where the product will be placed is too small for the product to pass, then the product's doors can be removed and the product turned aside to pass it through.

- Choose a place at where you would use the product comfortably.
- Install the product at least 30 cm away from heat sources such as hobs, ovens, heater cores and stoves. Product must not be subjected to direct sun light and kept in humid places after installation.
- Appropriate air ventilation must be provided around your product in order to achieve an efficient operation. If the product is to be placed in a recess in the wall, pay attention to leave at least 5 cm distance with the ceiling and side walls.
- Do not place the product on the materials such as rugs or carpets.
- Place the product on an even floor surface to prevent jolts.
- Do not install the product in places where the temperature falls below -5°C.

	If two coolers are to be installed side by side, there should be at least 4 cm distance between them.

3.2. Installing the plastic wedges

Plastic wedges are used to create the distance for the air circulation between the product and the rear wall. Insert the 2 plastic wedges onto the rear ventilation cover as illustrated in the figure. To install the wedges, remove the screws on the product and use the screws given in the same pouch with the wedges.

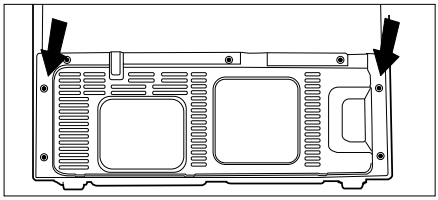

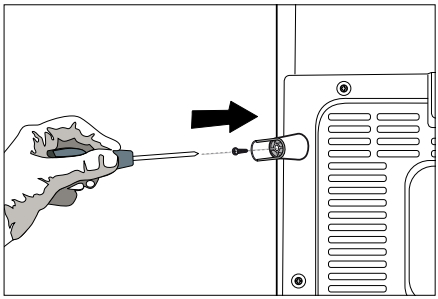

3.3. Electrical connection

Connect the product to a grounded outlet protected by a fuse complying with the values in the rating plate. Our company shall not be liable for any damages that will arise when the product is used without grounding in accordance with the local regulations.

- Electrical connection must comply with national regulations.
- Power cable plug must be within easy reach after installation.
- The voltage and allowed fuse or breaker protection are specified in the Rating Plate which is affixed to interior of the product. If the current value of the fuse or breaker in the house does not comply with the value in the rating plate, have a qualified electrician install a suitable fuse.
- The specified voltage must be equal to your mains voltage.
- Do not make connections via extension cables or multi-plugs.

WARNING: Damaged power cable must be replaced by the Authorised Service Agents.

WARNING: If the product has a failure, it should not be operated unless it is repaired by the Authorised Service Agent! There is the risk of electric shock!

3.4. Adjusting the feet

If the product stands unbalanced after installation adjust the feet. Taking help from someone to slightly lift the refrigerator will facilitate this process.

WARNING: First unplug the product. Product must not be plugged in when adjusting the feet. There is the risk of electric shock!

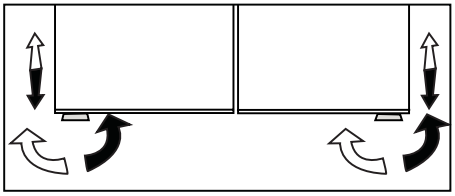

Turn the front feet to balance the product. The corner where the foot exists is lowered when you turn in the direction of arrow and raised when you turn it in the opposite direction.

In order to adjust the doors vertically,

•Loosen the fixing nut at the bottom

•Screw adjusting nut (CW/CCW) according to the position of the door

•Tighten the fixing nut for the final position

In order to adjust the doors horizontally,

- Loosen the fixing bolt on the top
- Screw the adjusting bolt (CW/CCW) on the side according to the position of the door
- Tighten the fixing bolt on the top for the final position

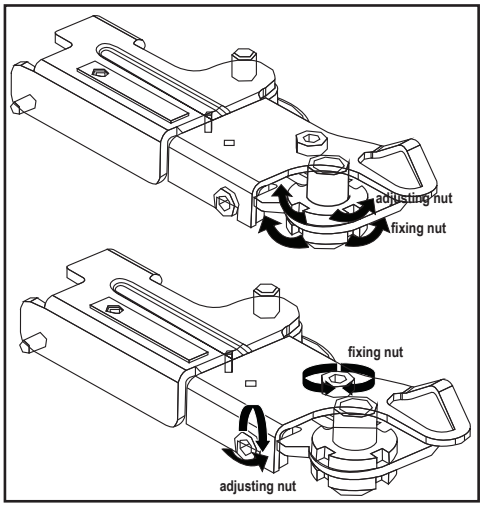

3.5. Illumination lamp

Do not attempt to repair yourself but call the Authorised Service Agent if the LED illumination lamps do not go on or are out of order.

3.6. Door open warning

(This feature is optional)

An audio warning signal will be given when the door of your product is left open for 1 minute. This warning will be muted when the door is closed or any of the display buttons (if any) are pressed.

3.7. Water connection

(This feature is optional)

Water system installation of the refrigerator must be performed by a competent person.
Depending on the model of the refrigerator, you may not have to connect to water main.First you must connect the water hose to the refrigerator.

Check that following parts have been delivered together with the product:

1. Union for connecting the water hose to the rear of the refrigerator
2. 3 pieces of pipe clips (used to secure the water hose)
3. 5-meter long water hose (1/4 inch in diameter)
4. (4) Cold mains water valve with mesh filter (tap adapter)
5. (5) External water filter.

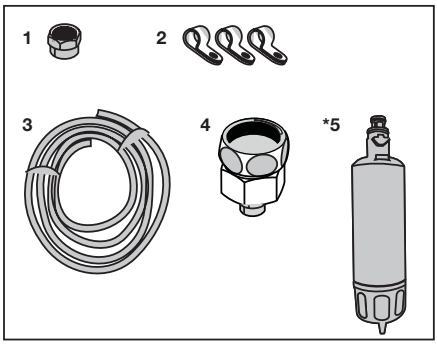

3.8. Connecting the water hose to the refrigerator

1. Slip the union (b) onto the water hose (a).
2. Push the water hose downwards firmly to slip it onto the water inlet valve (c).

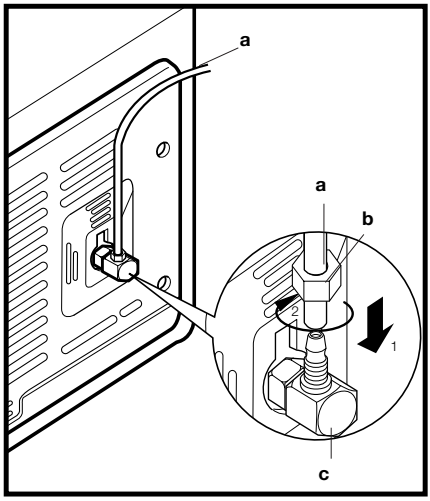

3. Tighten the union (c) by hand to secure it onto the water inlet valve.

Normally, you are not required to tighten the union with a tool. However, you can use a spanner or pliers to tighten the union if there is a leakage.

3.9. Connecting of the water hose to the cold water mains line

(This feature is optional)

If you will use the refrigerator by connecting it to the cold water mains line, you must install a standard 1/2" valve connector to the cold water installation of your home. If this valve is not present or you are not sure, consult a qualified plumber.

1. Separate the union from the tap adaptor.
2. Install the tap adaptor to standard 1/2” valve connector.
3. After inserting the water hose to the union, install it to the tap adaptor and insert to the union to the tap adapter.
4. Tighten the union by hand.

⚠	**WARNING:** Secure the water hose to suitable points by means of the clips supplied to avoid any damage or displacement or accidental disconnection.
⚠	**WARNING:** After turning on the water valve, make sure that there is no leakage at both connection points of the water hose. If there is a leakage, turn off the valve immediately and tighten all joints again using a spanner or a pliers.
⚠	**WARNING:** Make sure that standard 1/2" valve connector is available and completely turned off on your cold water mains line.

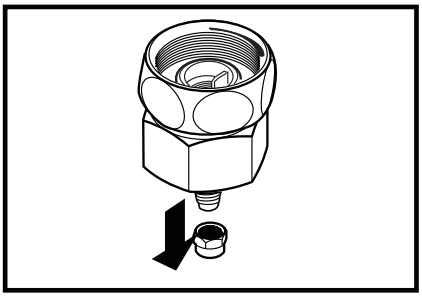

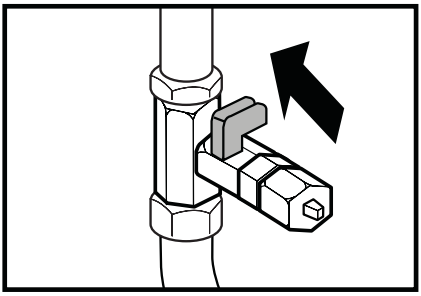

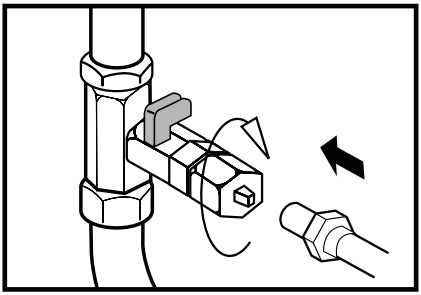

3.10.Water filter

(This feature is optional)
Your refrigerator may be equipped with an external or internal filter depending on its model. To fit the water filter, follow the instructions below referring to the figures supplied:

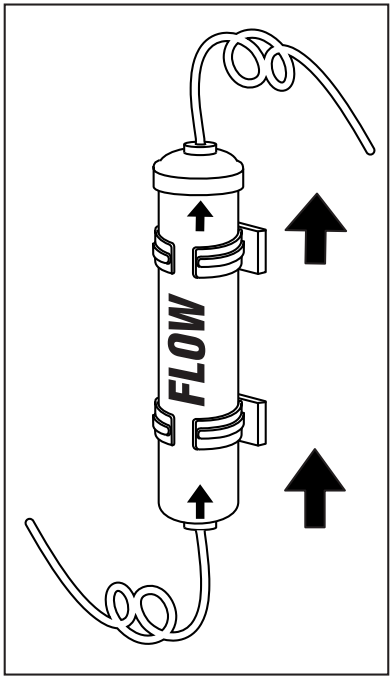

3.11.Mounting the external filter onto the wall

1. First, determine the location to mount the external filter.
2. Then, determine the distance between the filter and the tap and filter and the water inlet respectively. Prepare hoses at required lengths.
3. Mount the filter connection kit onto the wall by using a screwdriver and attach the filter.

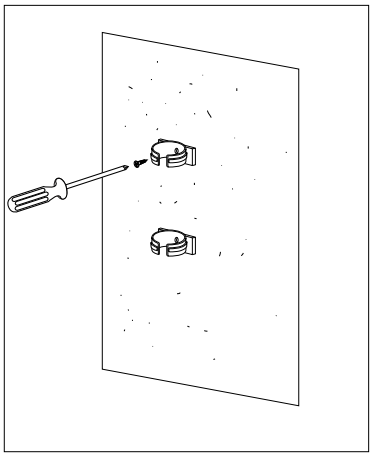

	After connecting the filter, do not consume the first 10 glasses of water.
	WARNING: Never mount the filter onto the refrigerator. Coolant pipes might be pierced!

	WARNING: Water filter must be held upright as shown in the figure. It is critical to connect the water inlet and outlet hoses on the filter correctly.

3.12.Activating water filter change warning

(For products connected to the mains water line and equipped with filter)

Water filter change warning is activated as follows:

1. Within 60 seconds after switching on the refrigerator, press and hold the Display and Vacation buttons for 3 seconds.

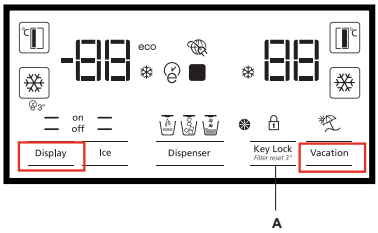

2. Then enter 1-4-5-3 as password.

Confirming the entered password

Selecting the password numbers

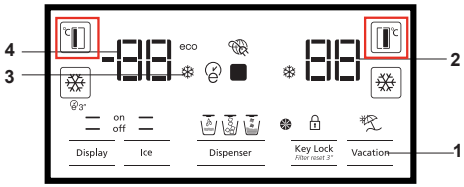

Enter 1-4-5-3 as follows:

Press FF set button for once.

Press FRZ set button for once.

Press FF set button for 4 times.

Press FRZ set button for once.

Press FF set button for 5 times.

Press FRZ set button for once.

Press FF set button for 3 times.

Press FRZ set button for once.

If the password is entered correctly, buzzer will sound shortly and Filter Change Warning indicator will turn on.

Automatic filter usage time calculation is not enabled ex factory.

It must be enabled in products equipped with a filter.

The refrigerator will give filter change warning with 6-month intervals automatically.

If the same procedure is repeated when the automatic filter usage time calculation is enabled, then the function will be canceled.

3.13.Before starting to use the water/ice dispenser

(This feature is optional)

- If the water pressure is below 1 bar then a separate pump may need to be used.
- Water system of the refrigerator must be connected to the cold water line. It must not be connected to hot water line.
- No water may be obtained in the initial start-up of the refrigerator. Because there is air in the system. To discharge air from the system, press dispenser latch for 1-2 minutes until water comes from the dispenser. Water flow may be irregular at the beginning. After the air in the system is discharged, water flow will return to normal.
- During initial use, you will have to wait approximately 12 hours for the water to cool down.
- It will take around 1-2 days for the system to produce the full amount of ice.
- Water pressure must be between 1-8 bars for the operation of ice/water dispenser smoothly. For this, check that 1 glass of water (100 cc) can be filled in 10 seconds.
- The first 10 glasses of water should not be consumed.
- You must wait approximately 12 hours to obtain ice from the ice dispenser for the first time. If there is not enough ice in the ice container, ice may not be obtained from ice dispenser.
- Do not consume the first 30 pieces (3-4 Liters) of ice cubes.
- First several glasses of water may be cloudy when the filter is used for the first time. Therefore, do not consume the first several glasses of water.

- If the water dispenser is not used for a long period of time, first 1-2 glasses of water can be not so cold.
- If a power outage or a temporary failure occurs while the refrigerator is operating, ice can melt down a little bit and then get frozen again. In such a case, ice cubes can stick to each other. If the outage or failure prolongs, ice can melt down causing water leakage. If you experience such a problem, empty and clean the ice container.
- Ice cubes can stick to each other if they are left in the container for a long time.
- If the product is to be connected to the water mains, make sure that you use potable water.
- Water system of the product is designed to operate only with water. Do not use beverage such as soft drinks and/or juices in the water system.
- It is recommended that the water is disconnected if you will not be using the refrigerator for a long period of time due to vacation or similar reasons.
- Do not attempt to dismantle the ice container group assembly parts.
- Do not attempt to clean the ice container assembly without removing it from the refrigerator.

3.14.Transportation of the product

1. Unplug the product before transporting it.
2. Remove water connections.
3. Secure the shelves, accessories, crisper and etc. in the refrigerator by adhesive tape before repackaging it.

	Packaging must be adequate and the rules of transportation printed on the package must be followed.
	Original packaging and foam materials should be kept for future transportations.
	**WARNING:** Packaging materials are dangerous for the children. Keep packaging materials in a safe place away from reach of the children.

4 Preparation

4.1. Things to be done for energy saving

Connecting the product to electric energy saving systems is risky as it may restrict operation of the product.

- Do not leave the doors of your refrigerator open for a long time.
- Do not put hot food or drinks in your refrigerator.
- Do not overload the refrigerator. Cooling capacity will fall when the air circulation inside is hindered.
- Do not place the refrigerator in places subject to direct sunlight. Install the product at least 30 cm away from heat sources such as hobs, ovens, heater cores.
- Store your food in refrigerator in closed containers.
- Thawing frozen food in fridge compartment will both provide energy saving and preserve the food quality.

The ambient temperature of the room where you install the refrigerator should at least be 5°C. Operating your refrigerator under cooler conditions than this is not recommended.

Inside of your refrigerator must be cleaned.

If two coolers are to be installed side by side, there should be at least 4 cm distance between them.

4.2. Efficient operation

Specified energy consumption value of your refrigerator is determined under maximum load by removing the freezer compartment upper rack and while other racks and two bottom drawers are in place. there is no harm to remove a shelf or drawer to accommodate the shapes and size of food to be frozen.

4.3. Recommendations on the fridge compartment

- Do not allow the food to touch the temperature sensor in fridge compartment. To allow the fridge compartment to keep its ideal storage temperature, sensor must not be hindered by food.
- Do not put hot food and beverages inside the product.

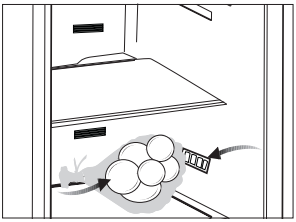

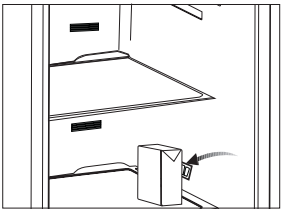

4.4. Initial use

Before starting to use the product, check that all preparations are made in accordance with the instructions in sections "Important instructions for safety and environment" and "Installation".

- Clean the interior of the refrigerator as recommended in the “Maintenance and cleaning” section. Check that inside of it is dry before operating it.
- Plug the refrigerator into the grounded wall outlet. When the door is opened the interior illumination will turn on.
- Run the refrigerator without putting any food for 6 hours and do not open its door unless absolutely necessary.

	You will hear a noise when the compressor starts up. The liquids and gases sealed within the refrigeration system may also give rise to noise, even if the compressor is not running and this is quite normal.
	Front edges of the refrigerator may feel warm. This is normal. These areas are designed to be warm to avoid condensation.

5 Operating the product

5.1. Indicator panel

Indicator panels may vary according to the product model.

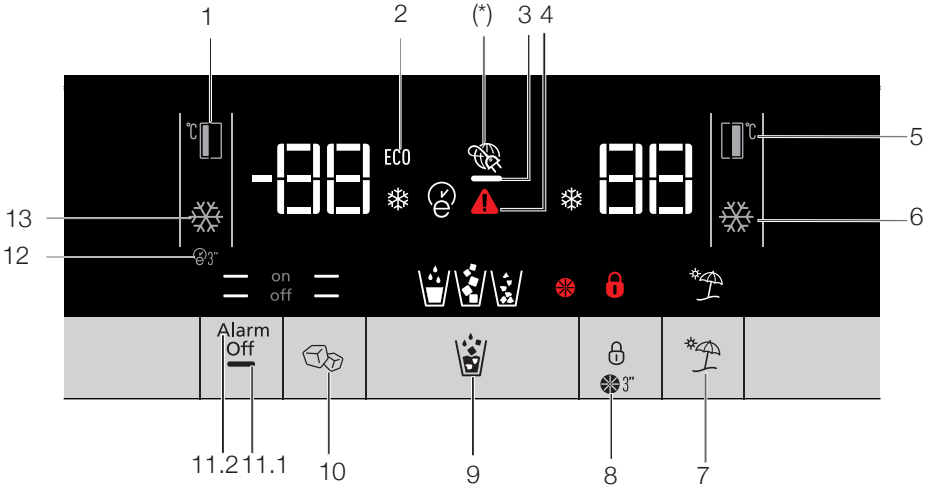

1. Freezer compartment temperature setting
2. Economy mode
3. Energy saving function (display off)
4. Power failure/High temperature / error warning indicator
5. Cooler compartment temperature setting
6. Rapid cooling
7. Vacation function
8. Keypad lock / filter replacing alert cancellation
9. Water, fragmented ice, ice cubes selection
10. Ice making on/off
11. Display on/of**/**Alarm off warning
12. Autoeco
13. Rapid freezing

*Optional**:**Figures in this user manual are schematic and may not match the product exactly. If the subject parts are not included in the product you have purchased, then those parts are valid for other models.

Operating the product

1. Freezer compartment temperature setting

Pressing the button ( ) will enable the freezer compartment temperature to be set at -18,-19,-20,-21 ,-22,-23,-24,-18...

2. Economy mode

Indicates the refrigerator is running on energy-saving mode. This indicator will be active when the freezer compartment temperature is set at -18 or the energy-saving cooling is engaged by eco-extra function. (ECO)

3.Energy saving function (display off)

If the product doors are kept closed for a long time energy saving function is automatically activated and energy saving symbol is illuminated. When energy saving function is activated, all symbols on the display other than energy saving symbol will turn off. When the Energy Saving function is activated, if any button is pressed or the door is opened, energy saving function will be canceled and the symbols on display will return to normal.

Energy saving function is activated during delivery from factory and cannot be canceled.

4. Power failure/High temperature / error warning indicator

This indicator ( ) will light up in case of temperature faults or fault alerts. If you see this indicator is lit up, please see the "recommended solutions for problems" section in this guide.

This indicator illuminates during power failure, high temperature failures and error warnings. During sustained power failures, the highest temperature that the freezer compartment reaches will flash on the digital display. After checking the food located in the freezer compartment press the alarm off button to clear the warning.

Please refer to "remedies advised for troubleshooting" section on your manual if you observe that this indicator is illuminated.

5. Cooler compartment temperature setting

After pressing the button ( ), the cooler compartment temperature can be set to 8,7,6,5,4,3,2.. respectively.

6. Rapid cooling

For rapid cooling , press the button; this will activate the rapid cooling indicator ( ).

Press this button again to deactivate this function.

Use this function when placing fresh foods into the cooler compartment or to rapidly cool the food items. When this function is activated, the refrigerator will be engaged for 1 hour.

7. Vacation function

When the Vacation function ( ) is active, the cooler compartment temperature indicator displays the inscription "- -" and no cooling process will be active in the cooling compartment. This function is not suitable to keep food in the cooler compartment. Other compartments will remain cooled with the respective temperature set for each compartment.

Press the vacation function button again to cancel this function. ( )

8. Keypad lock / Keypad lock / filter replacing alert cancellation

Press keypad lock button ( ) to activate the keypad lock. You may also use this function to prevent changing the refrigerator's temperature settings. The refrigerator's filter must be replaced every 6 months. If you follow the instructions in the section 5.2, the refrigerator will automatically calculate the remaining period and the filter replacing alert indicator ( ) will light up when filter expires.

Press and hold the button ( ) for 3 seconds to turn off the filter alert light.

9. Water, fragmented ice, ice cubes selection

Navigate the water ( ), ice cube ( ) and fragmented ice ( ) selections using the button number 8. The active indicator will remain lit.

10. Ice making on/off

Press the button ( ) to cancel (off —) or activate (on —) ice-making.

11.1 Display on/off

Press the button (— off) to cancel (XX) or activate (— on) display on/off.

11.2 Alarm off warning

In case of power failure/high temperature alarm, after checking the food located in the freezer compartment press the alarm off button to clear the warning.

12. Autoeco

Press the auto eco button (3"), for 3 seconds to activate this function. If the door remains closed for a long time when this function is activated, the cooler section will switch to economic mode. Press the button again to deactivate this function.

The indicator will light up after 6 hours when the auto eco function is active.

13. Rapid freezing

Press the button for rapid freezing. Press the button again to deactivate the function.

5.2. NeoFrost Cooling System

Thanks to the two separate cooling systems, cooling speed is much faster than traditional refrigerators. Air in the fridge is kept with optimal humidity which is essential for fruit and vegetables and the freezer maintains a dry environment. Odours are also not transferred from the fridge to freezer and vice versa.

5.3. Freezing fresh food

- Wrap the food or place them in a covered container before putting in the freezer.
- Hot food and beverages must cool down to the room temperature before putting them in the freezer.
- The foodstuff that you want to freeze must be fresh and in good quality.
- Divide the food into portions according to your family's daily or meal based consumption needs.
- Pack the food in an airtight manner to prevent them from drying even if they are going to be stored for a short time.
- Materials to be used for packaging must be tear-proof and resistant to cold, humidity, oils and acids and they must also be airtight. Moreover, they must be made from easy-to-use materials that are suitable for deep-freezers.
- Frozen food must be used immediately after they are thawed and they should never be re-frozen.
- Do not freeze too large quantities of food at one time. The quality of the food is best preserved when it is frozen right through to the core as quickly as possible.
- Placing warm food into the freezer compartment causes the cooling system to operate continuously until the food is frozen solid.

Freezer Compartment Setting	Fridge Compartment Setting	Remarks
-18°C	4°C	This is the normal recommended setting.
-20, -24 or -24°C	4°C	These settings are recommended when the ambient temperature exceeds 30°C.
Quick Freeze	4°C	Use when you wish to freeze your food in a short time. Your refrigerator will return to its previous mode when the process is over.
-18°C or colder	2°C	Use these settings if you think that your fridge compartment is not cold enough because of the hot ambient conditions or frequent opening and closing of the door.
-18°C or colder	Quick Fridge	Use this function when you place a large amount into the fridge compartment or when you need to cool your food quickly. It is recommended that you activate Quick Fridge function 4-8 hours before placing a lot of food at once.

5.4. Recommendations for preserving the frozen food

- Frozen food that you have purchased should be stored in accordance with the frozen food manufacturer's instructions for a ******** (4 star) frozen food storage compartment.
- Note the following to ensure that the high quality achieved by the frozen food manufacturer and the food retailer is maintained:

1. Put packets in the freezer as quickly as possible after purchase.
2. Make sure that contents of the package are labelled and dated.
3. Check whether the "Use By" and "Best Before" dates on the packaging are exceed or not.

5.5. Placing the food

Freezer compartment shelves	Various frozen food such as meat, fish, ice cream, vegetables and etc.
Egg section	Eggs
Refrigerator compartment shelves	Food in pans, covered plates and closed containers
Door shelves of fridge compartment	Small and packaged food or beverage (such as milk, fruit juice, beer and etc.)
Crisper	Vegetables and fruits
Chiller compartment	Delicatessen products (cheese, butter, salami and wrapped fresh meat and fish.)

5.6. Deep-freeze information

Food must be frozen as rapidly as possible when they are put in a refrigerator in order to keep them in good quality.
It is possible to preserve the food for a long time only at -18°C or lower temperatures.
You can keep the freshness of food for many months (at -18°C or lower temperatures in the deep freeze).

Divide the food into portions according to your family's daily or meal based consumption needs.

Pack the food in an airtight manner to prevent them from drying even if they are going to be stored for a short time.

- Materials necessary for packaging:
- Cold resistant adhesive tape
- Self-adhesive label
- Rubber bands
- Pen

Materials to be used for packaging the foodstuff must be tear-proof and resistant to cold, humidity, odour, oils and acids.
Foods to be frozen should not be allowed to come in contact with the previously frozen items to prevent them from getting thawed partially.

Frozen food must be used immediately after they are thawed and they should never be re-frozen.

5.7. Chiller compartment

***optional**

The chiller compartment maintains a lower temperature then the rest of the fridge, ideal for storing fresh meat fish and deli items.

You can increase the inner volume of your refrigerator by removing any of the chiller compartments:

1. Pull the compartment towards yourself until it stops.
2. Lift the compartment about 1 cm up and pull towards yourself to remove it from its seating.

5.8. Butter & cheese section

***optional**

Store food such as butter, cheese and margarine in this section.

5.9. Egg section

You can install the egg holder to the desired door or body shelf.

Never keep the egg holder in the freezer compartment.

5.10.Crisper

Crisper of the refrigerator is designed specially to keep the vegetables fresh without losing their humidity. For this purpose, cool air circulation is intensified around the crisper in general. Remove the door shelves that stand against the crisper before removing the crispers.

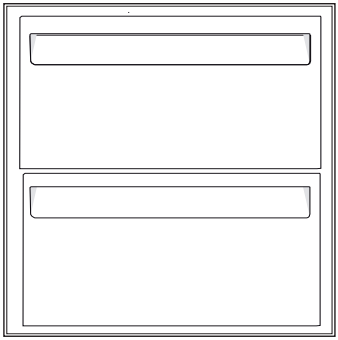

5.11.Odour filter

***optional**

Odour filter prevents unpleasant odour build-up in your refrigerator.

Odour filter can be located in the fridge compartment on the back wall.Pull the cover into which the odour filter is installed downwards from the front section and remove as illustrated. Leave the filter under sunlight for one day. Filter will be cleaned during this time. Install the filter back to its place.

Odour filter must be cleaned once in a year.

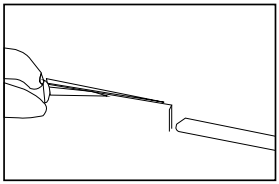

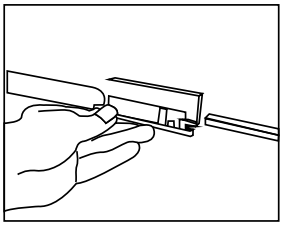

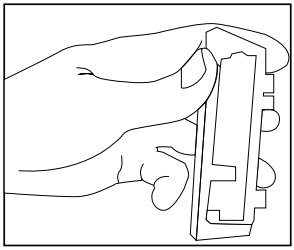

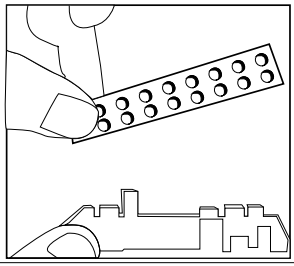

5.12.Using the dispenser

***optional**

The water and ice dispenser will provide chilled water and ice either direct from your water supply or the water container in the fridge.

	It is normal for the first few glasses of water taken from the dispenser to be warm if not used for a long time.
	If the water dispenser is not used for a long period of time, dispose of first few glasses of water to obtain cool fresh water.

During initial use, you will have to wait approximately 12 hours for the water to cool down. To take water/ice from the dispenser, first select the option required then obtain by pushing the lever.Take out the glass a little while after you by pushing the lever.

Push the lever of the water dispenser with your glass. The dispenser will cease operating once you release the lever.

When operating the water dispenser, maximum flow can be obtained by pressing the lever fully. Please remember that the amount of flow from the dispenser is subject to the degree you press the lever.

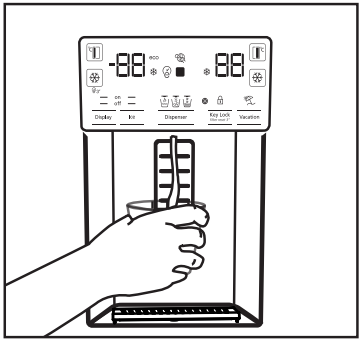

As the level of the water in your glass/container rises, slightly lessen the pressure on the lever to prevent the overspill. If you slightly press the lever, the water will drip; this is quite normal and not a failure.

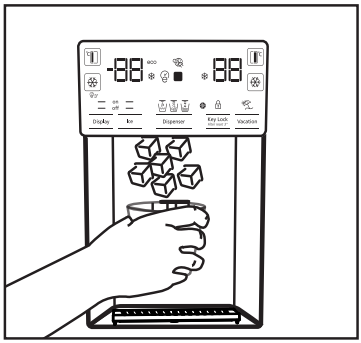

5.13.Minibar

(Optional)

The refrigerator's minibar door shelf can be accessed without opening the door. This will allow you to easily take frequently consumed food and beverages from the refrigerator. To open the minibar cover, push with your hand and pull towards yourself.

	WARNING: Do not sit, hang or place heavy objects on the minibar cover. This may damage the product or cause you to be injured.

To close this compartment, simply push forward from the upper section of the cover.

5.14.Drip tray

***optional**

Water that dripped while using the water dispenser accumulates in the spillage tray. You can remove the tray by pulling it to yourself or pressing on its edge (depending on the model). Remove the water with a sponge or a soft cloth.

- Use clean and pure potable water only.
- Capacity of the water tank is 3 liters; do not overfill.
- Push the arm of the water dispenser with a rigid glass. If you are using disposable plastic glasses, push the arm with your fingers from behind the glass.

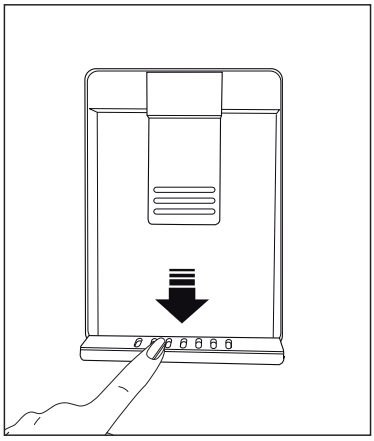

5.15.Ice-maker

(Optional)

Ice maker is located on the upper section of the freezer cover.

Hold the handles on the sides of the ice stock reservoir and move up to remove.

Remove the ice-maker decorative lid by moving up.

OPERATION

To remove the ice reservoir

Hold the ice stock reservoir from the handles, then move up and pull the ice stock reservoir. (Figure 1)

To reinstall the ice reservoir

Hold the ice stock reservoir from the handles, move up with an angle to fit the sides of the reservoir to their slot and make sure that the ice selector pin is mounted properly. (Figure 2)

Push downwards firmly, until there is no space left between the reservoir and the door plastic. (Figure 2)

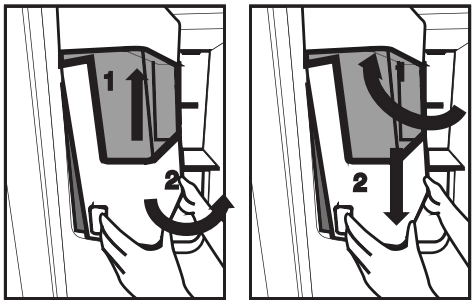

If you have difficulty in refitting the reservoir, turn the rotary gear 90° and reinstall it as shown in the figure3. Any sound you hear when the ice drops into the reservoir is a part of normal operation.

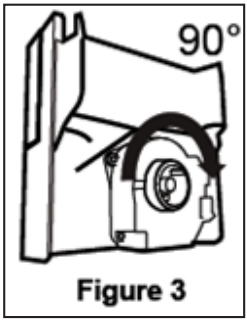

Figure 3

When the ice dispenser does not work properly

If you do not remove ice cubes for a long time, they will cause formation of ice chunks. In this case, please remove the ice stock reservoir in accordance with the instructions given above, seperate the ice chunks, discard the inseparable ice and put the ice cubes back into the ice stock reservoir. (Figure 4)

When ice does not come out, check for any ice stuck in the canal and remove it. Regularly check the ice canal to clear the obstacles as shown in the figure 5.

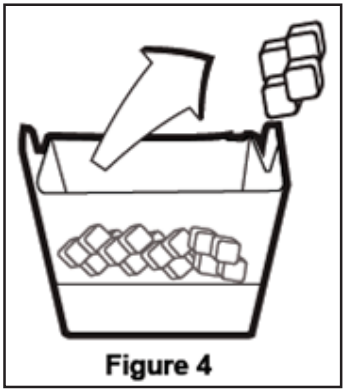

Figure 4

When using your refrigerator for the first time or when not using it for an extended period of time Ice cubes may be small due to air in the pipe after connection, any air will be purged during normal use.

Discard the ice produced for approximately one day since the water pipe may contain the contaminants.

Caution!

Do not insert the hand or any other object into the ice canal and blade since it may damage the parts or hurt the hand.

Do not let the children hang on the ice dispenser or the ice maker since it may cause an injury

To prevent dropping the ice stock reservoir use both hands when removing it.

If you close the door hard, it may cause water spilling over the ice stock reservoir.

Do not dismount the ice stock reservoir unless it is necessary.



Figure 5

If you close the door hard, it may cause water spilling over the ice stock reservoir.

Do not dismount the ice stock reservoir unless it is necessary.

5.16 Humidity controlled crisper

(FreSHelf)

(This feature is optional)

Humidity rates of the vegetables and fruit are kept under control with the feature of humidity-controlled crisper and the food is ensured to stay fresh for longer.

We recommend you to place the leafy vegetables such as lettuce, spinach and the vegetables which are sensitive to humidity loss, in a horizontal manner as much as possible inside the crisper, not on their roots in a vertical position.

While the vegetables are being placed, specific gravity of the vegetables should be taken into consideration. Heavy and hard vegetables should be put at the bottom of the crisper and the lightweight and soft vegetables should be placed over.

Never leave the vegetables inside the crisper in their bags. If the vegetables are left inside their bags, this will cause them to decompose in a short period of time. In case contacting with other vegetables is not preferred for hygiene concerns, use a perforated paper and other similar packaging materials instead of a bag.

Do not place together the pear, apricot, peach, etc. and apple in particular which have a high level of generation of ethylene gas in the same crisper with the other vegetables and fruit. The ethylene gas which is emitted by these fruit may cause the other fruit to ripen faster and decompose in a shorter time.

6 Maintenance and cleaning

Cleaning your fridge at regular intervals will extend the service life of the product.



WARNING: Unplug the product before cleaning it.

- Never use gasoline, benzene or similar substances for cleaning purposes.
- Never use any sharp and abrasive tools, soap, household cleaners, detergent and wax polish for cleaning.
- Dissolve one teaspoon of bi-carbonate in half litre of water. Soak a cloth with the solution and wrung it thoroughly. Wipe the interior of the refrigerator with this cloth and the dry thoroughly.
- Make sure that no water enters the lamp housing and other electrical items.
- If you will not use the refrigerator for a long period of time, unplug it, remove all food inside, clean it and leave the door ajar.
- Check regularly that the door gaskets are clean. If not, clean them.
- To remove door and body shelves, remove all of its contents.
  Remove the door shelves by pulling them up. After cleaning, slide them from top to bottom to install.
- Never use cleaning agents or water that contain chlorine to clean the outer surfaces and chromium coated parts of the product. Chlorine causes corrosion on such metal surfaces.

6.1 Avoiding bad odours

Materials that may cause odour are not used in the production of our refrigerators. However, due to inappropriate food preserving conditions and not cleaning the inner surface of the refrigerator as required can bring forth the problem of odour. Pay attention to following to avoid this problem:

- Keeping the refrigerator clean is important. Food residuals, stains, etc. can cause odour. Therefore, clean the refrigerator with bi-carbonate dissolved in water every few months. Never use detergents or soap.
- Keep the food in closed containers. Microorganisms spreading out from uncovered containers can cause unpleasant odours.
- Never keep the food that have passed best before dates and spoiled in the refrigerator.

6.2 Protecting the plastic surfaces

Do not put liquid oils or oil-cooked meals in your refrigerator in unsealed containers as they damage the plastic surfaces of the refrigerator. If oil is spilled or smeared onto the plastic surfaces, clean and rinse the relevant part of the surface at once with warm water.

7 Troubleshooting

Check this list before contacting the service. Doing so will save you time and money. This list includes frequent complaints that are not related to faulty workmanship or materials. Certain features mentioned herein may not apply to your product.

The refrigerator is not working.

- The power plug is not fully settled. >>> Plug it in to settle completely into the socket.
- The fuse connected to the socket powering the product or the main fuse is blown. >>> Check the fuses.

Condensation on the side wall of the cooler compartment (MULTI ZONE, COOL, CONTROL and FLEXI ZONE).

- The environment is too cold. >>> Do not install the product in environments with temperatures below -5°C.
- The door is opened too frequently >>> Take care not to open the product's door too frequently.
- The environment is too humid. >>> Do not install the product in humid environments.
- Foods containing liquids are kept in unsealed holders. >>> Keep the foods containing liquids in sealed holders.
- The product's door is left open. >>> Do not keep the product's door open for long periods.
- The thermostat is set to too low temperature. >>> Set the thermostat to appropriate temperature.

Compressor is not working.

- In case of sudden power failure or pulling the power plug off and putting back on, the gas pressure in the product's cooling system is not balanced, which triggers the compressor thermic safeguard. The product will restart after approximately 6 minutes. If the product does not restart after this period, contact the service.
- Defrosting is active. >>> This is normal for a fully-automatic defrosting product. The defrosting is carried out periodically.
- The product is not plugged in. >>> Make sure the power cord is plugged in.
- The temperature setting is incorrect. >>> Select the appropriate temperature setting.
- The power is out. >>> The product will continue to operate normally once the power is restored.

The refrigerator's operating noise is increasing while in use.

- The product's operating performance may vary depending on the ambient temperature variations. This is normal and not a malfunction.

The refrigerator runs too often or for too long.

- The new product may be larger than the previous one. Larger products will run for longer periods.
- The room temperature may be high. >>> The product will normally run for long periods in higher room temperature.
- The product may have been recently plugged in or a new food item is placed inside. >>> The product will take longer to reach the set temperature when recently plugged in or a new food item is placed inside. This is normal.
- Large quantities of hot food may have been recently placed into the product. >>> Do not place hot food into the product.
- The doors were opened frequently or kept open for long periods. >>> The warm air moving inside will cause the product to run longer. Do not open the doors too frequently.
- The freezer or cooler door may be ajar. >>> Check that the doors are fully closed.
- The product may be set to temperature too low. >>> Set the temperature to a higher degree and wait for the product to reach the adjusted temperature.
- The cooler or freezer door washer may be dirty, worn out, broken or not properly settled. >>> Clean or replace the washer. Damaged / torn door washer will cause the product to run for longer periods to preserve the current temperature.

Troubleshooting

The freezer temperature is very low, but the cooler temperature is adequate.

- The freezer compartment temperature is set to a very low degree. >>> Set the freezer compartment temperature to a higher degree and check again.

The cooler temperature is very low, but the freezer temperature is adequate.

- The cooler compartment temperature is set to a very low degree. >>> Set the freezer compartment temperature to a higher degree and check again.

The food items kept in cooler compartment drawers are frozen.

- The cooler compartment temperature is set to a very low degree. >>> Set the freezer compartment temperature to a higher degree and check again.

The temperature in the cooler or the freezer is too high.

- The cooler compartment temperature is set to a very high degree. >>> Temperature setting of the cooler compartment has an effect on the temperature in the freezer compartment. Wait until the temperature of relevant parts reach the sufficient level by changing the temperature of cooler or freezer compartments.
- The doors were opened frequently or kept open for long periods. >>> Do not open the doors too frequently.
- The door may be ajar. >>> Fully close the door.
- The product may have been recently plugged in or a new food item is placed inside. >>> This is normal. The product will take longer to reach the set temperature when recently plugged in or a new food item is placed inside.
- Large quantities of hot food may have been recently placed into the product. >>> Do not place hot food into the product.

Shaking or noise.

- The ground is not level or durable. >>> If the product is shaking when moved slowly, adjust the stands to balance the product. Also make sure the ground is sufficiently durable to bear the product.
- Any items placed on the product may cause noise. >>> Remove any items placed on the product.

The product is making noise of liquid flowing, spraying etc.

- The product's operating principles involve liquid and gas flows. >>> This is normal and not a malfunction.

There is sound of wind blowing coming from the product.

- The product uses a fan for the cooling process. This is normal and not a malfunction.

There is condensation on the product's internal walls.

- Hot or humid weather will increase icing and condensation. This is normal and not a malfunction.
- The doors were opened frequently or kept open for long periods. >>> Do not open the doors too frequently; if open, close the door.
- The door may be ajar. >>> Fully close the door.

There is condensation on the product's exterior or between the doors.

- The ambient weather may be humid, this is quite normal in humid weather. >>> The condensation will dissipate when the humidity is reduced.

The interior smells bad.

Troubleshooting

- The product is not cleaned regularly. >>> Clean the interior regularly using sponge, warm water and carbonated water.
- Certain holders and packaging materials may cause odour. >>> Use holders and packaging materials without free of odour.
- The foods were placed in unsealed holders. >>> Keep the foods in sealed holders. Micro-organisms may spread out of unsealed food items and cause malodour. Remove any expired or spoilt foods from the product.

The door is not closing.

- Food packages may be blocking the door. >>> Relocate any items blocking the doors.
- The product is not standing in full upright position on the ground. >>> Adjust the stands to balance the product.
- The ground is not level or durable. >>> Make sure the ground is level and sufficiently durable to bear the product.

The vegetable bin is jammed.

- The food items may be in contact with the upper section of the drawer. >>> Reorganize the food items in the drawer.



WARNING: If the problem persists after following the instructions in this section, contact your vendor or an Authorised Service. Do not try to repair the product.

57 7656 0000/AC