TRICITY BENDIX

OPERATING & INSTALLATION INSTRUCTIONS



REFRIGERATOR

TB 59 L

1312552

A/T/8-3. (01.)

Download from Www.Somanuals.com. All Manuals Search And Download.

This instruction book contains safety precautions, information on use and helpful hints and tips.

To ensure you use this appliance effectively and safely, please read this instruction book carefully before installing or using this appliance and retain for future reference.

The symbols below help you to find things more easily:



Safety precautions
Warnings and Safety information



Hints, useful information



Environmental information

Download from Www.Somanuals.com. All Manuals Search And Download.

IMPORTANT SAFETY INSTRUCTIONS

These warnings are provided in the interests of your safety. Ensure that you understand them all before installing or using this appliance. Your safety is of paramount importance. If you are unsure about any of the meanings or these warnings contact the Customer Care Department.

Prior to installation

- Check the appliance for transport damage. Under no circumstances should a damaged appliance be installed. In the event of damage please contact your retailer.

Installation

- This appliance is heavy. Care should be taken when moving it.
- It is dangerous to alter the specifications or attempt to modify this product in any way.
- Ensure that the appliance does not stand on the electrical supply cable. If the supply cable is damaged, it must be replaced by a cable available from your local Service Force Centre.
- Any electrical work required to install this appliance should be carried out by a qualified electrician or competent person.
- Parts which heat up should not be exposed. Whenever possible, the back of the appliance should be close to a wall, but leaving the required distance for ventilation, as stated in the installation instructions.
- The appliance should be left for 2 hours after installation before it is turned on, in order to allow the refrigerant to settle.

Child Safety

- Do not allow children to tamper with the controls or play with the product.
- There is a risk of suffocation! Keep packaging material away from children!

During Use

- This appliance is designed for domestic use only, specifically for the storage of edible foodstuffs. It is not intended for commercial or industrial use.

Maintenance and Cleaning

- Before cleaning, always switch off the appliance and disconnect from the electrical supply.
- When unplugging always pull the plug from the mains socket, do not pull on the cable.

Servicing

- This product should be serviced by an authorised engineer and only genuine spare parts should be used.
- Under no circumstances should you attempt to repair the appliance yourself. Repairs carried out by inexperienced persons may cause injury or serious malfunctioning. Contact your local Service Force Centre.

At the end of the Appliance Life

- When disposing of your appliance use an authorised disposal site.
- Remove the plug and ensure that any locks or catches are removed, to prevent young children being trapped inside.

The Appliance and the Environment

This appliance does not contain gasses which could damage the ozone layer.

Avoid damaging the cooling unit.

The packaging used on this appliance marked with the symbol is recyclable.

Keep this instruction book for future reference and ensure it is passed on to any new owner.

Download from Www.Somanuals.com. All Manuals Search And Download.

CONTENTS

Instructions for the User

Guide to use the instruction book **2**

Important Safety Instructions **3**

Instructions for the User **5**
General Information 5
Description of the Appliance, main parts 5

Using the Appliance **6**
Before Use 6
To Start the Appliance 6
Thermostat Control 6
Hints for storage 6
Storage Shelves 7

Hints and Tips **7**
Food Storage 7
Energy Saving Advice 7

Maintenance and Cleaning **7**
Internal cleaning 7
External cleaning 8
Changing the Light Bulb 8
Defrosting Your Appliance 8
When the appliance is not in use 8

Something not Working **9**

Service and Spare Parts **10**

Customer Care **10**

Guarantee Conditions **11**

Instructions for the Installer

Technical specifications **14**

Installing the Appliance **14**
Transportation, Unpacking 14
Cleaning 14
Location 14
Ventilation Requirements 15
Levelling 15
Door Reversal 15

Electrical Connection **17**

Storage Chart **18**

Download from Www.Somanuals.com. All Manuals Search And Download.

INSTRUCTIONS FOR THE USER

General information

This appliance is designed for the refrigeration of food in a domestic home.

To ensure correct operation, the appliance should be located where the ambient temperature is between 16-32 °C.

Description of the appliance, main parts

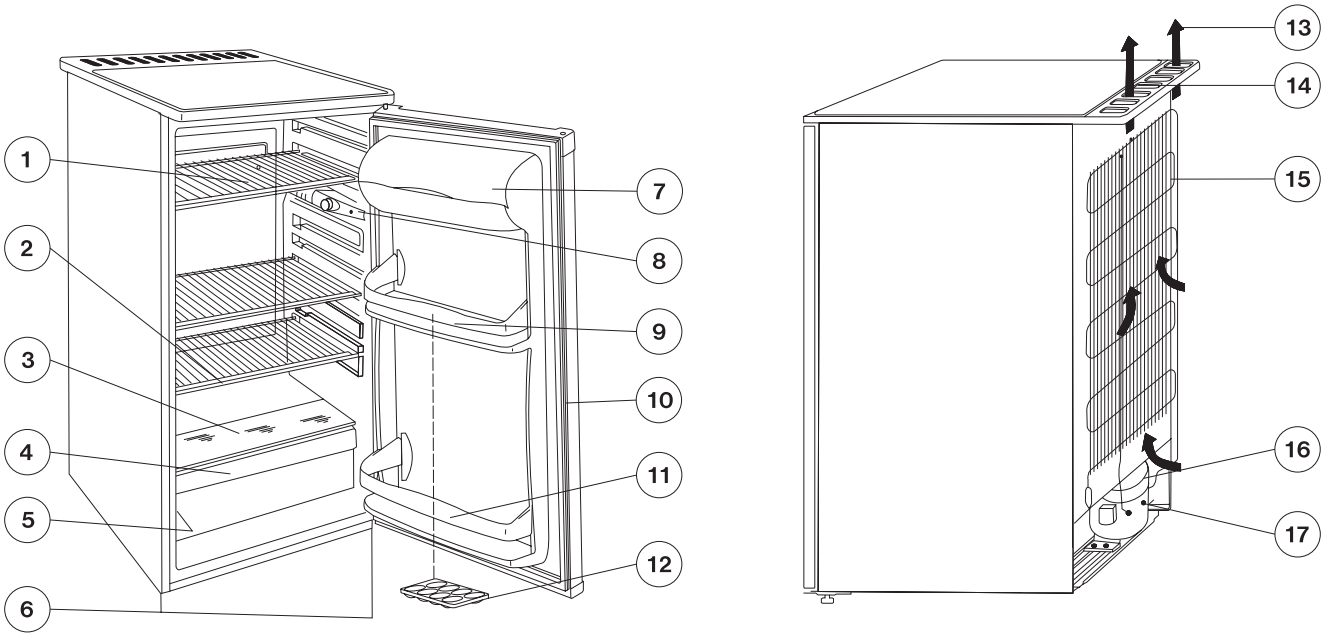

1. Wire shelf
2. Defrost water drain
3. Glass shelf
4. Salad drawer
5. Rating Plate
6. Adjustable feet
7. Butter compartment
8. Interior Light/Thermostat control
9. Door shelf
10. Door gasket
11. Bottle shelf
12. Egg tray
13. Air circulation
14. Air vent
15. Condenser
16. Evaporator tray
17. Compressor

Download from Www.Somanuals.com. All Manuals Search And Download.

Using the Appliance

Before Use

Remove all securing tapes.
Wash the inside of the appliance with lukewarm water with a little bicarbonate of soda added (5 ml to 0,5 litre of water). Do not use soap or detergent as the smell may linger. Dry the appliance thoroughly.

⚠ *Do not use detergents, abrasive powders, highly perfumed cleaning products, wax polishes or products containing alcohol.*

☞ To Start the Appliance

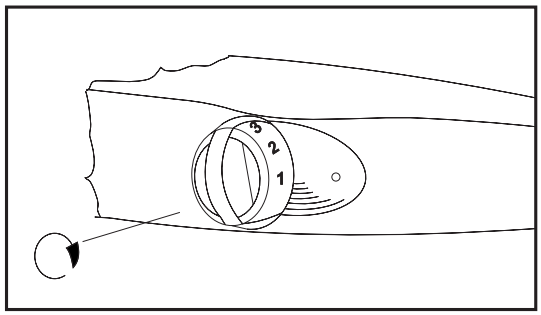

1. Allow the appliance to stand for 2 hrs after installation.
2. Plug in the appliance and switch on at the mains supply.
3. Turn the thermostat control to the required setting. A setting of 3 is usually suitable for normal operation (see thermostat control).
4. Leave the appliance for approximately 4 hours for the correct temperature to be reached before placing food inside.

Thermostat Control

The thermostat control situated inside the refrigerator regulates the temperature of the larder compartment. Thermostat control is marked from 1-5 the higher the number, the colder the setting.

Position 0 - Off

Position 1 - Cold

Position 5 - Coldest

Hints for storage

Below is the recommended storage positions for various food types:

1. Ready-cooked foods, convenience foods, fresh meat, cold cuts
2. Milk, dairy products, foods in dishes
3. Fruits, vegetables, salads
4. Cheese, butter
5. Eggs
6. Yoghurt, sour cream
7. Small bottles, soft drinks
8. Large bottles, drinks

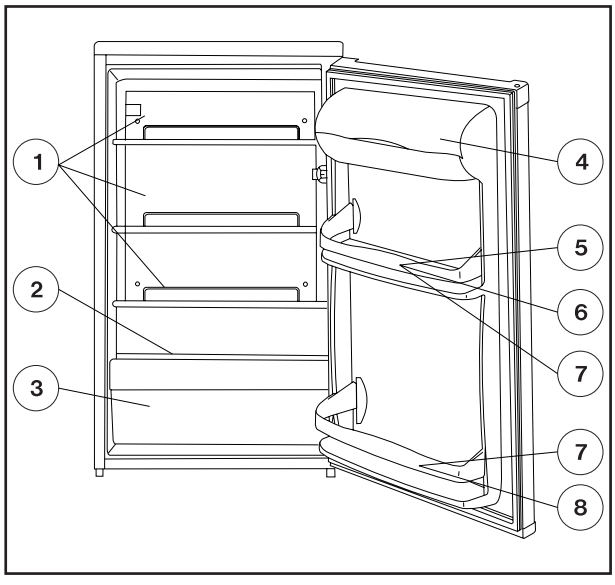

Download from Www.Somanuals.com. All Manuals Search And Download.

Storage Shelves

The variable shelves increase the usefulness of the fresh food compartment. The shelves can be rearranged by opening the door to 90°.

The door shelves can also be rearranged to your requirements.

ⓘ Hints & Tips

Food Storage

- To obtain the best results from your appliance neither hot foods nor liquids which may evaporate, should be placed in the larder compartment.
- Keep the time between buying chilled food and placing it in your fridge as short as possible.
- Do not push food together too much, try to allow air to circulate around each item.
- Do not store food uncovered.
- Remove suspect food from your refrigerator and clean, refer to cleaning and maintenance.

Energy Saving Advice

- Do not install the cabinet close to sources of heat, such as a cooker, dishwasher or radiator.
- Locate the appliance in a cool well ventilated room and make sure that the air openings of the cabinet are not obstructed.
- Always leave warm food to cool down to room temperature before placing in the fridge.
- Try to avoid keeping the door open for long periods, or opening the door too frequently as warm air will enter the cabinet, and cause the compressor to switch on unnecessarily often.
- Ensure there are no obstructions preventing the door from closing properly.
- It is advisable to periodically clean the refrigeration system at the back of the appliance with a duster or vacuum cleaner.

Maintenance & Cleaning

⚠ *Before any maintenance of cleaning work is carried out DISCONNECT the appliance from the ELECTRICITY SUPPLY.*

Internal Cleaning

Clean the inside and accessories with warm water and bicarbonate of soda (5 ml to 0.5 litre of water). Rinse and dry thoroughly.

⚠ *Do not use detergents, abrasive powders, highly perfumed cleaning products, wax polishes or cleaning products containing bleach or alcohol.*

Clean the drain hole of the water trough at regular intervals and ensure that the drain hole is clear at all times. If blocked carefully clear using a piece of flexible curtain wire inserted into the drain outlet to remove the blockage.

Regularly check the door seals and wipe clean to ensure they are clean and free from debris.

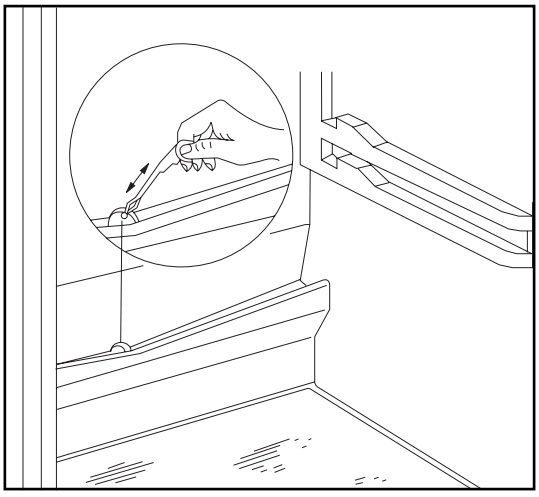

Download from Www.Somanuals.com. All Manuals Search And Download.

External Cleaning

Wash the outer cabinet with warm soapy water.

Do NOT use abrasive products.
There are sharp edges on the underside of the product so care should be taken when cleaning.

Once or twice a year dust the condenser (black grille) and the compressor at the back of the appliance with a brush or vacuum cleaner, as an accumulation of dust will affect the performance of the appliance and cause excessive electricity consumption.

Changing the Light Bulb

Should the light fail to work you can change it as below:

Disconnect the appliance from the electricity supply.

Remove the lamp cover retaining screws, then take the lamp cover off in the direction of arrow and the bulb can be changed. (Type of the bulb: 230 V, 15 W, E 14 thread)

After changing bulb replace the lamp cover, and retaining screws and reconnect the appliance to the electricity supply.

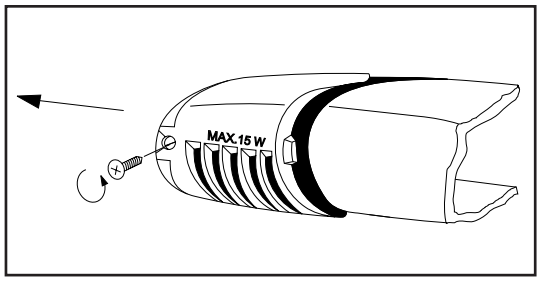

Defrosting Your Appliance

The fridge compartment is defrosted automatically, when the motor stops. Defrost water from the cooling plate runs out of the drain and onto a tray on the motor compressor where it evaporates. Droplets of water on the cooling plate during defrosting are quite normal and will freeze on the plate afterwards.

When the appliance is not in use

When the appliance is not in use for long periods disconnect from the electricity supply, empty all of the food and clean the appliance, leaving the door ajar to prevent unpleasant smells.

Download from Www.Somanuals.com. All Manuals Search And Download.

Something Not Working

If the appliance is not working correctly, please carry out the following checks before contacting your local Tricity Bendix Service Force Centre.

Problem	Possible Cause	Solution
No power to the appliance	No power at the socket.	Check there is power at the socket.
	There is a power cut.	Check there is not a power cut by checking the household lights.
	The fuse has blown.	Check the fuse has not blown.
	Thermostat control is set at „0“.	Check the thermostat setting.
The temperature in the appliance is too high	The appliance is located in an unsuitable position.	Check the ambient temperature is within the appliances operating limits of 16 °C to 32 °C.
	The thermostat control is set too low.	Check that the thermostat control knob is turned to the correct setting relative to ambient conditions.
The temperature in the appliance is too low	The thermostat control is set too high.	Set the thermostat control knob to a warmer position.
Excessive frost and ice has built up	The door has been left open.	Check the door has not been left open.
	Something is obstructing the door.	Check nothing is preventing the door from closing.
	The door gasket is dirty.	Check the door gasket is intact and clean.
The appliance is noisy.	The appliance is not level.	Check if the appliance stands stable (all four feet should be on the floor).
Water under the salad drawer.	The drain hole is blocked.	Check the drain hole is not blocked (see 'Maintenance and Cleaning').

If after the above checks your appliance still does not operate correctly, contact your local Tricity Bendix Service Force Centre.

Please note that it will be necessary to provide proof of purchase for any in-guarantee service calls.

In-guarantee customers should ensure that the above checks have been made, as the engineer will make a charge if the fault is not a mechanical or electrical breakdown.

Download from Www.Somanuals.com. All Manuals Search And Download.

Service and Spare Parts

In the event of your appliance requiring service, or if you wish to purchase spare parts please contact your local Tricity Bendix Service Force Centre by telephoning:

0870 5 929929

Your call will be routed the Service Force Centre covering your post code area.

For service in the **Republic of Ireland** contact Tricity Bendix
Long Mile Road
Dublin 12

Telephone: 01 4090752.

Before calling out an engineer, please ensure you have read the details under the heading 'Something Not Working?'.

When you contact the Service Centre you will need to give the following details:

1. Your name, address and post code
2. Your telephone number
3. Clear and concise details of the fault
4. The model and serial number of the appliance (found on the rating plate)
5. The purchase date

Customer Care Department

For general enquiries concerning your Tricity Bendix appliance or for further information on Tricity Bendix products, you are invited to contact our Customer Care Department by letter or telephone as follows:

Customer Care Department
Tricity Bendix
55-77 High Street
Slough
Berkshire
SL1 1DZ

Tel: 08705 950950 calls to this number may be recorded for training purposes.

Download from Www.Somanuals.com. All Manuals Search And Download.

Peace of Mind for Twelve Months

Tricity Bendix standard guarantee conditions

This guarantee is in addition to your statutory and other legal rights.
We Tricity Bendix undertake that if within 12 months of the date of the purchase this TRICITY BENDIX appliance or any part thereof is proved to be defective by reason only of faulty workmanship or materials, we will, at our option repair or replace the same FREE OF ANY CHARGE for labour, materials or carriage on condition that:

- The appliance has been installed correctly and used only on the electrical supply stated on the rating plate.
- The appliance has been used for normal domestic purposes only, and in accordance with the manufacturer's operating and maintenance instructions.
- The appliance has not been serviced, maintained, repaired, taken apart or tampered with by any person not authorised by us.
- All service work under this guarantee must be undertaken by a Tricity Bendix service Representative or authorised agent.
- Any appliance or defective part replaced shall become our property.

Home visits are made between **8.30am** and **5.30pm Monday to Friday.** Visits may be available outside these hours in which case a charge will be made.

EXCLUSIONS

This Guarantee does not cover:

- Damage or calls resulting from transportation, improper use or neglect, the replacemet of any light bulbs or removable parts of glass or plastic.
- Costs incurred for calls to put right an appliance which is improperly installed or calls to appliances outside the United Kingdom.
- Appliances found to be in use within a commercial environment, plus those which are the subject of rental agreements.
- Products of Tricity Bendix manufacture which are NOT marketed by Tricity Bendix Ltd.

EUROPEAN GUARANTEE

If you should move to another country within Europe then your guarantee moves with you to your new home subject to the following qualifications:

- The guarantee starts from the date you first purchased your product.
- The guarantee is for the same period and to the same extent for labour and parts as exists in the new country of use for this brand or range of products.
- This guarantee relates to you and cannot be transferred to another user.
- Your new home is within the European Community (EC) or European Free Trade Area.
- The product is installed and used in accordance with our instructions and is only used domestically, i.e. a normal household.

Before you move please contact your nearest Customer Care Centre, list below, to give them details of your new home. They will then ensure that the local Service Organisation is aware of your move and able to look after you and your appliances.

France	Senlis	+33 (0) 3 44 62 28 28
Germany	Nurnberg	+49 (0) 911 323 2600
Italy	Pordenone	+39 (0) 1678 47053
Sweden	Stockholm	+46 (0) 20 78 77 50
UK	Slough	+44 (0) 1753 219898

Download from Www.Somanuals.com. All Manuals Search And Download.

SERVICE FORCE

To contact your local Service Force Centre telephone 08705 929 929

CHANNEL ISLANDS

GUERNSEY	Guernsey Electricity PO Box 4 Vale, Guernsey Channel Islands GY1 3AD
JERSEY	Jersey Electricity Company Haut De L'orme Rue De Haut De L'orme Trinity Jersey Channel Islands JE3 5FG

SCOTLAND

ABERDEEN	54 Claremont Street Aberdeen AB10 6RA
AUCHTERMUCHTY	33a Burnside Auchtermuchty Fife KY14 7AJ
BLANTYRE	Unit 5 Block 2 Auchenraith Ind. Estate Rosendale Way Blantyre G72 0NJ
DUMFRIES	93 Irish Street Dumfries DG1 2 PQ
DUNOON	7 Hill Street Dunoon Argyll PA23 7AL
EDINBURGH	Unit 12 Dumbryden Ind. Estate 2 Dumbryden Road Edinburgh EH14 2AB
GLASGOW	Unit 4 Wellington Road Bishopriggs Glasgow G64 2SA
INVERNESS	Unit 3BI Smithton Ind. Estate Smithton Inverness IV2 7WL
ISLE OF ARRAN	Arran Domestics The Douglas Centre Brodick Isle of Arran KA27 8AJ
ISLE OF BARRA	J Zerfah 244 Bruernish Isle of Barra Western Islands HS9 5QY
ISLES OF BUTE	Walker Engineering Glenmhor Upper Serpentine Road Rothesay Isle of Bute PA20 9EH
ISLE OF LEWIS	ND Macleod 16 James Street Stornoway Isle of Lewis PA87 2QW
KELSO	2, 6 & 8 Woodmarket Kelso Borders TD5 7AX
ORKNEY	7 King Street Kirkwall Orkney KW15 1JF
PERTH (OWN SALES)	Scottish Hydro Electric Central Warehouse Inveralmond Perth PH1 3AF
SHETLAND (OWN SALES)	3-4 Carlton Place Lerwick Shetland ZE1 0PW
SHETLAND (OWN SALES)	Bolts Shetland 26 North Road Lerwick Shetland ZE1 0PE
WHALSAY (OWN SALES)	Leask Electrical Harisdale Symbister, Whalsay Shetland ZE2 9AA

NORTHERN IRELAND

BELFAST	Owenmore House Kilwee Business Park Dunmurry Belfast BT17 0HD

WALES

CARDIFF	Unit 4 Guardian Industrial Estate Clydesmuir Road Cardiff CF2 2QS
CLYWD	Unit 6-7 Coed Parc Abergele Road Rhuddlan Clwyd LL18 5UG
DYFED	Unit 9 St. Clears Business Park Tenby Road St. Clears Carmarthen SA33 4JW
OSWESTRY	Plas Ffynnon Warehouse Middleton Road Oswestry SY11 2PP

NORTH EAST

GATESHEAD	Unit 356a Dukesway Court Dukesway Gateshead NE11 0BH
GRIMSBY	15 Hainton Avenue Grimsby N. E. Lincs DN32 9AS
HULL	Unit 1 Boulevard Industrial Estate Hull HU3 4AY
LEEDS	64-66 Cross Gates Road Cross Gates Leeds LS15 7YS
NEWTON AYCLIFFE	Unit 23 Northfield Way Aycliffe Industrial Park Newton Aycliffe DL5 6EJ
SHEFFIELD	Pennine House Roman Ridge Road Sheffield S9 1GB

NORTH WEST

BIRKENHEAD	1 Kelvin Park Dock Road Birkenhead CH41 1LT
CARLISLE	Unit 7 James Street Workshops James Street Carlisle Cumbria CA2 5AH
ISLE OF MAN	South Quay Ind. Estate Douglas Isle of Man IM1 5AT
BOLTON	Unit B Central Industrial Estate St Marks Street Bolton BL3 6NR
PRESTON	Unit 250 Dawson Place Bamber Bridge Preston Lancashire PR5 8AL
STOCKPORT	Unit 20 Haigh Park Haigh Avenue Stockport SK4 1QR

Download from Www.Somanuals.com. All Manuals Search And Download.

SERVICE FORCE

To contact your local Service Centre telephone 08705 929 929

MIDLANDS

BIRMINGHAM	66 Birch Road East Wyrley Trading Estate Witton Birmingham B6 7DB
BOURNE	Pinfold Road Bourne PE10 9HT
BRIDGNORTH	68 St. Mary's Street Bridgnorth Shropshire WV16 4DR
GLOUCESTER	101 Rycroft Street Gloucester GL1 4NB
HEREFORD	Units 3 & 4 Bank Buildings Cattle market Hereford HE4 9HX
HIGHAM FERRERS	30 High Street Higham Ferrers Northants NN10 8PL
ILKESTON	Unit 2 Furnace Road Ilkeston DE7 5EP
LEICESTER	Unit 7 Oaks Industrial Estate Coventry Road Narborough Leicestershire LE9 5GF
LINCOLN	Unit 8 Clifton Street Stone Field Park Lincoln LN5 8LQ
NEWCASTLE UNDER LYME	18-21 Croft Road Brampton Ind. Estate Newcastle under Lyme Staffordshire ST5 0TW
REDDITCH	13 Thornhill Road North Moons Moat Redditch Worcestershire B98 9ND
TAMWORTH	Unit 3 Sterling Park Claymore Tamworth B77 5DQ
WORCESTER	Units 1 & 2 Northbrooks Close Gregorys Mill Ind. Estate Worcester WR3 8BP

LONDON & EAST ANGLIA

BECKENHAM	11a Gardner Ind. Estate Kent House Lane Beckenham Kent BR3 1QZ
CHELMSFORD	Hanbury Road Widford Ind. Estate Chelmsford Essex CM12 3AE
COLINDALE	Unit 14 Capitol Park Capitol Way Colindale London NW9 0EQ
ELTHAM	194 Court Road Mottingham Eltham London SE9 4EW
ENFIELD	284 Alma Road Enfield London EN3 7BB
GRAVESEND	Unit B4 Imperial Business Estate West Mill Gravesend Kent DA11 0DL
IPSWICH	Unit 6C Elton Park Business Centre Hadleigh Road Ipswich IP2 0DD
LETCHWORTH	16-17 Woodside Ind. Park Works Road Letchworth Herts SG6 1LA
LONDON	2 - 4 Royal Lane Yiewsley West Drayton Middlesex UB7 8DL
MAIDENHEAD	Reform Road Maidenhead Berkshire SL6 8BY
MOLESEY	10 Island Farm Avenue West Molesey Surrey KT8 2UZ
NEWBURY	9 Pipers Court Berkshire Drive Thatcham Berkshire RG19 4ER
NORWICH	2b Trafalgar Street Norwich NR1 3HN
SUNBURY	Unit 1a The Summit Hanworth Road Sunbury on Thames TW16 5DB

SOUTH EAST

ASHFORD	Unit 2 Bridge Road Business Centre Bridge Road Ashford Kent TN23 1BB
FLEET	Unit 1 Redfields Ind. Estate Church Crookham Fleet Hampshire GU13 0RD
HAYWARDS HEATH	21-25 Bridge Road Haywards Heath Sussex RH16 1UA
TONBRIDGE	Unit 30 Deacon Trading Estate Morley Road Tonbridge TN9 1RA

SOUTH WEST

BARNSTAPLE	Main Road Fremington Barnstaple North Devon EX31 2NT
BOURNEMOUTH	63-65 Curzon Road Bournemouth Dorset BH1 4PW
BRIDGEWATER	6 Herswell Business Park Salmon Parade Bridgwater Somerset TA6 5PY
BRISTOL	11 Eldon Way Eldonwall Trading Estate Bristol BS4 3QQ
EMSWORTH	266 Main Road Southbourne Emsworth PO10 8JL
ISLE OF WIGHT	Unit 8 Enterprise Court Ryde Business Park Ryde Isle of Wight PO33 1DB
NEWTON ABBOT	Unit 2 Zealley Ind. Estate Kingsteignton Newton Abbot TQ12 3TD
REDRUTH	Unit 7D Pool Ind. Estate Druids Road Redruth Cornwall TR15 3RH

Download from Www.Somanuals.com. All Manuals Search And Download.

Instructions for the Installer

Technical data

Model	TB 59 L
Gross capacity (l)	Fresh food com.: 159
Net capacity (l)	Fresh food com.: 148
Width (mm)	550
Height (mm)	850
Depth (mm)	600
Energy consumption (kWh/day)	0.60
(kWh/year)	219
Energy class, according to EU Standards	C
Rated power (W)	100
Weight (kg)	34

Installing the appliance

Transportation, unpacking

The appliance and the interior fitting are protected for transport.

- Remove all packaging and any adhesive tape.
- Any remnants of adhesive can be removed using white spirit.
- After transportation the appliance must not be switched on for 2 hours. This is to allow the refrigerant to settle.

Cleaning

Clean the accessories and the inside of the appliance with warm water and bicarbonate of soda (5 ml to 0.5 litres of water). Rinse and dry thoroughly.

Do not use detergents, abrasive powders, highly perfumed cleaning products, wax polishes or cleaning products containing bleach or alcohol.

Location

The appliance should be positioned in a well ventilated, dry room.

Energy use is affected by the ambient temperature.

The appliance should therefore:

- not be installed next to radiators, cookers or other sources of heat
- only be installed at a location where the ambient temperature corresponds to the climate classification, for which the appliance is designed.

The climate classification can be found on the serial plate.

The following table shows which ambient temperature is correct for each climate classification:

Climate Classification	Ambient Temperature
SN	+10 to +32 °C
N	+16 to +32 °C
ST	+18 to +38 °C

Download from Www.Somanuals.com. All Manuals Search And Download.

Ventilation Requirements

The appliance must have adequate ventilation to ensure correct operation.

Diagram shows the ventilation requirements when installed:

A* Under a worktop, or cupboard.

* The clearance space of 10 cm above the appliance may be reduced to 5 cm providing a clearance space 2.5 cm is left on either side of the appliance.

B When freestanding

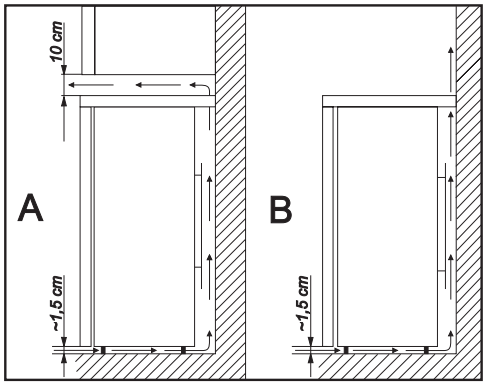

Levelling

The appliance must be level. Level the appliance by adjusting the two adjustable feet (1) at the front of the appliance.

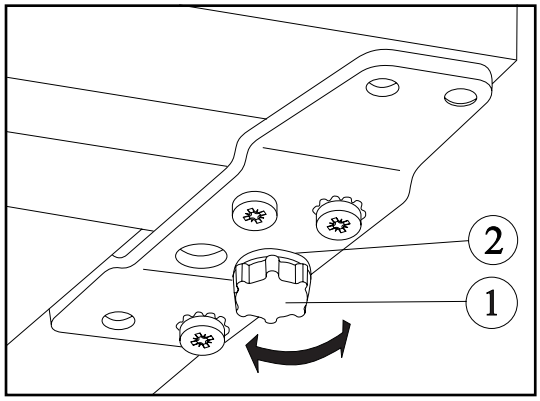

Door Reversal

If required the opening direction of the door can be changed as follows:

To reverse the bottom hinge assembly proceed as follows:

- Disconnect the appliance from the electricity supply.
- Tilt the appliance backwards, resting the top edge of the appliance on a stool or something similar.
- Unscrew the adjustable feet situated on both sides at the front (2 pieces). Remove the lower door hinge plate by unscrewing the 3 retaining screws.
- Remove the hinge pin from the bottom of the door.
- Slot the hinge pin into the hole in the hinge plate and relocate the hinge assembly to the opposite location and refit using the retaining screws.
- Put the cabinet in the upright position.

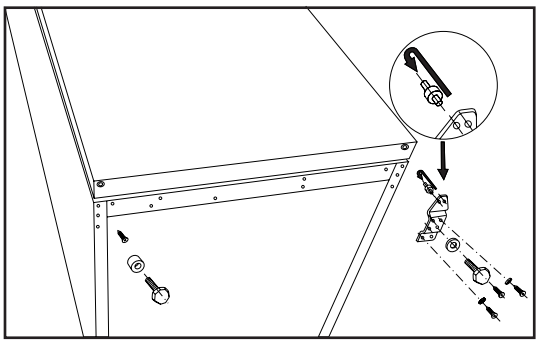

Download from Www.Somanuals.com. All Manuals Search And Download.

To reverse the top hinge assembly proceed as follows:

- Remove the 2 worktop retaining screws from the back of the appliance.
- Slide the worktop towards the rear and lift clear of the appliance.

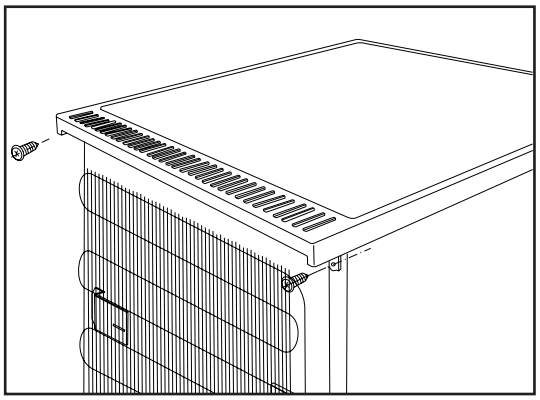

- Remove the 2 upper hinge plate retaining screws.
- Remove the hinge plate from the top of the door.
- Unscrew the hinge pin from the hinge plate and re-insert on the opposite side of the pate.
- Rotate the hinge assembly 180° and insert the hinge assembly into the opposite location.
- Refit the 2 hinge plate retaining screws.
- Relocate the worktop and refit the worktop retaining screws.

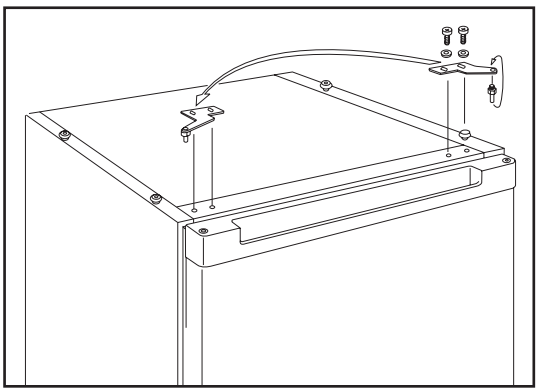

Download from Www.Somanuals.com. All Manuals Search And Download.

Electrical Connection

Any electrical work required to install this appliance should be carried out by a qualified electrician or competent person.

This appliance must be earthed.

The manufacturer declines any liability should these safety measures not be observed.

Electrical Requirements

Before switching on, make sure the electricity supply voltage is the same as that indicated on the appliance rating plate.

The appliance is supplied with a 13 amp plug fitted. In the event of having to change the fuse in the plug supplied, a 13 amp ASTA approved (BS 1362) fuse must be used. Should the plug need to be replaced for any reason. The wires in the mains lead are coloured in accordance with the following code:

Green and Yellow:	Earth
Blue:	Neutral
Brown:	Live

The wire coloured green and yellow must be connected to the terminal marked with the letter „E“ or by the earth symbol ⏚ or coloured green and yellow.

The wire coloured blue must be connected to the terminal „N“ or coloured black.

The wire coloured brown must be connected to the terminal marked „L“ or coloured red.

Upon completion there must be no cut, or stray strands of wire present and the cord clamp must be secure over the outer sheath.

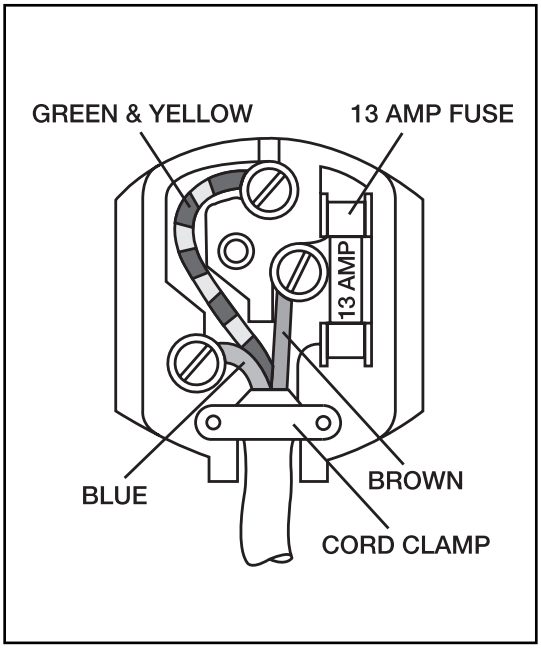

CE This appliance complies with the following E.E.C. Directives:

- **73/23 EEC** of 19.02.73 (Low Voltage Directive) and subsequent modifications,
- **89/336 EEC** of 03.05.89 (Electromagnetic Compatibility Directive) and subsequent modifications.

Download from Www.Somanuals.com. All Manuals Search And Download.

Storage time chart

Time and method of storage of fresh foods in the refrigerator

Foods	Storage time in days							Method of packaging
	1	2	3	4	5	6	7	
Raw meat	**X**	**X**	x	x	x			cling film, airtight
Cooked meat	**X**	**X**	**X**	x	x	x		dish covered
Roasted meat	**X**	**X**	**X**	x	x			dish covered
Raw minced meat	**X**							dish covered
Cooked minced meat	**X**	**X**	x	x				dish covered
Cold cuts	**X**	**X**	x	x				cling film, cellophane, grease-proof paper
Fresh fish	**X**	x	x					cling film, airtight
Cooked fish	**X**	**X**	x	x				dish covered
Tinned fish, open	**X**	x	x					dish covered
Fresh chicken	**X**	**X**	**X**	x	x	x		cling film, airtight
Fried chicken	**X**	**X**	**X**	x	x	x		dish covered
Fresh duck, goose	**X**	**X**	**X**	x	x	x		cling film, airtight
Roasted duck, goose	**X**	**X**	**X**	**X**	x	x	x	dish covered
Butter unopened	**X**	**X**	**X**	**X**	**X**	**X**	**X**	original packaging
Butter opened	**X**	**X**	x	x	x	x	x	original packaging
Milk	**X**	**X**	**X**	x	x			original packaging
Cream	**X**	**X**	x	x				plastic box
Sour cream	**X**	**X**	**X**	**X**	x	x	x	plastic box
Cheese (hard)	**X**	**X**	**X**	**X**	**X**	**X**	**X**	aluminium foil
Cheese (soft)	**X**	**X**	**X**	**X**	x	x	x	cling film
Egg	**X**	**X**	**X**	**X**	**X**	**X**	**X**	
Spinach, sorrel	**X**	**X**	x	x				cling film
Green peas, green beans	**X**	**X**	**X**	**X**	x	x	x	cling film
Mushroom	**X**	**X**	x	x	x			cling film
Carrot	**X**	**X**	**X**	**X**	**X**	**X**	**X**	cling film
Tomato	**X**	**X**	**X**	**X**	**X**	**X**	**X**	cling film
Cabbage	**X**	**X**	**X**	**X**	**X**	x	x	cling film
Strawberry, raspberry, etc.	**X**	**X**	**X**	x	x			cling film
Tinned fruits opened	**X**	**X**	**X**	x	x			dish covered
Cakes filled with cream	**X**	**X**	x	x				dish covered

Notation:

X recommended storage time
x maximum recommended storage time

Download from Www.Somanuals.com. All Manuals Search And Download.

Download from Www.Somanuals.com. All Manuals Search And Download.

The Electrolux Group is the world's largest producer of powered appliances for kitchen, cleaning and outdoor use. More than 55 million Electrolux Group products (such as refrigerators, cookers, vacuum cleaners, chain saws and lawn mowers) are sold each year to a value of approx. 14 billion USD in more than 150 countries around the world.

From the Electrolux Group. *The world's No.1 choice.*

© Electrolux Household Appliances Limited 2000

Printed by Xerox Hungary Ltd.

Download from Www.Somanuals.com. All Manuals Search And Download.

Free Manuals Download Website

http://myh66.com

http://usermanuals.us

http://www.somanuals.com

http://www.4manuals.cc

http://www.manual-lib.com

http://www.404manual.com

http://www.luxmanual.com

http://aubethermostatmanual.com

Golf course search by state

http://golfingnear.com

Email search by domain

http://emailbydomain.com

Auto manuals search

http://auto.somanuals.com

TV manuals search

http://tv.somanuals.com