GRUNDIG

Refrigerator

User manual

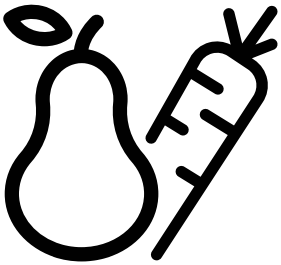

GKNG3691DG - GKNG3691 G

CE

EN /

58 4592 0000/AC

ENG

Contents

1. Important instructions for safety and environment 5

1.1 General safety 5
1.1.1 HC warning 7
1.1.2 For products with a water dispenser 7
1.2 Intended use 8
1.3 Children's safety 8
1.4 Compliance with WEEE Directive and Disposing of the Waste Product: 8
1.5 Compliance with RoHS Directive: 8
1.6 Package information 9

2. Your Refrigerator 10

3. Installation 11

3.1 Appropriate installation location 11
3.2 Installing the plastic wedges 12
3.3 Electrical connection 12

4. Preparation 15

4.1 Things to be done for energy saving 15
4.2 Initial use 16

5 . Using your refrigerator 17

5.1 Thermostat setting button 17
5.2 Defrost 18
5.3 Freezing fresh food 19
5.4 Recommendations for preservation of frozen food 19
5.5 Changing the door opening direction 21
5.6 Open door warning 21
5.7 Changing the illumination lamp 21
5.8 Recommendations for freshfood compartment 22
5.9 Chiller Shelf And Vegetable Compartment 22
5.10 Using the water dispenser 23
5.11 Filling the water dispenser's tank 24
5.12 Cleaning the water tank ... 24
5.13 Drip tray 25

6 . Maintenance and cleaning 26

6.1 Avoiding bad odours 26
6.2 Protecting the plastic surfaces 27

7. Troubleshooting 28

Please read this manual first!

Dear Customer,

We hope that your product, which has been produced in a 1st-class manufacturing facility and checked under the most meticulous quality control procedures, will provide you with years of good service.

For this, we recommend you to carefully read the entire manual of your product before using it and keep it at hand for future references.

This manual

- Will help you use your appliance in a fast and safe way.
- Read the manual before installing and operating your product.
- Follow the instructions, especially those for safety.
- Keep the manual in an easily accessible place as you may need it later.
- Also read any other documents provided with this product

Please note that this manual may be valid for other models as well.

Symbols and their descriptions

This instruction manual contains the following symbols:

	Important information or useful usage tips.
	Warning against dangerous conditions for life and property.
	Warning against electric voltage.
	Packaging materials of the product are manufactured from recyclable materials in accordance with our National Environment Regulations.

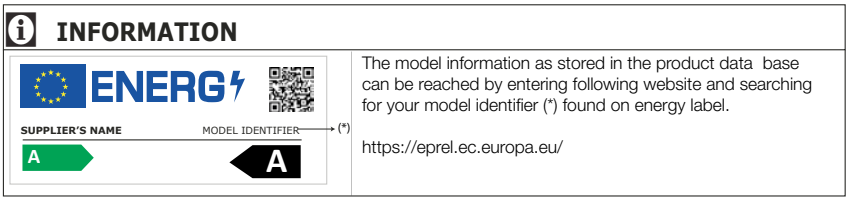

1. Important instructions for safety and environment

This section contains safety instructions that will help protect from risk of personal injury or property damage. Failure to follow these instructions shall void any warranty.

1.1 General safety

- This appliance can be used by children aged from 8 years and above and persons with reduced physical,sensory or mental capabilities or lack of experience and knowledge if they have been given supervision or instruction concerning use of the appliance in a safe way and understand the hazards involved. Children shall not play with the appliance. Cleaning and user maintenance shall not be made by children without supervision.
- Unplug the product if a failure occurs while it is in use.
- If the product has a failure, it should not be operated unless it is repaired by an Authorised Service Agent. There is the risk of electric shock!
- Connect the product to a grounded outlet protected by a fuse complying with the values in the rating plate. Have the grounding installation made by a qualified electrician. Our company shall not be liable for any damages that will arise when the product is used without grounding in accordance with the local regulations.
- Unplug the product when not in use.
- Never wash the product by spreading or pouring water onto it! There is the risk of electric shock!
- Never touch the plug with wet hands! Never unplug by pulling on the cable, always pull out by grabbing the plug.
- Do not plug the refrigerator if the wall outlet is loose.
- Never connect your refrigerator to electricity-saving devices . Such devices are harmful for the product.
- WARNING: When positioning the appliance ensure the supply cord is not trapped or damaged.

- Unplug the product during installation, maintenance, cleaning and repairing procedures.
- Always have repairs carried out by the **Authorised Service Agent**. The manufacturer shall not be held liable for damages that may arise from procedures carried out by unauthorised persons.
- Do not eat ice cream and ice cubes immediately after you take them out of the freezer compartment! This may cause frostbite in your mouth!
- Do not touch frozen food by hand! It may stick to your hand!
- Do not put bottled and canned liquid beverages in the freezer compartment. They may burst!
- Never use steam and steam assisted cleaning materials to clean or defrost the refrigerator. Steam will cause short circuit or electric shock since it would get into contact with the electrical parts in the refrigerator!
- Do not use mechanical devices or other methods to accelerate the defrosting process, other than those recommended by the manufacturer.
- Never use the parts on your refrigerator such as the door and drawer as a means of support or step. This will cause the product to tip over or parts of it to get damaged.
- Do not damage the cooling circuit, where the refrigerant is circulating, with drilling or cutting tools. The refrigerant that might blow out when the gas channels of the evaporator, pipe extensions or surface coatings are punctured may cause skin irritations and eye injuries.
- Do not cover or block the ventilation holes on the refrigerator with any material.
- Keep beverages with a high alcohol content tightly closed and vertically.
- Do not use flammable sprays near the product since there is the risk of fire or explosion!
- Flammable items or products that contain flammable gases (e.g. spray) as well as the explosive materials should never be kept in the appliance.

- Do not place containers filled with liquid on top of the product. Spilling water on an electrical component may cause electric shocks or risk of fire.
- Do not store products (vaccines, heat-sensitive medicines, scientific materials and etc.) that require a precise temperature control in the refrigerator.
- If you will not operate the product for a long period of time, unplug and unload the food in it.
- If the product is equipped with blue light, do not look at the blue light with optical tools.
- Exposing the product to rain, snow, sun and wind is dangerous with respect to electrical safety.
- Do not overload the product. It may fall when the door is opened, and cause injury or damage. Similar problems may occur in case of putting things on top of the product.
- If the product's door is equipped with a handle, do not pull by the handle when moving the product. The handle may get loosened.
- Pay attention not to have your hand or any part of your body get caught by the moving parts inside the product.

1.1.1HC warning

- If the product is equipped with a cooling system containing R600a gas, pay attention not to damage the cooling system and piping during usage and transportation. This gas is flammable. If the cooling system is damaged, keep the product away from potential sources that can cause the system to catch fire and ventilate the room in which the unit is placed immediately.



- WARNING: Never dispose the product in fire.

1.1.2For products with a water dispenser

- Pressure of water mains should be minimum 1 bar and maximum 8 bars.
- Use only potable water.

1.2 Intended use

- This product has been designed for domestic use. It is not suitable for commercial use and it must not be used out of its intended use.
- Product must be used only for storing food.
- The manufacturer waives any responsibility arisen from incorrect usage or transportation.

1.3 Children's safety

- Packaging materials are dangerous for the children. Keep packaging materials in a safe place away from reach of the children.
- Electrical products are dangerous for the children. Keep children away from the product when it is in use.
- If the product's door is equipped with a lock, keep the keys away from reach of children.

1.4 Compliance with WEEE Directive and Disposing of the Waste Product:

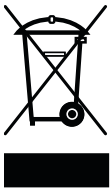

This product complies with EU WEEE Directive (2012/19/EU). This product bears a classification symbol for waste electrical and electronic equipment (WEEE).This product has been manufactured with high quality parts and materials which can be reused and are suitable for recycling. Do not dispose of the waste product with normal domestic and other wastes at the end of its service life. Take it to the collection center for the recycling of electrical and electronic equipment. Please consult your local authorities to learn about these collection centers.

1.5 Compliance with RoHS Directive:

The product you have purchased complies with EU RoHS Directive (2011/65/EU). It does not contain harmful and prohibited materials specified in the Directive.

1.6 Package information

Packaging materials of the product are manufactured from recyclable materials in accordance with our National Environment Regulations. Do not dispose of the packaging materials together with the domestic or other wastes. Take them to the packaging material collection points designated by the local authorities.

2. Your Refrigerator

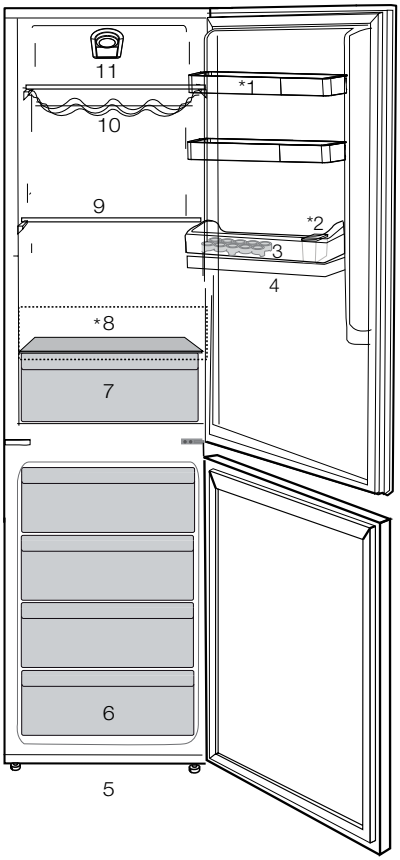

1. Adjustable door shelves
2. Egg section
3. Shelf wire
4. Bottle shelf
5. Adjustable Front Feet
6. Freezing and Storage (store fresh food to be frozen lower down)
7. Vegetable Compartment
8. Chiller shelf
9. Adjustable shelves
10. Wine rack
11. Indicatör Panel

*** May not be available in all models**

ⓘ	Figures in this user manual are schematic and may not match the product exactly. If the subject parts are not included in the product you have purchased, then those parts are valid for other models.

3. Installation

To make the product ready for use, make sure that the electricity installation is appropriate before calling the Authorised Service Agent. If not, call a qualified electrician to have any necessary arrangements carried out.

	Preparation of the location and electrical installation at the place of installation is under customer's responsibility.
	Product must not be plugged in during installation. Otherwise, there is the risk of death or serious injury!
	**WARNING:** Installation and electrical connections of the product must be carried out by competent persons. Manufacturer shall not be held liable for damages that may arise from procedures carried out by unauthorised persons.
	**WARNING:** Prior to installation, visually check if the product has any defects on it. If so, do not have it installed. Damaged products cause risks for your safety.
	Make sure that the power cable is not pinched or crushed while pushing the product into its place after installation or cleaning procedures.

3.1 Appropriate installation location

- Choose a place at where you can access the product comfortably.
- Install the product at least 30 cm away from heat sources such as hobs, ovens, heater cores and stoves and at least 5 cm away from electrical ovens. Product must not be subjected to direct sun light and kept in humid places after installation.
- Appropriate air ventilation must be provided around your product in order to achieve an efficient operation. If the product is to be placed in a recess in the wall, pay

attention to leave at least 5 cm distance with the ceiling and side walls.
- Do not place the product on materials such as rugs or carpets.
- Place the product on an even floor surface to prevent jolts.
- Your product can operate in ambient temperatures between -15°C to +43°C.

3.2 Installing the plastic wedges

Plastic wedges are used to create the distance for the air circulation between the product and the rear wall. Insert the 2 plastic wedges onto the rear ventilation cover as illustrated in the figure. To install the wedges, push and twist a quarter of a turn.

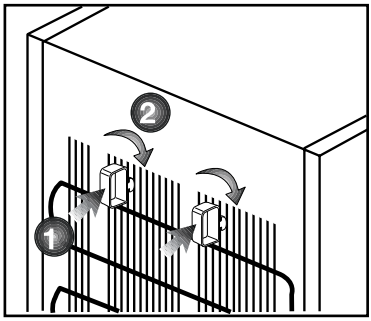

3.3 Electrical connection

Connect the product to a grounded outlet protected by a fuse complying with the values in the rating plate. Our company shall not be liable for any damages that will arise when the product is used without grounding in accordance with the local regulations.
- Electrical connection must comply with national regulations.
- Power cable plug must be within easy reach after installation.
- The voltage and allowed fuse or breaker protection are specified in the Rating Plate which is affixed to interior of the product. If the current value of the fuse or breaker in the house does not comply with the value in the rating plate, have a qualified electrician install a suitable fuse.
- The specified voltage must be equal to your mains voltage.
- WARNING: Do not locate extension sockets or charging transformers/power supplies or Lithium-Iron battery operated products adjacent to the compressor as they could overheat.

- Do not make connections via extension cables or multi-plugs.

	**WARNING:** Damaged power cable must be replaced by the Authorised Service Agents.
	**WARNING:** If the product has a failure, it should not be operated unless it is repaired by the Authorised Service Agent! There is the risk of electric shock!

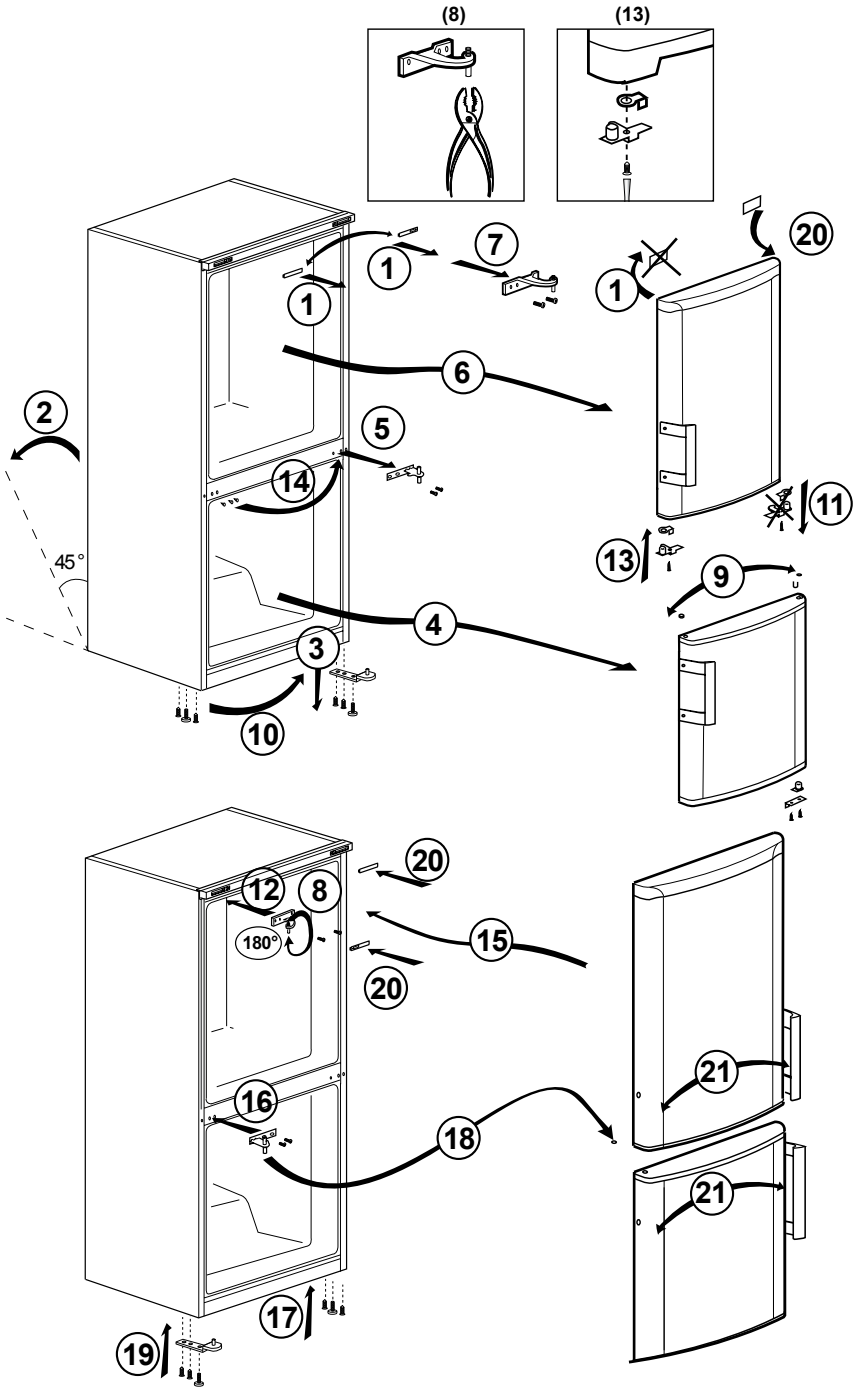
(8)
(13)
1
1
7
1
20
6
2
5
14
45°
11
13
9
4
3
10
20
12
8
180°
15
20
21
16
18
21
17
19

4. Preparation

4.1 Things to be done for energy saving

⚠	Connecting the product to electric energy saving devices is risky as it may cause damage on the product.

- For a freestanding appliance; 'this refrigerating appliance is not intended to be used as a built-in appliance.
- Do not leave the doors of your Freezer open for a long time.
- Do not put hot food or drinks in your refrigerator.
- Do not overload the Freezer. Cooling capacity will fall when the air circulation inside is hindered.
- Do not place the Freezer in places subject to direct sunlight. Install the product at least 30 cm away from heat sources such as hobs, ovens, heater cores and stoves and at least 5 cm away from electrical ovens.
- Pay attention to store your food in Freezer in closed containers.
- You can load maximum amount of food to the freezer compartment of the Freezer by removing the freezer compartment drawers. Declared energy consumption value of the refrigerator was determined with the freezer compartment drawers removed,except if available bottom drawer and with maximum amount of food loaded. There is no risk in removing a shelf or drawer to make suitable for the shapes and sizes of the foods to be frozen.
- Thawing frozen food in fridge compartment will both provide energy saving and preserve the food quality.

ⓘ	The ambient temperature of the room where you install the Freezer should at least be -15°C. Operating your Freezer under colder conditions than this is not recommended.
ⓘ	Inside of your Freezer must be cleaned thoroughly.

4.2 Initial use

Before starting to use the product, check that all preparations are made in accordance with the instructions in sections "Important instructions for safety and environment" and "Installation".

- Clean the interior of the Freezer as recommended in the “Maintenance and cleaning” section. Check that inside of it is dry before operating it.
- Plug the Freezer into the grounded wall outlet. When the door is opened the interior illumination will turn on.
- Run the Freezer without putting any food for 6 hours and do not open its door unless certainly required.

ⓘ	You will hear a noise when the compressor starts up. The liquids and gases sealed within the refrigeration system may also give rise to noise, even if the compressor is not running and this is quite normal.

ⓘ	Front edges of the Freezer may feel warm. This is normal. These areas are designed to be warm to avoid condensation.

ⓘ	For energy efficiency testing, it is recommmended to remove top shelf and load food on the shelf below.Net volume of your appliance is declared without top two flaps and the top shelf in place.Place two ice pack (if provided) directly on the top of frozen food to be stored on top shelf.

ⓘ	Since hot and humid air will not directly penetrate into your product when the doors are not opened, your product will optimize itself in conditions sufficient to protect your food. Functions and components such as compressor, fan, heater, defrost, lighting, display and so on will operate according to the needs to consume minimum energy under these circumstances.

5 . Using your refrigerator

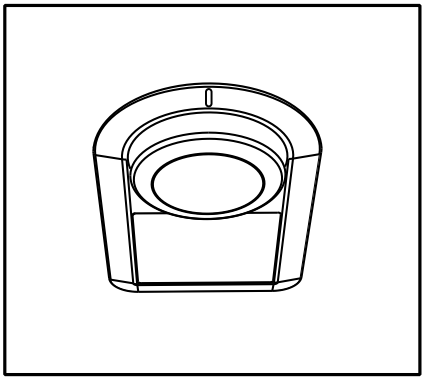

The operating temperature is regulated by the temperature control.

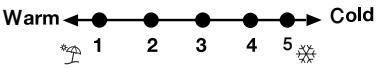

1=Lowest cooling setting (Warmest setting).

4=Highest cooling setting (Coldest setting).

5=Quick freeze

The average temperature inside the fridge should be around +5°C.

Please choose the setting according to the desired temperature.

Please note that there will be different temperatures in the cooling area.

The coldest region is immediately above the vegetable compartment.

The interior temperature also depends on ambient temperature, the frequency with which the door is opened and the amount of foods kept inside.

Frequently opening the door causes the interior temperature to rise.

For this reason, it is recommended to close the door again as soon as possible after use.

Setting 5 turns on fresh food freezing mode in the freezer. This mode automatically reverts to setting 4 after 8 hours of operation. For optimum fresh food freezing the fresh food packages should placed inside the freezer at that time.

5.1 Thermostat setting button

The interior temperature of your refrigerator changes for the following reasons;

- Seasonal temperatures,
- Frequent opening of the door and leaving the door open for long periods,

ⓘ	Figures in this user manual are schematic and may not match the product exactly. If the subject parts are not included in the product you have purchased, then those parts are valid for other models.

- Food put into the refrigerator without cooling down to the room temperature,
- The location of the refrigerator in the room (e.g. exposing to sunlight).
- You may adjust the varying interior temperature due to such reasons by using the thermostat. If the ambient temperature is higher than 32°C, turn the thermostat button to maximum position.
- If the ambient temperature is lower than 25°C, turn the thermostat button to minimum position.

5.2 Defrost

Fridge compartment

Fridge compartment performs full-automatic defrosting. Water drops and a frosting up to 7-8 mm can occur on the inner rear wall of the fridge compartment while your refrigerator cools down. Such formation is normal as a result of the cooling system. The frost formation is defrosted by performing automatic defrosting with certain intervals thanks to the automatic defrosting system of the rear wall. User is not required to scrape the frost or remove the water drops. Water resulting from the defrosting passes from the water collection groove and flows into the evaporator through the drain pipe and evaporates here by itself.

Deep freezer compartment does not perform automatic defrosting in order to prevent decaying of the frozen food. The freezer compartment defrosts automatically. Check regularly to see if the drain pipe is clogged or not and clear it with the plunger in the hole when necessary.

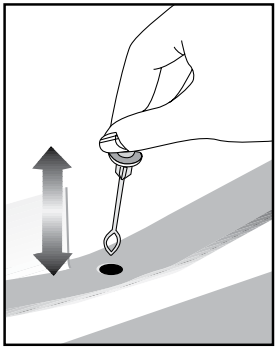

5.3 Freezing fresh food

- 8 hours before freezing the fresh food, turn the temperature controller to setting 5 (Quick Freeze).
- It must be preferred to wrap or cover the food before placing them in the refrigerator.
- Hot food must cool down to the room temperature before putting them in the refrigerator.
- The foodstuff that you want to freeze must be fresh and in good quality.
- Foodstuff must be divided into portions according to the family's daily or meal based consumption needs.
- The foodstuff must be packaged in an airtight manner to prevent them from drying even if they are going to be kept for a short time.
- The fresh food packages should be placed in a ratio of 3 to 2 in front most side of the first and second drawer from the freezer top side respectively.
- Frozen food must be used immediately after they are thawed and they should never be re-frozen.
- Please observe the following instructions to obtain the best results.
  1. Do not freeze too large quantities of food at one time. The quality of the food is best preserved when it is frozen right through to the core as quickly as possible.
  2. Placing warm food into the freezer compartment causes the cooling system to operate continuously until the food is frozen solid.
  3. Take special care not to mix already frozen food and fresh food.

5.4 Recommendations for preservation of frozen food

- Prepacked commercially frozen food should be stored in accordance with the frozen food manufacturer's instructions for a ******** (4 star) frozen food storage compartment.
- To ensure that the high quality achieved by the frozen food manufacturer and the food retailer is maintained, the following should be remembered:

1. Put packages in the freezer as quickly as possible after purchase.
2. Ensure that contents are labeled and dated.
3. Do not exceed "Use By", "Best Before" dates on the packaging.

Defrosting

The freezer compartment defrosts automatically.

Placing the food

Freezer compartment shelves	Various frozen food such as meat, fish, ice cream, vegetables and etc.
Egg tray	Egg
Fridge compartment shelves	Food in pans, covered plates and closed containers
Fridge compartment door shelves	Small and packaged food or drinks (such as milk, fruit juice and beer)
Crisper	Vegetables and fruits
Freshzone compartment	Delicatessen products (cheese, butter, salami and etc.)

Deep-freeze information

Food must be frozen as rapidly as possible when they are put in a refrigerator in order to keep them in good quality.

It is possible to keep the food for a long time only at -18°C or lower temperatures.

You can keep the freshness of food for many months (at -18°C or lower temperatures in the deep freeze).

WARNING! ⚠

- Foodstuff must be divided into portions according to the family's daily or meal based consumption needs.
- Foodstuff must be packaged in an airtight manner to prevent them from drying even if they are going to be kept for a short time.
- Materials necessary for packaging:
- Cold resistant adhesive tape
- Self adhesive label
- Rubber rings
- Pen

Materials to be used for packaging the foodstuff must be tear-proof and resistant to cold, humidity, odor, oils and acids.

Foodstuff to be frozen should not be allowed to come in

contact with the previously frozen items to prevent their partial thawing.
Frozen food must be used immediately after they are thawed and they should never be re-frozen.

5.5 Changing the door opening direction

Door opening direction of your refrigerator can be changed according to the place you are using it.

5.6 Open door warning

*** May not be available in all models**

An audio warning will be given when the fridge compartment door of your product is left open for a certain period of time. This audio warning signal will mute when any button on the indicator is pressed or when the door is closed.

5.7 Changing the illumination lamp

To change the Bulb/LED used for illumination of your refrigerator, call your AuthorisedService.
The lamp(s) used in this appliance is not suitable for household room illumination. The intended purpose of this lamp is to assist the user to place foodstuffs in the refrigerator/freezer in a safe and comfortable way.The lamps used in this appliance have to withstand extreme physical conditions such as temperatures below -20 °C. (only chest and upright freezer)

5.8 Recommendations for freshfood compartment

*** May not be available in all models**

Please do not let any foodstuff come into contact with the temperature sensor in the freshfood compartment. In order to maintain the freshfood compartment at an ideal storage temperature, the sensor must not be blocked.

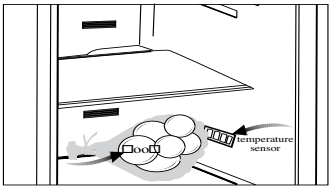

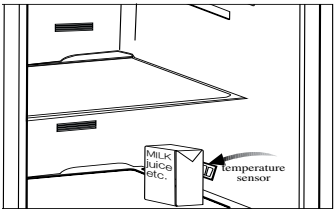

5.9 Chiller Shelf And Vegetable Compartment

The vegetable compartment provides the optimum conditions for fruit, vegetables and salad. Above this, the glass Chiller shelf is ideal for storing wrapped meat and fish.

5.10 Using the water dispenser

**** May not be available in all models**

ⓘ	It is normal for the first few glasses of water taken from the dispenser to be warm.
ⓘ	If the water dispenser is not used for a long period of time, dispose of first few glasses of water to obtain fresh water.

1. Push in the lever of the water dispenser with your glass. If you are using a soft plastic cup, pushing the lever with your hand will be easier.
2. After filling the cup up to the level you want, release the lever.

ⓘ	Please note, how much water flows from the dispenser depends on how far you depress the lever. As the level of water in your cup / glass rises, gently reduce the amount of pressure on the lever to avoid overflow. If you slightly press the arm, the water will drip; this is quite normal and not a failure.

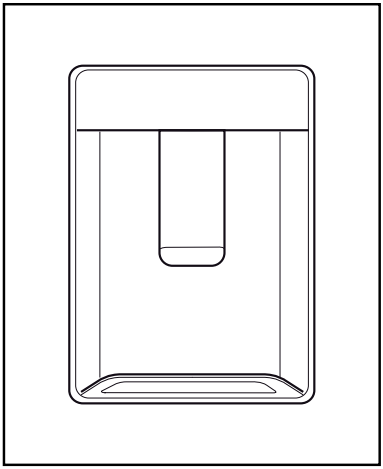

5.11 Filling the water dispenser's tank

Water tank filling reservoir is located inside the door rack.

1. Open the cover of the tank.
2. Fill the tank with fresh drinking water.
3. Close the cover.

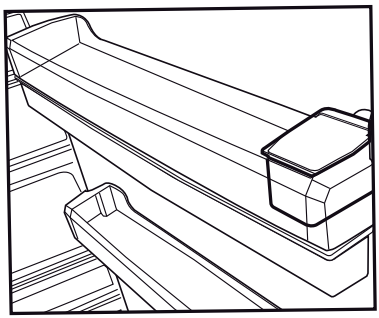

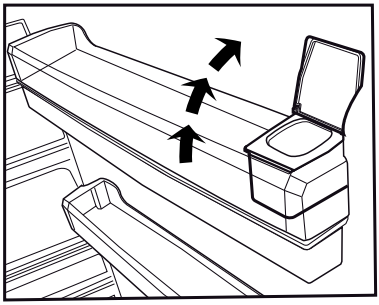

ⓘ	Do not fill the water tank with any other liquid except for water such as fruit juices, carbonated beverages or alcoholic drinks which are not suitable to use in the water dispenser. Water dispenser will be irreparably damaged if these kinds of liquids are used. Warranty does not cover such usages. Some chemical substances and additives contained in these kinds of drinks/ liquids may damage the water tank.

ⓘ	Use clean drinking water only.

ⓘ	Capacity of the water tank is 3 litres; do not overfill.

5.12 Cleaning the water tank

1. Remove the water filling reservoir inside the door rack.
2. Remove the door rack by holding from both sides.
3. Grab the water tank from both sides and remove it with an angle of 45°C.
4. Remove the cover of the water tank and clean the tank.

ⓘ	Components of the water tank and water dispenser should not be washed in dishwasher.

5.13 Drip tray

Water that dripped while using the water dispenser accumulates in the spillage tray.
Remove the plastic filter as shown in the figure.
With a clean and dry cloth, remove the water that has accumulated.

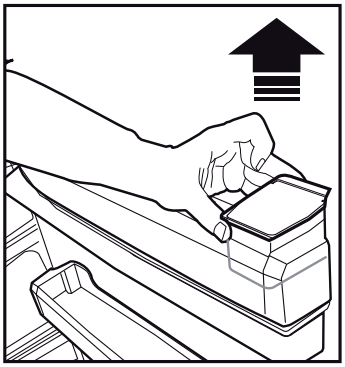

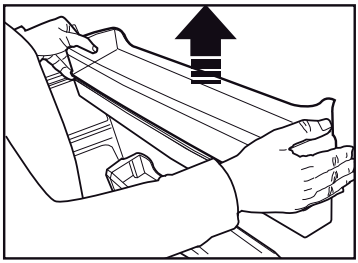

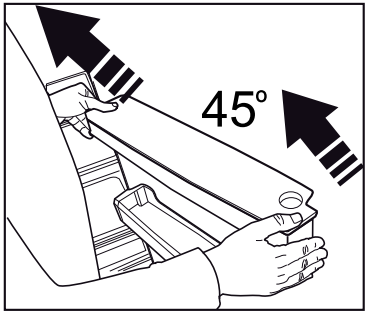

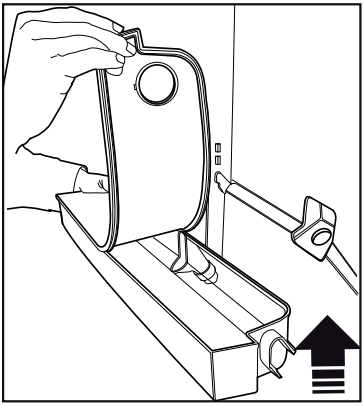

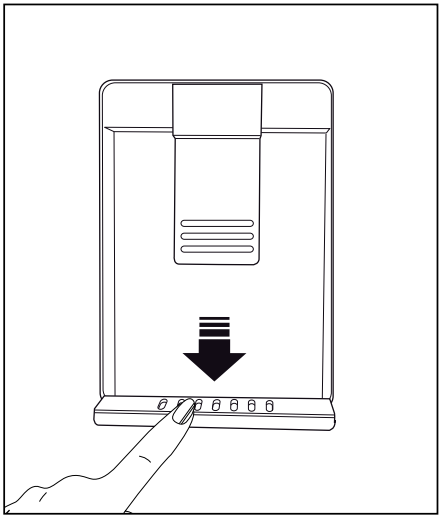

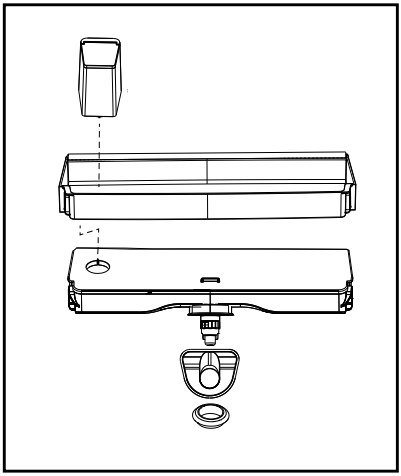

6 . Maintenance and cleaning

Service life of the product extends and frequently faced problems decrease if cleaned at regular intervals.



WARNING: Unplug the product before cleaning it.

- Never use gasoline, benzene or similar substances for cleaning purposes.
- Never use any sharp and abrasive tools, soap, household cleaners, detergent and wax polish for cleaning.
- Dissolve one teaspoon of carbonate in half litre of water. Soak a cloth with the solution and wrung it thoroughly. Wipe the interior of the Freezer with this cloth and the dry thoroughly.
- Make sure that no water enters the lamp housing and other electrical items.
- If you will not use the Freezer for a long period of time, unplug it, remove all food inside, clean it and leave the door ajar.
- Check regularly that the door gaskets are clean. If not, clean them.
- To remove door and body shelves, remove all of its contents.
- Remove the door shelves by pulling them up. After cleaning, slide them from top to bottom to install.
- Never use cleaning agents or water that contain chlorine to clean the outer surfaces and chromium coated parts of the product. Chlorine causes corrosion on such metal surfaces

6.1 Avoiding bad odours

Materials that may cause odour are not used in the production of our Freezers. However, due to inappropriate food preserving conditions and not cleaning the inner surface of the Freezers as required can bring forth the problem of odour. Pay attention to following to avoid this problem:

- Keeping the Freezers clean is important. Food residuals, stains, etc. can cause odour. Therefore, clean the Freezers with Sodium Bicarbonate dissolved in water every few months.Never use detergents or soap.

- Keep the food in closed containers. Microorganisms spreading out from uncovered containers can cause unpleasant odours.
- Never keep the food that have passed the best before dates and spoiled in the Freezer.

6.2 Protecting the plastic surfaces

Do not put liquid oils or oil-cooked meals in your Freezer in unsealed containers as they damage the plastic surfaces of the Freezer. If oil is spilled or smeared onto the plastic surfaces, clean and rinse the relevant part of the surface at once with warm water.

7. Troubleshooting

Check this list before contacting the service. Doing so will save you time and money. This list includes frequent complaints that are not related to faulty workmanship or materials. Certain features mentioned herein may not apply to your product.

The refrigerator is not working.

- The power plug is not fully settled. >>> Plug it in to settle completely into the socket.
- The fuse connected to the socket powering the product or the main fuse is blown. >>> Check the fuses.

Condensation on the side wall of the cooler compartment (MULTI ZONE, COOL, CONTROL and FLEXI ZONE).

- The door is opened too frequently >>> Take care not to open the product's door too frequently.
- The environment is too humid. >>> Do not install the product in humid environments.
- Foods containing liquids are kept in unsealed holders. >>> Keep the foods containing liquids in sealed holders.
- The product's door is left open. >>> Do not keep the product's door open for long periods.
- The thermostat is set to too low temperature. >>> Set the thermostat to appropriate temperature.

Compressor is not working.

- In case of sudden power failure or pulling the power plug off and putting back on, the gas pressure in the product's cooling system is not balanced, which triggers the compressor thermic safeguard. The product will restart after approximately 6 minutes. If the product does not restart after this period, contact the service.
- Defrosting is active. >>> This is normal for a fully-automatic defrosting product. The defrosting is carried out periodically.
- The product is not plugged in. >>> Make sure the power cord is plugged in.
- The temperature setting is incorrect. >>> Select the appropriate temperature setting.

- The power is out. >>> The product will continue to operate normally once the power is restored.

The refrigerator's operating noise is increasing while in use.

- The product's operating performance may vary depending on the ambient temperature variations. This is normal and not a malfunction.

The refrigerator runs too often or for too long.

- The new product may be larger than the previous one. Larger products will run for longer periods.
- The room temperature may be high. >>> The product will normally run for long periods in higher room temperature.
- The product may have been recently plugged in or a new food item is placed inside. >>> The product will take longer to reach the set temperature when recently plugged in or a new food item is placed inside. This is normal.
- Large quantities of hot food may have been recently placed into the product. >>> Do not place hot food into the product.
- The doors were opened frequently or kept open for long periods. >>> The warm air moving inside will cause the product to run longer. Do not open the doors too frequently.
- The freezer or cooler door may be ajar. >>> Check that the doors are fully closed.
- The product may be set to temperature too low. >>> Set the temperature to a higher degree and wait for the product to reach the adjusted temperature.
- The cooler or freezer door washer may be dirty, worn out, broken or not properly settled. >>> Clean or replace the washer. Damaged / torn door washer will cause the product to run for longer periods to preserve the current temperature.

The freezer temperature is very low, but the cooler temperature is adequate.

- The freezer compartment temperature is set to a very low degree. >>> Set the freezer compartment temperature to a higher degree and check again.

The cooler temperature is very low, but the freezer temperature is adequate.

- The cooler compartment temperature is set to a very low degree. >>> Set the freezer compartment temperature to a higher degree and check again.

The food items kept in cooler compartment drawers are frozen.

- The cooler compartment temperature is set to a very low degree. >>> Set the freezer compartment temperature to a higher degree and check again.

The temperature in the cooler or the freezer is too high.

- The cooler compartment temperature is set to a very high degree. >>> Temperature setting of the cooler compartment has an effect on the temperature in the freezer compartment. Wait until the temperature of relevant parts reach the sufficient level by changing the temperature of cooler or freezer compartments.
- The doors were opened frequently or kept open for long periods. >>> Do not open the doors too frequently.
- The door may be ajar. >>> Fully close the door.
- The product may have been recently plugged in or a new food item is placed inside. >>> This is normal. The product will take longer to reach the set temperature when recently plugged in or a new food item is placed inside.
- Large quantities of hot food may have been recently placed into the product. >>> Do not place hot food into the product.

Shaking or noise.

- The ground is not level or durable. >>> If the product is shaking when moved slowly, adjust the stands to balance the product. Also make sure the ground is sufficiently durable to bear the product.
- Any items placed on the product may cause noise. >>> Remove any items placed on the product.

The product is making noise of liquid flowing, spraying etc.

- The product's operating principles involve liquid and gas flows. >>> This is normal and not a malfunction.

There is sound of wind blowing coming from the product.

- The product uses a fan for the cooling process. This is normal and not a malfunction.

There is condensation on the product's internal walls.

- Hot or humid weather will increase icing and condensation. This is normal and not a malfunction.
- The doors were opened frequently or kept open for long periods. >>> Do not open the doors too frequently; if open, close the door.
- The door may be ajar. >>> Fully close the door.

There is condensation on the product's exterior or between the doors.

- The ambient weather may be humid, this is quite normal in humid weather. >>> The condensation will dissipate when the humidity is reduced.

The interior smells bad.

- The product is not cleaned regularly. >>> Clean the interior regularly using sponge, warm water and carbonated water.
- Certain holders and packaging materials may cause odour. >>> Use holders and packaging materials without free of odour.
- The foods were placed in unsealed holders. >>> Keep the foods in sealed holders. Micro-organisms may spread out of unsealed food items and cause malodour. Remove any expired or spoilt foods from the product.

The door is not closing.

- Food packages may be blocking the door. >>> Relocate any items blocking the doors.
- The product is not standing in full upright position on the ground. >>> Adjust the stands to balance the product.
- The ground is not level or durable. >>> Make sure the ground is level and sufficiently durable to bear the product.

The vegetable bin is jammed.

- The food items may be in contact with the upper section of the drawer. >>> Reorganize the food items in the drawer.

If The Surface Of The Product Is Hot.

- High temperatures may be observed between the two doors, on the side panels and at the rear grill while the product is operating. This is normal and does not require service maintenance!Be careful when touching these areas.

⚠ **WARNING:**

If the problem persists after following the instructions in this section, contact your vendor or an Authorised Service. Do not try to repair the product.

GRUNDIG UK AND IRELAND STANDARD MANUFACTURER GUARANTEE TERMS AND CONDITIONS

Your new Grundig product is guaranteed against faulty materials, defective components or manufacturing defects.

The standard guarantee starts from the date of original purchase of the product, and lasts for a period of thirty six (36) months unless Beko plc (the "Manufacturer") agrees to extend the guarantee for the product in writing.

If you have registered the product within 90 days of purchase by completing the online registration form, then the standard 36 month guarantee will be extended to 60 months, under the same terms and conditions as detailed below

If you have any questions about the guarantee on your product (including how long it is valid), please contact your retailer or our contact centre on **0333 207 9920** (UK and Northern Ireland) or **01 691 0203** (Republic of Ireland)

This guarantee does not in any way diminish or affect your statutory rights in connection with the product. This guarantee is in addition to your statutory rights as a consumer. If you have any questions about these rights, please contact the retailer from which you purchased the product. In certain circumstances, it is possible that your statutory rights may offer additional or higher levels of protection than those offered under the terms of this guarantee.

What is covered by this guarantee?

- Repairs to the product required as a result of faulty materials, defective components or manufacturing defects.
- Functional replacement parts to repair a product.
- The costs of a Grundig Approved Engineer to carry out the repair.

What is not covered?

- Transit and delivery damage.
- Cabinet or appearance parts, including but not limited to control knobs, flaps and handles.
- Accessories and/or consumable items including but not limited to ice trays, scrapers, cutlery baskets, filters and light bulbs.
- Repairs necessary as a direct or indirect result of:

-Accidental damage, misuse or abuse of a product.

-An attempted repair of a product by anyone other than a Grundig Approved Engineer (the "Engineer").

-Installation or use of a product where such installation or use fails to meet the requirements contained in this guarantee or the User Instructions Booklet.

- Repairs to a product operated at any time on commercial or non-residential household premises (unless we have previously agreed to the installation environment).

This guarantee is limited to the cost of repairing the product. To the extent permitted by law, the Manufacturer does not accept and will not be held liable for any financial loss incurred in connection with the failure of any product to operate in accordance with the expected standards. Such financial loss includes but is not limited to loss arising from:

- Time taken off work.
- Damaged food, clothing or other items.
- Meals taken at restaurants or from takeaways.
- General compensation for inconvenience.

Important Notes

1. Your product is designed and built for domestic household use only.
2. The guarantee will automatically be void if the product is installed or is used in commercial or non-residential domestic household premises, unless we have previously agreed to the installation environment.
3. The product must be correctly installed, located and operated in accordance with the instructions contained in the User Instructions Booklet provided with your product.

4. Professional installation by a qualified Electrical Domestic Appliance Installer is recommended for all Washing Machines, Dishwashers and Electric Cookers (as incorrect installation may result in you having to pay for the cost of repairing the product).
5. Gas Cookers must be professionally installed by a Gas Safe (or Gas Networks Ireland for Republic of Ireland) registered gas installer.
6. This guarantee is given in respect of products purchased and used within the United Kingdom and the Republic of Ireland.
7. This guarantee is effective from the initial date of purchase of a new product from an authorised retailer and will be void if the product is resold.
8. This guarantee does not apply to graded sales (where the product is purchased as a "second").
9. Possession of a copy of these terms and conditions does not necessarily mean that a product has the benefit of this guarantee. If you have any questions, please call our Call Centre on the number set out above.
10. The Manufacturer reserves the right to terminate the guarantee if its staff or representatives are subjected to physical or verbal abuse in the course of carrying out their duties.
11. Optional extras, where available (i.e. extendable feet) are supplied on a chargeable basis only.

Does Grundig offer replacements?

This is a repair-only guarantee. On occasion, the Manufacturer may at its sole discretion, replace your product with a new product instead of carrying out a repair. Where a replacement is offered, this would normally be an identical model but when this is not possible, a model of similar specification will be provided. The Manufacturer will cover the costs and arrange for the delivery of the new product and for the return of the old product. Any costs related to disconnecting the faulty product and installing the replacement product will not be borne by the Manufacturer

unless previously agreed to in writing. The original guarantee will continue to apply to the replacement product; the new product will not come with a new guarantee.

When will the repair take place?

Our Engineers work Monday to Friday 9.00am to 5.00pm. Appointments outside these hours may be possible at the sole discretion of the Manufacturer but cannot be guaranteed. Whilst our Engineers will endeavour to minimize inconvenience and to meet requests for specific timed appointments, this cannot be guaranteed. We will not be liable for delays or if it is unable to carry out a repair because a convenient appointment cannot be arranged.

Will there be any charge for the repairs?

It is your responsibility to provide evidence to the Engineer that your product is covered by this guarantee with a proof of purchase. The Manufacturer reserves the right to charge for the reasonable cost of any service call if:

- You cannot provide evidence that your product is covered by this guarantee.
- Where a service call has been made and the engineer finds that there is no fault with your product.
- That your product has not been installed or operated in accordance with the User Instructions Booklet.
- That the fault was caused by something other than faulty materials, defective components or manufacturing defects.
- For missed appointments.

Payment of these costs are due immediately upon the Engineer providing you with an invoice. The Manufacturer reserves the right to terminate the guarantee if you fail to pay the costs for the service call in a timely manner.

If you are a resident of the United Kingdom, this guarantee will be governed by English law and subject to the English Courts, save where you live in another part of the United Kingdom, in which case the law and courts of that location will apply.
If you are resident in the Republic of Ireland, this guarantee will be governed by Irish law and the Irish courts will have jurisdiction.

This guarantee is provided by Beko plc. Beko House, 1 Greenhill Crescent, Watford, Hertfordshire. WD18 8QU.

Beko plc is registered in England and Wales with company registration number 02415578.

GRUNDIG UK AND IRELAND ECO INVERTER MOTOR GUARANTEE TERMS AND CONDITIONS

This 10 year guarantee relates to Grundig products that feature the Eco Inverter Motor.

The Eco Inverter Motor guarantee terms and conditions are in addition to our Standard guarantee terms and conditions detailed in the previous section.

In order to activate the 10 year guarantee you MUST register the appliance within 90 days of the original purchase date. You can register by first visiting grundig.co.uk/register and by following the online instructions.

Grundig Free standing and Built-in appliances come with a 36 month parts and labour guarantee as standard, which can be extended to a 60 months parts and labour guarantee by registering within 90 days of the original purchase date
To make a claim against your Grundig Eco Inverter Motor Guarantee (the "Guarantee"), all customer and product details must be registered with Beko plc using the procedure outlined below.

1. This extra 7 years (or 5 years for appliances registered within 90 days of the original purchase date) Guarantee is only effective after the expiration of the standard manufacturer's guarantee.
2. It is only valid for the Eco Inverter motors of selected washing machines, washer-dryers, tumble dryers and dishwashers. It does not cover any labour charge or any other components of the product. In addition, it is only valid for one replacement of the Eco Inverter motor during the extra 7 years (or 5 years for appliances registered within 90 days of the original purchase date) guarantee period.
3. To activate your guarantee, you MUST register your appliance within 90 days of the original purchase date, by visiting Grundig.co.uk/register.
4. Customers will receive a unique reference code as proof of guarantee validation by email or post, which must be quoted at the time of a claim being made.
5. Any repair/replacement of the Eco Inverter motor must only be carried out by an authorised Grundig Service Agent (the "Service Agent").
6. Labour for the repair/replacement of the Eco Inverter motor is not included in this guarantee and is chargeable directly by the Service Agent.
7. Any additional components fitted to the product at any time will not be covered by this guarantee and will be chargeable directly by the Service Agent.
8. The guarantee is not transferable and cannot be exchanged for cash.
9. There are no alternative or additional offers to this Guarantee.
10. The guarantee is exclusive of the manufacturer's standard guarantee.
11. The Terms and Conditions shown above are in addition to the standard terms and conditions of your product guarantee. Please read and refer to such Terms and Conditions when making any claim.

12. We may use the information you provide for marketing purposes and to analyse your purchasing preferences. We may keep your information for a reasonable period for these purposes in accordance with the applicable Data Protection Laws and General Data Protection Regulations (GDPR). You can opt into this service during the registration process. Further details are available at http://www.Grundig.co.uk/cookie-and-privacy.

13. These Terms and Conditions are governed by the laws of England and Wales; manufacturer: Beko plc, Beko House, 1 Greenhill Crescent, Watford WD18 8QU. Company Registration Number: 02415578.

HOW TO OBTAIN SERVICE FOR YOUR APPLIANCE

Please keep your purchase receipt or other proof of purchase details in a safe place; you will need to have this documentation available should the product require attention under guarantee.

Please take a few moments to complete the details below, as you will need this information when you call us, or to use our online services. When you call us you may be required to input your serial number into your telephone keypad. For help please visit grundig.co.uk/support/model-finder

- The product model number is printed on the Operating Instruction Booklet / User guide
- The product model and serial number is printed on the Rating Label affixed to the appliance.
- The Retailer (Purchased from) and Date of purchase will be printed on your purchase receipt or other proof of purchase paperwork

Recording of these details alone will not count as proof of purchase. A valid proof of purchase is required for requesting service under guarantee.

Model number	Serial number	Purchased from	Date of purchase

For service under guarantee or for product advice please call our Contact centre

Before requesting service please check the troubleshooting guide in the Operating Instructions booklet, as a charge may be levied where no fault is found, and even though your product may still be under guarantee.

After arranging service the area around the product must be easily accessible to the Engineer, without the need for cabinets or furniture to be removed or moved.

It is your responsibility to ensure our Engineers have a clean and safe environment to carry out any repairs.

Please have your Model number and Serial number available when you call us, as you may be required to input your serial number into your telephone keypad during your call.

UK Mainland & Northern Ireland:

0333 207 9920

Landline or mobile calls to 0333 numbers cost no more than calls to geographic numbers 01 or 02, and are charged at the basic rate. Calls from landlines and mobiles are included in free call packages but please check with your telephone service provider for exact call charges.

Republic of Ireland:

01 691 0203

Service once the manufacturers guarantee has expired

If you have purchased an extended guarantee please refer to the instructions contained within the extended guarantee agreement document, otherwise please call us using the appropriate number above, where service can be obtained at a charge.

Should you experience any difficulty in obtaining service please call us on

0333 207 9920 or **01 691 0203**

Contact us though our website

Send us a secure message through our online contact us form. Please visit our website, click Contact Us and choose a product support topic from the list of options. Complete the required details and click send message.

Product registrations

For UK and Republic of Ireland product registrations please visit grundig.co.uk/register.

Notes

Notes