FRIGIDAIRE

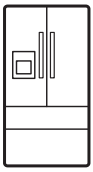

REFRIGERATOR

use & care

Introduction....2
Important Safety Information....3
Features....7
Installation....8
Door Removal....10
Door Handle Installation....14
Water Supply Connection....15
Controls and Settings....17
Automatic Ice and Water Dispenser....22
Storage Features....25
Storing Food and Saving Energy....29
Normal Operating Sounds....30
Filter Replacement....31
Care and Cleaning....34
Troubleshooting....36
Limited Warranty....41

A21060101 (September 2021)

Welcome to our *family*

Thank you for bringing Frigidaire into your home! We see your purchase as the beginning of a long relationship together.

This manual is your resource for the use and care of your product. Please read it before using your appliance. Keep it handy for quick reference. If something doesn't seem right, the troubleshooting section will help you with common issues.

FAQs, helpful tips and videos, cleaning products, and kitchen and home accessories are available at Frigidaire.com.

We are here for you! Visit our website, chat with an agent, or call us if you need help. We may be able to help you avoid a service visit. If you do need service, we can get that started for you.

Let's make it official! Be sure to register your product.

Keep your product info here so it's easy to find.

Model Number _____

Serial Number _____

Purchase Date _____

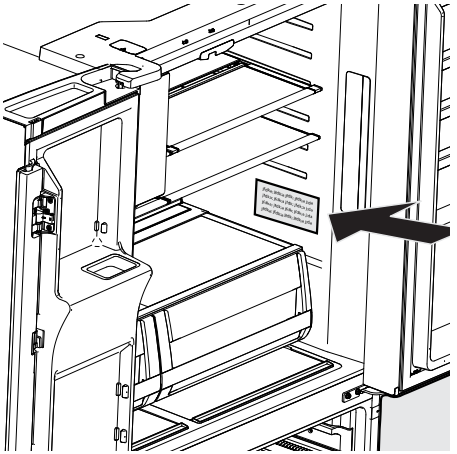

Serial Number Location

Installation Checklist

Doors

- ❒ Handles are secure and tight
- ❒ Door seals completely to cabinet on all sides

Leveling

- ❒ Refrigerator is level side-to-side and slightly elevated in front to assist with door and drawer closing (front should be higher than back)
- ❒ Cabinet is setting solid on all corners

Electrical Power

- ❒ House power turned on
- ❒ Refrigerator plugged in

Ice Maker

- ❒ House water supply connected to refrigerator (Warning: Potable water supply only.)
- ❒ No water leaks present at all connections - recheck in 24 hours
- ❒ Ice maker is turned ON
- ❒ Ice & water dispenser operates correctly

Final Checks

- ❒ Shipping material removed
- ❒ Fresh food and freezer temperatures set
- ❒ Registration submitted

WARNING

Please read all instructions before using this refrigerator.

Safety Definitions

This is the safety alert symbol. It is used to alert of potential personal injury hazards. Obey all safety messages that follow this symbol to avoid possible injury or death.

DANGER

DANGER indicates an imminently hazardous situation which, if not avoided, will result in death or serious injury.

WARNING

WARNING indicates a potentially hazardous situation which, if not avoided, could result in death or serious injury.

CAUTION

CAUTION indicates a potentially hazardous situation which, if not avoided, may result in minor or moderate injury.

IMPORTANT

IMPORTANT indicates installation, operation or maintenance information which is important but not hazard-related.

DANGER



DANGER Risk of fire or explosion. Flammable refrigerant used. Do not use mechanical devices to defrost refrigerator. Do not puncture refrigerant tubing.

DANGER Risk of fire or explosion. Flammable refrigerant used. To be repaired only by trained service personnel. Use only manufacturer-authorized service parts. Any repair equipment used must be designed for flammable refrigerants. Follow all manufacturer repair instructions. Do not puncture refrigerant tubing.

CAUTION



CAUTION Risk of fire or explosion. Dispose of refrigerator properly in accordance with the applicable federal or local regulations. Flammable refrigerant used.

CAUTION Risk of fire or explosion due to puncture of refrigerant tubing. Follow handling instructions carefully. Flammable refrigerant used.

WARNING

CALIFORNIA RESIDENTS ONLY
Cancer and Reproductive Harm
www.P65Warnings.ca.gov

Safety Instructions

- DO NOT store or use gasoline, or other flammable liquids in the vicinity of this or any other appliance. Read product labels for warnings regarding flammability and other hazards.
- DO NOT operate the refrigerator in the presence of explosive fumes.
- Avoid contact with any moving parts of automatic ice maker.
- Remove all staples from the carton. Staples can cause severe cuts, and also destroy finishes if they come in contact with other appliances or furniture.

WARNING

Do not use electrical appliances inside the food storage compartments of the appliance unless they are of the type recommended by the manufacturer.

Child Safety

Destroy or recycle the carton, plastic bags, and any exterior wrapping material immediately after the refrigerator is unpacked. Children should **NEVER** use these items to play. Cartons covered with rugs, bedspreads, plastic sheets or stretch wrap may become airtight chambers, and can quickly cause suffocation.

Proper Disposal of Refrigerator or Freezer

Risk of child entrapment

Child entrapment and suffocation are not problems of the past. Junked or abandoned refrigerators or freezers are still dangerous – even if they will sit for "just a few days". When disposing of an old refrigerator or freezer, please follow the instructions below to help prevent accidents.

Proper Disposal of Refrigerators/Freezers

We strongly encourage responsible appliance recycling/disposal methods. Check with the utility company or visit energystar.gov/recycle for more information on recycling an old refrigerator.

Before disposing of an old refrigerator/ freezer:

- Remove doors.
- Leave shelves in place so children may not easily climb inside.
- Have refrigerant removed by a qualified service technician.

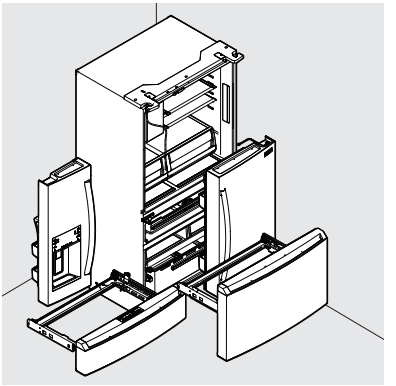

IMPORTANT

CFC/HCFC Disposal

Some old refrigerators may have a cooling system that used CFCs or HCFCs (chlorofluorocarbons or hydrochlorofluorocarbons). CFCs and HCFCs are believed to harm stratospheric ozone if released to the atmosphere. Other refrigerants may also cause harm to the environment if released to the atmosphere.

If disposing of an old refrigerator, make sure the refrigerant is removed for proper disposal by a qualified technician. Intentionally released refrigerant may subject one to fines and imprisonment under provisions of environmental legislation.

Electrical information

- The refrigerator must be plugged into its own dedicated 115 Volt, 60 Hz., 15 Amp, AC only electrical outlet. The power cord of the appliance is equipped with a three-prong grounding plug for protection against electrical shock hazards. It must be plugged directly into a properly grounded three prong receptacle. The receptacle must be installed in accordance with local codes and ordinances. Consult a qualified electrician. Avoid connecting refrigerator to a Ground Fault Interrupter (GFI) circuit. Do not use an extension cord or adapter plug.
- If the power cord is damaged, it should be replaced by an authorized service technician to prevent any risk.
- Never unplug the refrigerator by pulling on the power cord. Always grip the plug firmly, and pull straight out from the receptacle to prevent damaging the power cord.
- Unplug the refrigerator before cleaning and before replacing a light bulb to avoid electrical shock.
- Performance may be affected if the voltage varies by 10% or more. Operating the refrigerator with insufficient power can damage the compressor. Such damage is not covered under the warranty.
- Do not plug the unit into an electrical outlet controlled by a wall switch or pull cord to prevent the refrigerator from being turned off accidentally.

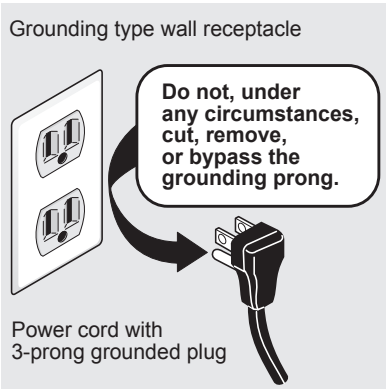

FCC Interference Statement

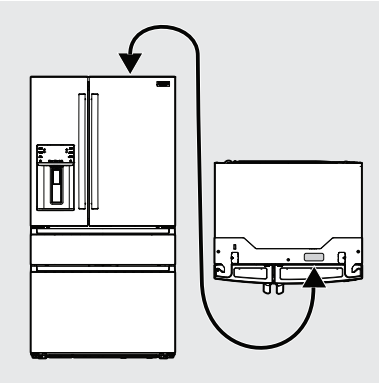

This equipment has been tested and found to comply with the limits for a Class B digital device, pursuant to part 15 of the FCC Rules. These limits are designed to provide reasonable protection against harmful interference in a residential environment. This equipment generates, uses, and can radiate radio frequency energy and, if not installed and used in accordance with the instructions, may cause harmful interference to radio communications. However, there is no guarantee that interference will not occur in a particular installation. If this equipment does cause harmful interference to radio or television reception, which can be determined by turning the device off and on, the user is encouraged to try to correct the interference by one or more of the following measures:

- Reorient or relocate the receiving antenna.
- Increase the separation between the device and receiver.
- Connect the equipment into an outlet other than the one used for the receiver.
- Consult the dealer or an experienced radio/TV technician for assistance.

This device complies with Part 15 of the FCC Rules. Operation is subject to the following two conditions: (1) This device may not cause harmful interference, and (2) This device must accept any interference received, including interference that may cause undesired operation.

FCC CAUTION: Any changes or modifications not expressly approved by the party responsible for compliance could void the user's authority to operate the equipment.

Host Device Labeling

This device includes the following module. Contains FCC ID: 2AIBX-NIU5L

RF Exposure Statement

This equipment complies with FCC radiation exposure limits set forth for an uncontrolled environment. This equipment should be installed and operated with minimum 20 cm between the radiator and your body. This transmitter must not be collocated or operating in conjunction with any other antenna or transmitter unless authorized to do so by the FCC.

Industry Canada (IC) Statement

This Class B digital apparatus complies with Canadian ICES-003.

This device complies with Industry Canada license-exempt RSS standard(s). Operation is subject to the following two conditions: (1) this device may not cause interference, and (2) this device must accept any interference, including interference that may cause undesired operation of the device.

RF Exposure

The antenna (or antennas) must be installed so as to maintain at all times a distance minimum of at least 20 cm between the radiation source (antenna) and any individual. This device may not be installed or used in conjunction with any other antenna or transmitter.

Host device Labeling

This device includes the following module. Contains IC: 21700-NIU5L

Host dispositif d'étiquetage

Ce dispositif inclut le module suivant. Contient module émetteur IC: 21700-NIU5L

Disclaimer: "The software in this product contains components that are based on free and open source software. Electrolux gratefully acknowledges the contributions of the open software and robotics communities to the development project.

To access the source code of these free and open source software components whose license conditions require publishing, and to see their full copyright information and applicable license terms, please visit: http://electrolux.opensoftwarerepository.com (folder NIU5)"

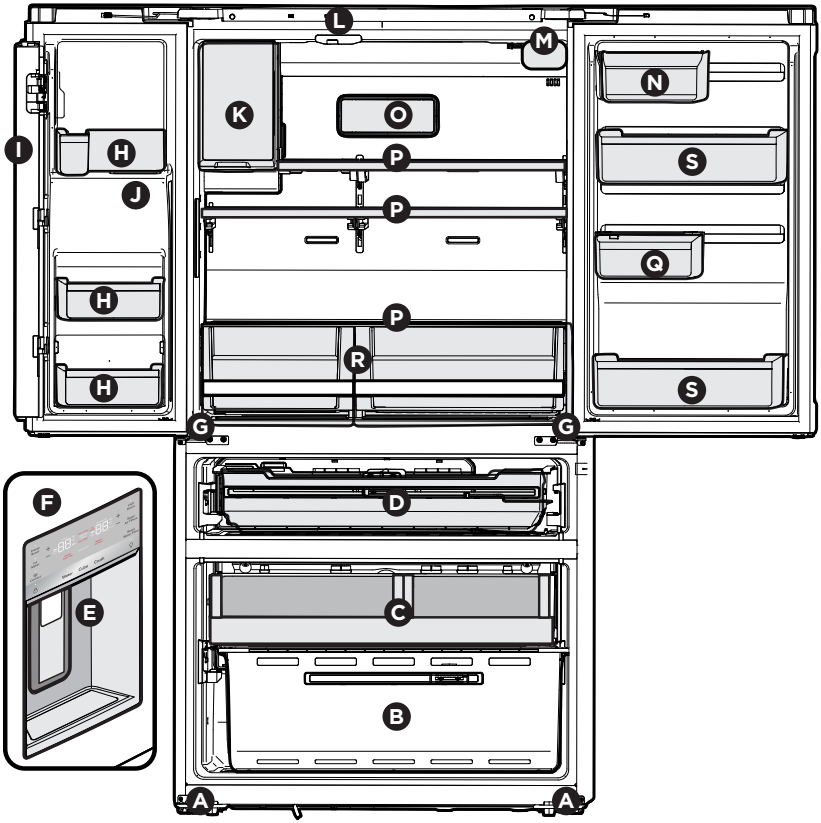

A	Anti-tip Leg
B	Lower Freezer Basket
C	Upper Freezer Basket
D	Custom-Flex™ Temp Drawer
E	Ice/Water Dispenser
F	External Appliance Control Display
G	Adjustable Hinges
H	Door Bin
I	Flipper Mullion

J	Ice Chute
K	Ice Maker
L	Flipper Guide
M	Water Filter
N	Dairy Compartment
O	Air Filter
P	Shelves
Q	Adjustable Door Bin
R	CrispSeal® Fresh Crispers
S	Gallon Door Bins

IMPORTANT

Accessories are available for refrigerator and can be purchased at Frigidaire.com or by calling 1-800-374-4432.

INSTALLATION

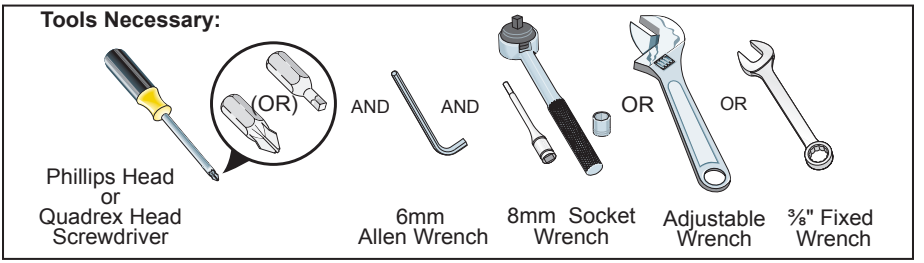

This Use & Care Manual provides general installation and operating instructions for this model. We recommend using a service or kitchen contracting professional to install the refrigerator. Use the refrigerator only as instructed in this Use & Care Manual. **Before starting the refrigerator, follow these important first steps.**

Location

- Choose a place that is near a grounded, non-GFCI, electrical outlet. **Do Not** use an extension cord or an adapter plug.
- If possible, place the refrigerator out of direct sunlight and away from the range, dishwasher, or other heat sources.
- The refrigerator must be installed on a floor that is level and strong enough to support a fully loaded refrigerator.
- Consider water supply availability for models equipped with an automatic ice maker.

WARNING

This appliance is intended to be used in household and similar applications such as:

- staff kitchen areas in shops, offices and other working environments;
- farm houses and by clients in hotels, motels and other residential type environments;
- bed and breakfast type environments;
- catering and similar non-retail applications.

CAUTION

Do Not install the refrigerator where the temperature will drop below 55°F (13°C) or rise above 110°F (43°C). The compressor will not be able to maintain proper temperatures inside the refrigerator.

WARNING

Installation

Allow the following clearances for ease of installation, proper air circulation, and plumbing and electrical connections:

Sides & Top	⅜ inch (9.5 mm)
Back	1 inch (25.4 mm)

NOTE

If the refrigerator is placed with the door hinge side against a wall, allow additional space so the door can be opened wider.

Door opening

The refrigerator should be positioned to allow easy access to a counter when removing food. For best use of refrigerator drawers and freezer baskets, the refrigerator should be in a position where both can be fully opened.

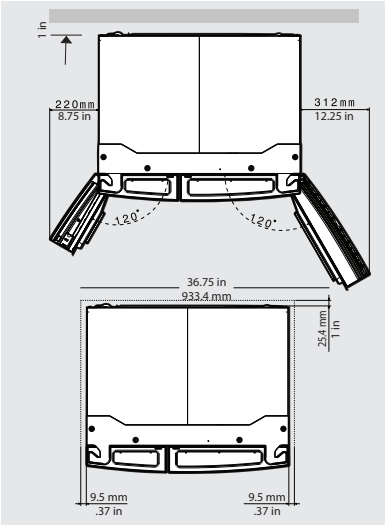

Cabinet Leveling & Refrigerator Door Alignment (if necessary)

Guidelines for final positioning of refrigerator:

- All four corners of the cabinet must rest firmly on the floor.
- The front should be slightly elevated to ensure that doors close and seal properly.
- Doors should align with each other and be level.

Most of these conditions can be met by raising or lowering the adjustable anti-tip legs.

To level the cabinet using the anti-tip legs:

1. Slightly open freezer drawer.
2. Lower anti-tip legs until they are both touching the floor. Use a pair of pliers to adjust.

   To raise unit: turn leg clockwise (as shown).

   To lower unit: turn leg counterclockwise.



3. Ensure both doors are bind-free with their seals touching the cabinet on all 4 sides and that cabinet is stable.

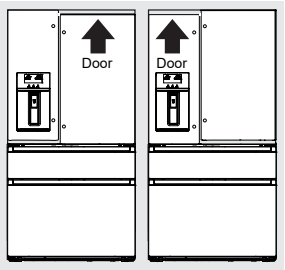

To make final door height adjustments:

1. Open Custom-Flex™ Temp drawer to make the lower hinge visible.
2. Insert 6 mm Allen™ wrench into the shaft of the lower hinge.

   To lower door: turn the adjustment screw clockwise.

   To raise door: turn the adjustment screw counterclockwise (as shown below).

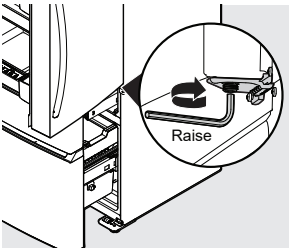

Flipper Mullion

Adjust the flipper mullion for proper connection with the mullion guide by ensuring the flipper mullion is folded and perpendicular to the fresh food door. If the mullion guide is not in the correct position, it could prevent the door from closing completely.

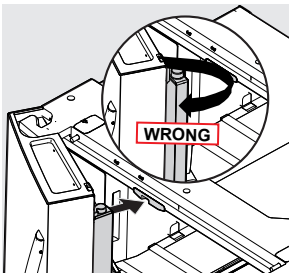

10 DOOR REMOVAL

Getting through narrow spaces

If refrigerator will not fit through an entrance area, doors can be removed. Check first by measuring the entrance.

To prepare for removing the doors:

1. Make sure the electrical power cord is unplugged from the wall outlet.
2. Remove any food from the door shelves and close the doors.

To remove the refrigerator doors:

1. Open doors to 90°.
2. Remove all 5 Phillips™ screws from top hinge cover and lift up. You can easily access 3 Phillips™ screws. You can access the other 2 screws by removing the 2 panels from the top hinge cover as shown.

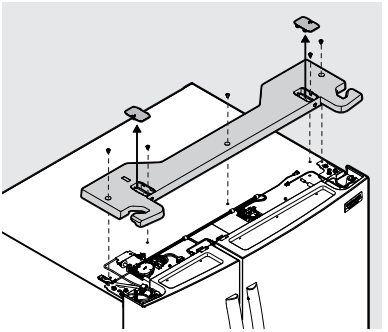

3. Trace lightly around the door's top hinges with a pencil. This makes reinstallation easier.
4. Disconnect any electrical harnesses running from the doors to the hinge cover.

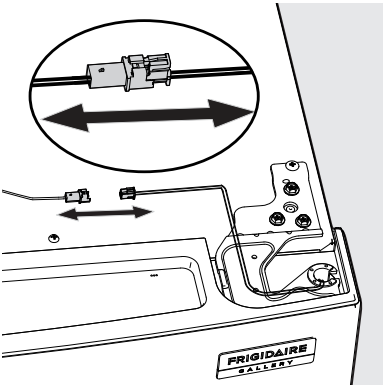

5. Pull up on water line gently to remove from door.

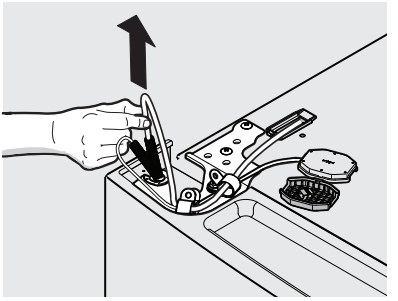

NOTE

Use care while pulling the water tube from the door to be sure that tube does not kink.

NOTE

You will pull approximately 4 ft of water tube from the refrigerator door.

CAUTION

Be sure doors are set aside in a secure position where they cannot fall and cause personal injury, or damage to the doors or handles.

6. Remove three 8 mm bolts from both top hinges. Lift doors up off lower hinges and carefully set aside.

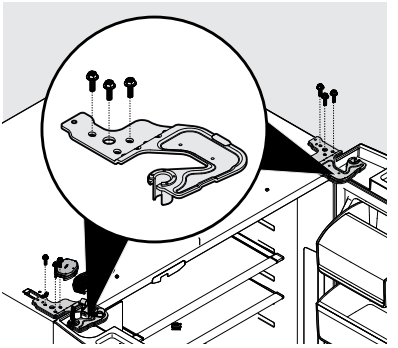

7. In certain circumstances, you may need to remove the lower hinges for clearance purposes. To gain access to the lower hinges, first extend the Custom-Flex Temp Drawer. Unscrew the 3 lower hinge screws and slide the hinge inward.

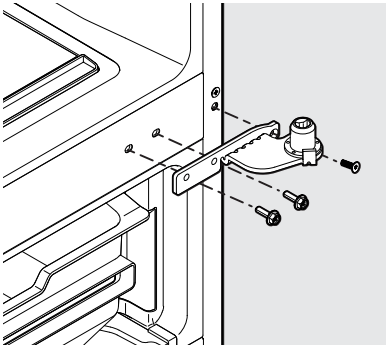

Lower Hinge Removal

8. To reinstall the doors, reverse the procedure.

IMPORTANT

Make sure the water line tubing goes through the hole at the top of the dispenser pocket. There is also a metal wrap on the tubing to prevent damage from the hinge rubbing against it. This needs to be fixed back around the tube in the proper location upon reinstallation (just as long as the tube is protected from the hinge).

NOTE

When reinserting the water tube and replacing the top hinge cover, carefully ensure the tube does not kink.

Once both doors are in place, ensure they are aligned with each other and level (Reference **INSTALLATION** for more details), and replace the top hinge cover.

To remove the Custom-Flex Temp Drawer

1. Fully open the drawer.
2. Remove the basket from the drawer.

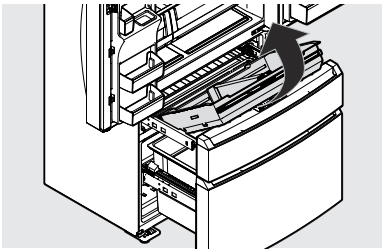

3. Unsnap the 4 cable ties by pressing clip sides together and pushing them through the opening.

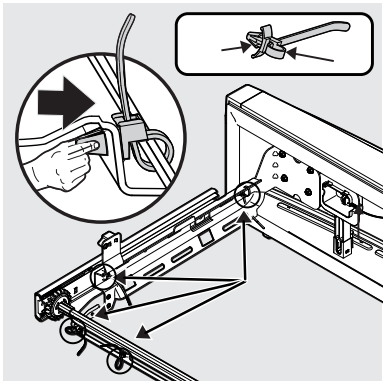

4. Remove the screw and the retaining clip and disconnect the harness

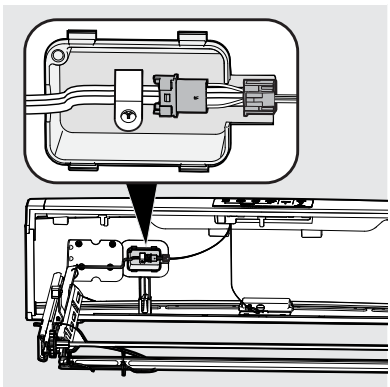

5. Remove the drawer by pressing on the liner clips and slide the rail past the clips on both sides to fully remove drawer from cabinet.

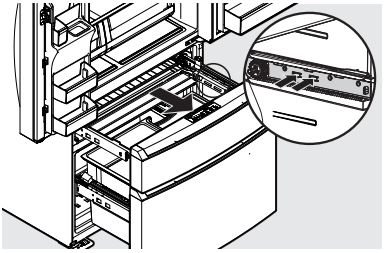

Reinstalling the Custom-Flex™ Temp Drawer

1. Place the drawer with the brackets and sliders inside the compartment and click the sliders into place on each side.

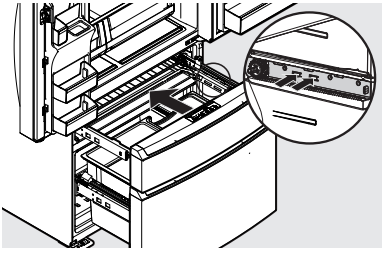

2. Reconnect the cabinet harness.
3. Replace the retaining clip and secure it with the screw.

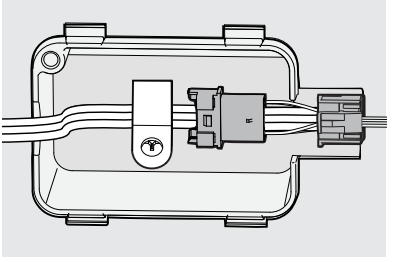

4. Reattach the electrical harness by positioning the cable clips over the black markings on the harness and push the 4 cable clips through the openings in the rail to secure the harness in place.

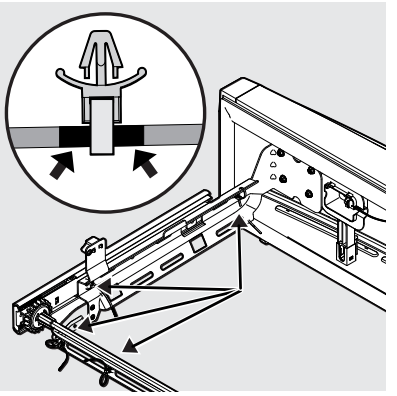

5. Slide the basket into place.
6. Close the drawer.

CAUTION

Drawer is heavy. Use caution when lifting.

Removing Freezer Drawer

1. Open the drawer and fully extend it.
2. Remove the upper freezer drawer.
3. Remove the lower freezer basket.
4. Inside the cabinet, press the 2 tabs on both sides to release the sliders.
5. Remove the drawer with brackets and sliders.

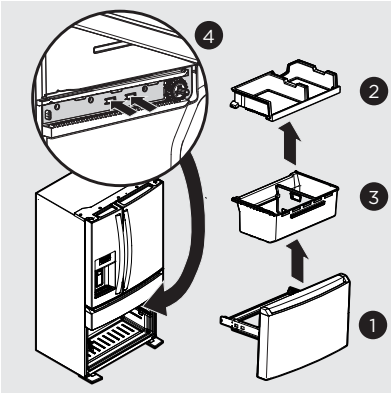

Reinstalling Freezer Drawer

1. Place the drawer with brackets and sliders inside the cabinet and click into place.
2. Replace the lower freezer basket first, and then the upper freezer basket. Ensure the upper freezer basket rollers are seated correctly into the tracks before closing the freezer drawer.

NOTE

For additional instructions, see **STORAGE FEATURES**.

14 DOOR HANDLE INSTALLATION

CAUTION

Wear gloves and safety goggles. Use extreme CAUTION when installing these handles.

Door Handle Mounting Instructions

1. Remove handles from carton and any other protective packaging.
2. Position fresh food handle end caps over upper and lower pre-installed shoulder bolts (A) that are fastened into door, ensuring the holes for the set screws are facing towards the opposite door.
3. While holding handle firmly against door, fasten upper and lower Allen set screws (B) with supplied Allen wrench.
4. Repeat steps 2 and 3 to install opposite handle. Ensure the holes for the set screws are facing towards the first door.

Mounting Refrigerator Handles

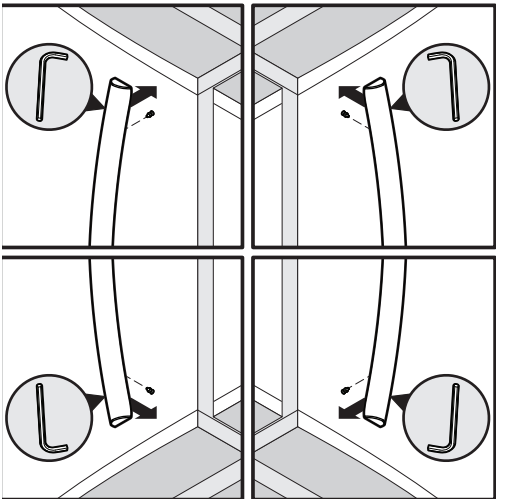

NOTE

When tightening the Allen set screws, you must apply force to the longer arm of the Allen wrench supplied in the handle packaging.

NOTE

Tighten all set screws so the screw is below the surface of the handle. Draw the handles tight to the doors/drawer with no gaps. Open the opposite door while tightening the Allen screw to make installation easier.

The door handle may loosen over time if it was installed improperly. If this happens, tighten the set screws on the handles.

WARNING

To avoid electric shock, which can cause death or severe personal injury, disconnect the refrigerator from electrical power before connecting a water supply line to the refrigerator.

CAUTION

To Avoid Property Damage:

- Copper or Stainless Steel braided tubing is recommended for the water supply line. Water supply tubing made of ¼ inch plastic is not recommended to be used. Plastic tubing greatly increases the potential for water leaks, and the manufacturer will not be responsible for any damage if plastic tubing is used for the supply line.
- DO NOT install water supply tubing in areas where temperatures fall below freezing.
- Chemicals from a malfunctioning water softener can damage the ice maker. If a water softening system is present, ensure the softener is maintained and working properly.

IMPORTANT

Ensure that the water supply line connections comply with all local plumbing codes.

To install the water supply line, the following are needed:

- Basic Tools: adjustable wrench, flat-blade screwdriver, and Phillips™ screwdriver
- Access to a household cold water line with water pressure between 30 and 100 psi.
- A water supply line made of ¼ inch (6.4 mm) OD, copper or braided stainless steel tubing. To determine the length of tubing needed, measure the distance from the main water inlet valve at the back of the refrigerator to the cold water pipe. Then add approximately 6 ft. (1.8 m), so the refrigerator can be moved out for cleaning.
- A shutoff valve to connect the water supply line to the household water system. DO NOT use a self-piercing type shutoff valve.
- Do not reuse compression fitting or use thread seal tape.
- A compression nut and ferrule (sleeve) for connecting a copper water supply line to the main water inlet valve.

NOTE

Check with local building authority for recommendations on water lines and associated materials prior to installing refrigerator. Depending on local/state building codes, Frigidaire recommends for homes with existing valves its **Smart Choice**® water line kit 5304437642 with a 6 ft. (1.8 meters) braided Stainless Steel Water Line. Please refer to Frigidaire.com for more information.

NOTE

Expect the first ice harvest within first 24 hours of unit operation. To prevent any issues concerning ice production, please ensure that all water lines are primed. See "**Priming the water supply system**" in the **AUTOMATIC ICE AND WATER DISPENSER** section.

IMPORTANT

The refrigerator's water supply system includes several tubing lines, a water filter, and a water valve. To ensure that the water dispenser works properly, this system must be completely filled with water when the refrigerator is first connected to the household water supply line.

WATER SUPPLY CONNECTION

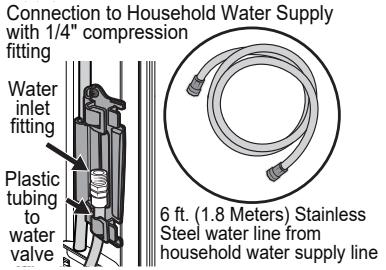

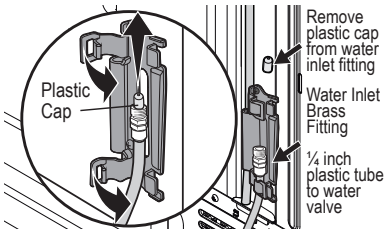

To Connect Water Tube to Household Water Supply

1. Disconnect refrigerator from electrical power source.
2. Place end of water supply line into sink or bucket. Turn ON water supply and flush supply line until water is clear. Turn OFF water supply at shutoff valve.

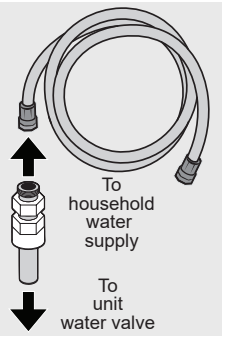

3. Open the locking clips and grab water line coming from the refrigerator. Remove plastic cap from water inlet fitting and discard cap.

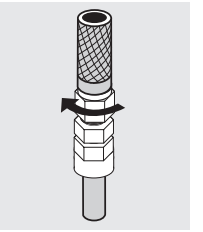

4. If using (recommended) stainless steel braided tubing - the nut and ferrule are already assembled on the tubing. Slide compression nut onto water inlet fitting and finger tighten.
5. Using 1/2” and 7/16” wrenches (one to hold the household water line nut and the other to hold the water inlet fitting nut), tighten a half turn with wrench. DO NOT over tighten.

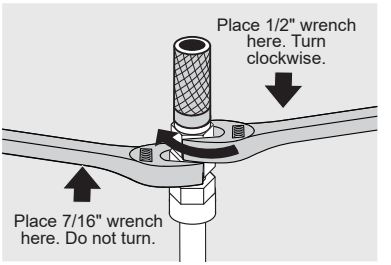

6. Replace the connected tubes into the clips and lock clips back in place to keep the tubing in the right position.
7. Turn ON water supply at shutoff valve and tighten any connections that leak.
8. Reconnect refrigerator to electrical power source.
9. Ensure ice maker is turned ON.
10. Purge air from Ice and Water Dispenser System by operating the water dispenser for 3-4 minutes. This will require dispensing several glasses of water.

External Dispenser Display

Sleep Mode Display

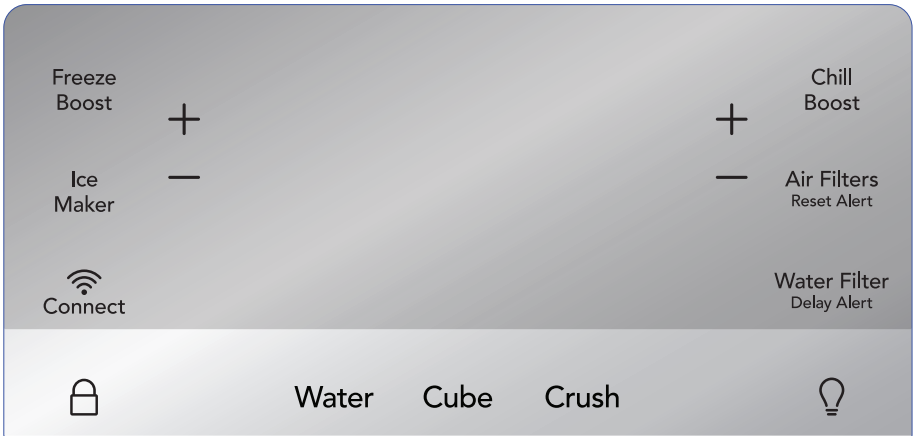

Sleep Mode

As a default, the display will go to sleep after a short time. If any icon is pressed, the display will be awakened. After a short time, it will go back to sleep. When in sleep mode, wake up the display to confirm ice maker is On/Off. Sleep mode can be turned off to have the display on full time (awake mode). When sleep mode is Off, the display will always be illuminated. To turn sleep mode On/Off, simultaneously press and hold **Crush** and for 5 seconds. Tone will confirm.

Awake Mode Display

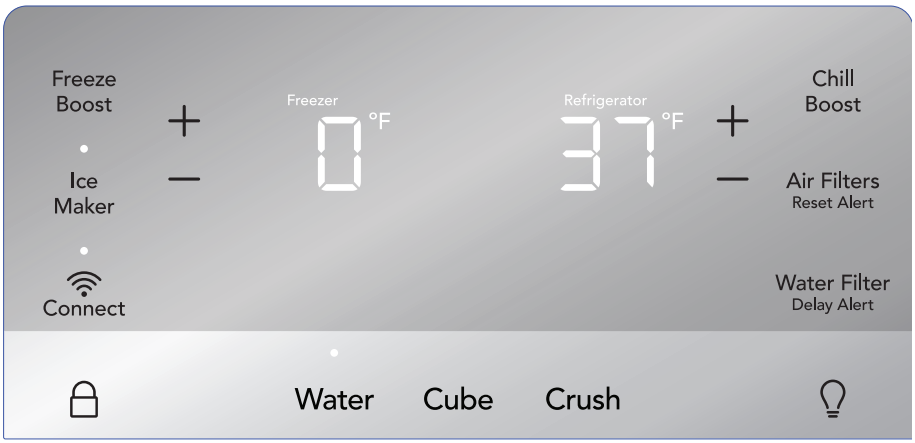

Awake Mode

To change from sleep mode (on) to awake mode (off), simultaneously press and hold **Crush** and for 5 seconds. Display will show the current temperature/ice maker status. Tone will confirm.

CONTROLS AND SETTINGS

External Dispenser Display

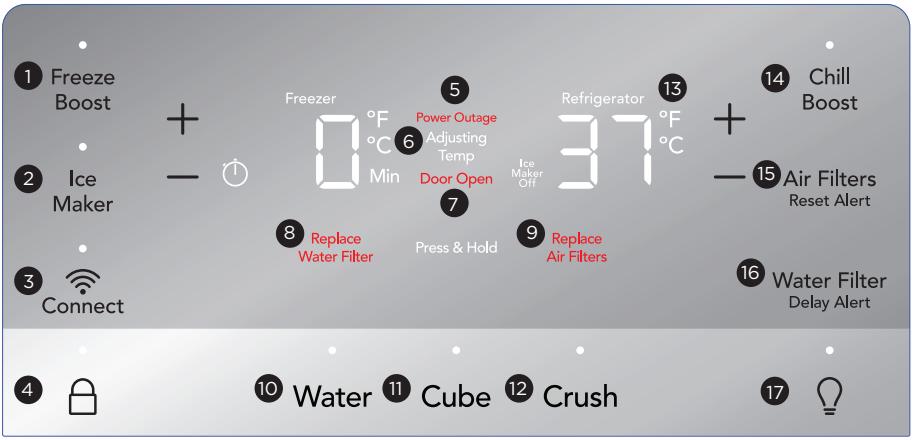

1 **Freeze Boost (on/off)**
Prior to grocery shopping, activate Freeze Boost so newly purchased food designated for the freezer will be preserved as quickly as possible. It automatically deactivates after 12 hours.

2 **Ice Maker**
Press and hold for 3 seconds to turn the ice maker on/off. When the indicator is lit, the ice maker is on. When the ice maker is OFF, the **Ice Maker Off** indicator is lit. When the ice maker is OFF, it will stop making ice. When the sleep mode is enabled, wake the display to confirm the ice maker is on/off (see **Sleep Mode** section). While off, ice dispensing can continue as long as there is ice in the bucket. When the ice maker is off and ice is dispensing, the indicator above **Ice Maker** and **Ice Maker Off** will both blink.

3 **Connect**
The Connect button connects the refrigerator to your Wi-Fi enabled mobile device. (See **To connect the refrigerator to your home internet** in **CONTROLS AND SETTINGS** for more information".)

4 The lock button can be used to lock the display preventing it from being used in certain situations. Press and hold for 3 seconds to enable/disable. While locked, no changes can be made to settings on the display. Dispensing ice and water will be disabled. The indicator will flash and an audible warning will sound.

5 **Power Outage**
In the event of a power failure, **Power Outage** will illuminate once power has been restored and a tone will sound. The alert will only illuminate if the refrigerator or freezer reached unsafe temperatures during the outage. Press any button to silence the tone.

External Dispenser Features (Continued)

6. **Adjusting Temp**
Illuminates when temperatures are changed on the display and will remain illuminated until the desired temperatures are reached inside the refrigerator and freezer. Press either the **+** or **—** to adjust to desired temperature setting.
Freezer temp
Control temperatures range from -6°F / -21°C to +6°F / -15°C.
Refrigerator temp
Control temperatures range from +34°F / +1°C to +44°F / +7°C. This unit is designed to operate at 37°F Refrigerator/0°F Freezer. The unit should stabilize temperatures within 24 hours of installation.

7. **Door Open**
Illuminates whenever the doors are open. If a door is left open for 5 minutes or more, an alarm will sound and the display will illuminate until the doors are shut. Pressing any button will mute the alarm temporarily. Check to make sure no food is blocking the doorway.

8. **Replace Water Filter**
Display illuminates every 6 months or when filter needs replacing. Replace the filter and then press and hold **Reset Water Filter** for 3 seconds to deactivate the warning on display. See **FILTER REPLACEMENT** for more information.

9. **Replace Air Filters**
Display illuminates every 6 months or when filter needs replacing. Replace the filter and then press and hold **Reset Air Filter** for 3 seconds to deactivate warning on display. See **FILTER REPLACEMENT** for more information.

10. **Water**
Press **Water** to dispense water. An indicator light will illuminate above the active feature.

11. **Cube**
Press **Cube** to dispense cubed ice. An indicator light will illuminate above the active feature.

12. **Crush**
Press **Crush** to dispense crushed ice. An indicator light will be illuminated above the active feature.

13. **°F/°C**
To toggle between Fahrenheit (°F) and Celsius (°C), simultaneously press and hold **+** and **—** for 5 seconds on the refrigerator side of display.

14. **Chill Boost**
Chill Boost is a faster rate for chilling food in the refrigerator compartment. Use this feature when loading several items into the refrigerator at one time. It deactivates after 6 hours.

15. **Reset Air Filters**
After replacing the filter, press and hold for 3 seconds to reset.

16. **Reset Water Filter**
After replacing the filter, press and hold for 3 seconds to reset.

17. Toggles dispenser light On and Off. Press and hold for 5 seconds to enable ambient lighting. Once enabled, press and hold for 2 seconds to disable ambient lighting

NOTE

The recommended settings for a product installed in a kitchen is 37˚F for the fresh food compartment and 0˚F for the freezer.

IMPORTANT

If food is freezing in the fresh food compartment, increase the temperature setting 1 or 2 degrees.

IMPORTANT

Food placed within 1 inch in front of the air ports may cause food to freeze.

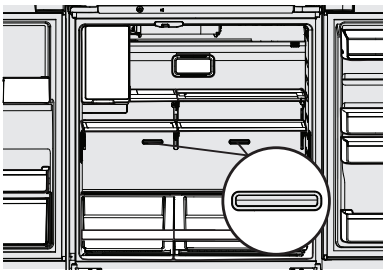

External Dispenser Features (Continued)

NOTE

Control features and alarms may vary by model.

Alarms

Power Outage

In the event of a power failure, the power outage alert will be illuminated once power has been restored and a tone will sound. The alert will only be illuminated if the refrigerator or freezer reached unsafe temperatures during the outage. Press any button to silence the tone.

Water Filter

When illuminated, the water filter needs to be replaced. Change the water filter every 6 months or when 125 gallons of water has been dispensed. To reset, press and hold button for 3 seconds. Tone will sound once it has been reset.

Air Filter

When illuminated, air filter needs to be replaced. Change the air filter every 6 months. To reset, press and hold button for 3 seconds. Tone will sounds once it has been reset.

Door

If a door has been left open for five minutes or more, an alarm will sound and the door open indicator will illuminate on the display. The alarm can be turned off by closing the door or pressing any key. Control panel will return to normal operations after the door is closed.

High Temperature

In the event of a high temperature condition, alarm will sound. The appliance control display will show **HI** on whichever compartment the alarm is detected. An alarm will sound for at least 10 seconds until the alert is acknowledged. This alarm can be reset by touching any key or opening a door.

Sabbath Mode

The Sabbath Mode is a feature that disables portions of the refrigerator and its controls in accordance with observance of the weekly Sabbath and religious holidays within the Orthodox Jewish community.

Sabbath Mode is turned ON and OFF by simultaneously pressing and holding both the **FZ—** and **FF+** for 5 seconds. Other than the High Temp alarm, no audible sounds will occur until the user exits the Sabbath mode. The display shows “Sb” while in Sabbath mode.

In the Sabbath Mode, the High Temp alarm is active for health reasons. For example, if the door is left ajar the High Temp alarm is activated. The refrigerator will function normally once the door is closed, without any violation of the Sabbath/Holidays. The High Temp alarm is permitted when cabinet temperature is outside the safe zone for 20 minutes. The alarm silences itself after 10 minutes while the High Temp icon stays lit until the Sabbath mode is exited.

For further assistance, guidelines for proper usage and a complete list of models with the Sabbath feature, please visit the web at **star-k.org**.

NOTE

While in Sabbath Mode, neither the lights, dispenser, nor the control panel will work until Sabbath Mode is deactivated.

Refrigerator stays in Sabbath Mode after power failure recovery. It must be deactivated with the buttons on the control panel.

NOTE

Although the Sabbath Mode has been initiated, the ice maker will complete the cycle it had already started. The ice cube compartment will remain cold and new ice cubes can be made with standard trays.

To connect the refrigerator to your home internet:

Requirements:

- Apple iOS 11 or later or Android 8.0 OS or later
- A secure password-protected 2.4 or 5 GHz internet connection on a WPA/WPA2 compliant network
- Valid email address and password
- A Wi-Fi router that supports IEEE 802.11 b/g/n
- When setting up your connection, make sure you are in front of the appliance.

Download the free Frigidaire® 2.0 app.

- Open the app and follow the prompts to connect.
- On your product's appliance control display, press any button to wake the appliance display. Press and hold the Connect or button until it beeps and the symbol begins to blink. Some controls may vary slightly. Check your Use & Care Manual.

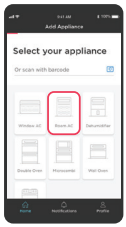

- Enjoy the convenience to remotely control and monitor your appliance!

Once you have connected, please confirm you can see your appliance listed in the app. Please send a command from the app to the appliance. The app should update to show the new settings and the appliance should respond to the command.

Need help?

For connectivity-related assistance, call 1-800-311-4667 Monday - Friday, 9:00 am - 6:00 pm EST or email SmartHelp.US@Frigidaire.com. Frequently Asked Questions can also be found on Frigidaire.com.

Using the ice maker after installation

Before making ice for the first time, be sure to prime the water supply system. Air in new plumbing lines can result in two or three empty ice maker cycles. Furthermore, if the system is not flushed, the first ice cubes may be discolored or have an odd flavor.

Priming the water supply system

CAUTION

For proper dispenser operation, recommended water supply pressure should fall between 30 psi and 100 psi. Excessive pressure may cause the system to malfunction.

1. Begin filling the system by pressing and holding a drinking glass against the dispenser.
2. Keep the glass in this position until water comes out of the dispenser. It may take about 1 $^1/_2$ minutes.
3. Continue dispensing water for about four minutes to flush the system and plumbing connections of any impurities (stopping to empty the glass as necessary).

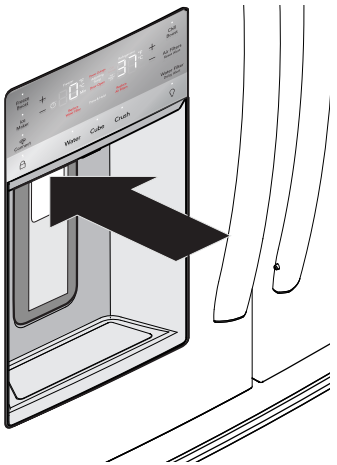

Dispenser

NOTE

The water dispenser has a built-in device that shuts off the water flow after two minutes of continuous use. To reset this shutoff device, simply release the dispenser paddle.

NOTE

After the initial 26 ounces (750 ml), water will remain room temperature until the tank has refilled and been given enough time to chill the next 26 ounces (750 ml) of water. May take up to 8 hours to chill.

Ice Maker Operation & Care

After the refrigerator is installed properly and has cooled for several hours, the ice maker can produce ice within 24 hours. The ice maker will fill the ice bin from the rear. Dispense some ice to force the ice forward in the bin. This will allow the bin to fill completely.

Ice Maker and Storage Bin Capacity

This ice maker should produce 3.2 to 3.7 pounds of ice per 24 hours. The ice bin will hold about 4 pounds of ice.

Turning the ice maker on and off

IMPORTANT

The ice maker is turned on at the factory so it can work as soon as the refrigerator is installed. If it is not possible to connect a water supply, set the ice maker's On/Off feature to Off either by using the display or by pressing the switch (features vary by model). Otherwise, the ice maker's fill valve may make a loud chattering noise when it attempts to operate without water.

Press and hold **Ice Maker** on the external appliance control display for 3 seconds to turn ice production on and off.

NOTE

The ice maker also has a built-in plastic signal arm that automatically stops ice production when the ice bin is full. This signal arm should not be used to manually stop the ice maker.

IMPORTANT

Turning off the ice maker simply disables ice making. Existing ice can still be dispensed, and water can be dispensed.

IMPORTANT

On occasion, unusually small ice cubes may be noticed in the bucket or in dispensed ice. This could occur in normal operation of the ice maker. If happening frequently, it may be an indication of low water pressure or the water filter needs to be replaced. As the water filter nears the end of its useful life and becomes clogged with particles, less water is delivered to the ice maker during each cycle. Remember, if it's been six months or longer since last changing the water filter, replace it with a new one. Poor quality household water may require the filter to be changed more frequently.

CAUTION

If the water supply to the refrigerator is softened, be sure the softener is properly maintained. Chemicals from a water softener can damage the ice maker.

Ice maker/dispenser tips

- If refrigerator is not connected to a water supply or the water supply is turned off, turn off the ice maker as described in the previous section.
- The following sounds are normal when the ice maker is operating:
  - Motor running
  - Ice dropping into ice bin
  - Water valve opening or closing
  - Running water
- If a large quantity of ice is needed at one time, it is best to get cubes directly from the ice bin.
- Ice cubes stored too long may develop an odd flavor. Empty the ice bin as explained below.
- When dispensing cubed ice, it is normal to have a small quantity of little pieces along with the whole cubes.
- To avoid splashing, dispense ice into the container before adding liquids.
- It is normal for ice to fill to the top of the ice bin.

Cleaning the ice maker

Clean the ice maker and ice bin at regular intervals, especially prior to vacation or moving.

1. Turn off the ice maker using the button on the display.
2. Remove the ice bin by lifting upward and pulling straight out.
3. Empty and carefully clean the ice bin with mild detergent. Do not use harsh or abrasive cleaners. Do not place in dishwasher. Rinse with clear water.
4. Allow the ice bin to dry completely before replacing in the freezer.
5. Replace the ice bin. Turn the ice maker on.

Remove and empty the ice bin if:

- An extended power failure (one hour or longer) causes ice cubes in the ice bin to melt and refreeze together after power is restored, jamming the dispenser mechanism.
- The ice dispenser is used infrequently. Ice cubes will freeze together in the bin, jamming the dispenser mechanism. Shake the bin to loosen the cubes, or clean as explained above.

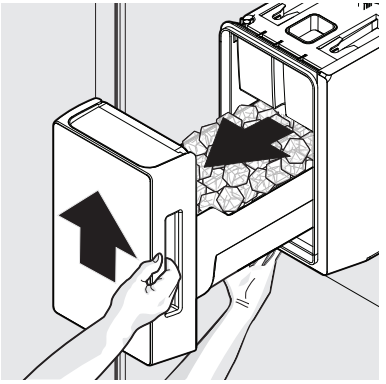

Removing Ice Bin

CAUTION

NEVER use an ice pick or similar sharp instrument to break up the ice. This could damage the ice bin.

To loosen stuck ice, use warm water. Before replacing the ice bin, make sure it is completely dry.

CAUTION

To avoid personal injury or property damage, handle tempered glass shelves carefully. Shelves may break suddenly if nicked, scratched, or exposed to sudden temperature change. Allow the glass shelves to stabilize to room temperature before cleaning. Do not wash in dishwasher.

NOTE

Features may vary according to model.

Shelf positions can easily be adjusted in the fresh food compartments as needed. The shelves have mounting brackets that attach to slotted supports at the rear of each compartment.

Change the Position of a Shelf

1. Remove all food from the shelf.
2. Lift the front edge up and pull the shelf out.
3. Replace by inserting the mounting bracket hooks into the desired support slots.
4. Lower the shelf and lock it into position.

To adjust the flip shelf:

1. Remove food from shelf.
2. Lift the right side edge of shelf upwards and push to the left towards ice maker.

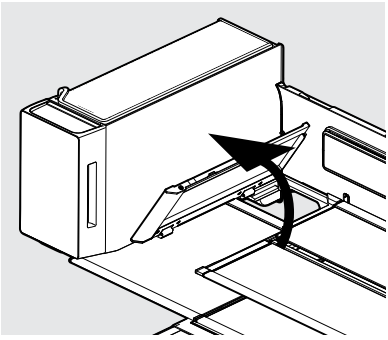

Flip Shelf

To adjust slide-under shelf:

1. Push front half shelf backward toward the rear of the cabinet until the rear half shelf drops down, and then gently continue pushing the front half shelf back and under the rear half shelf.

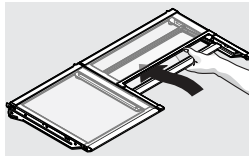

Slide-Under Shelf

Drawers

The refrigerator includes a variety of storage drawers.

CrispSeal Fresh Crisper

Use our crisper to keep your produce fresh for longer, or flip it around to use as an open compartment to easily access items such has beverages, yogurts or snacks.

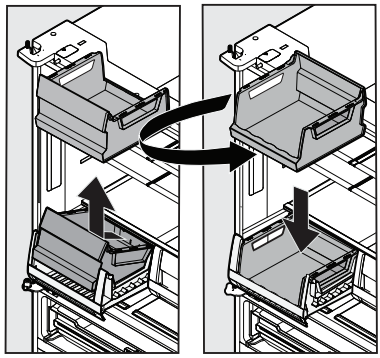

Flexible Storage with our Reversible Bin

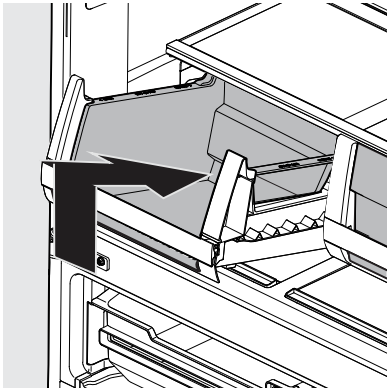

Angle the bin up to reinstall

To remove the CrispSeal Fresh drawer for cleaning:

1. Pull the drawer out until it stops.
2. Lift the front slightly and remove the drawer.

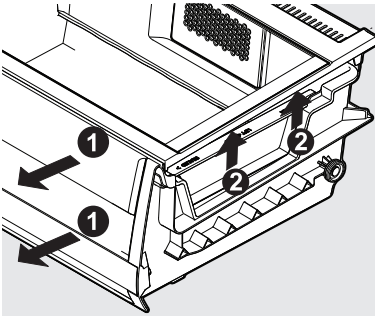

Removing CrispSeal Fresh Drawer

To remove the auto humidity control membrane for cleaning:

1. Reach to back of humidity control cover.
2. Place fingers between the humidity control and the back wall, pull up on cover.
3. Pull cover toward the front of cabinet and remove.

NOTE

Remove the crisper insert and the Produce Keeper Plus filter before washing the crisper.

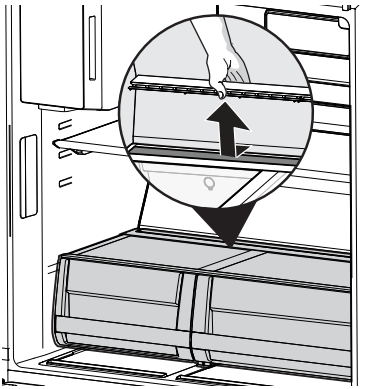

Removing Auto Humidity Control Membrane

4. Remove the humidity membrane from the housing by lifting up sliding over.

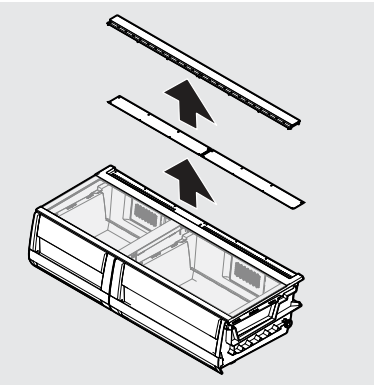

Removing Auto Humidity Control Membrane

5. Clean humidity membrane with hot soapy water.
6. Replace membrane in housing and unit by reversing the steps above.

NOTE

Frigidaire does not recommend replacing the auto-humidity membrane unless it becomes damaged or ruined. If the membrane becomes soiled, it can be washed with soap and water. Ensure membrane is dry before replacing in unit.

SnackZone - Recessed Snack Drawers

These drawers are ideal for storage of deli meats and cheeses.

To open: slide back the cover to allow access to the drawers.

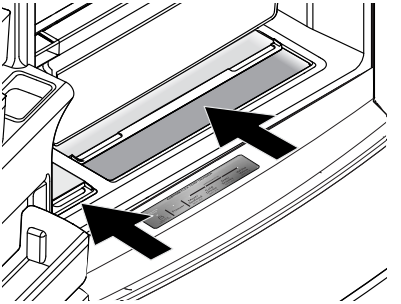

Opening SnackZone Recessed Snack Drawers

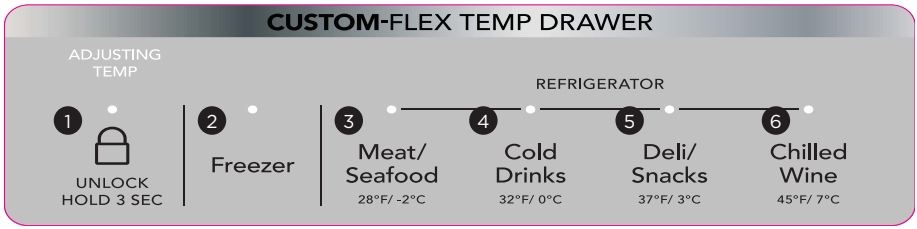

IMPORTANT

Do not use the Custom-Flex™ Temp Drawer to store fresh produce as these items may freeze and cause damage to the fruits and leafy vegetables stored in the drawer.

Using Your Custom-Flex Temp Drawer Controls

1. The drawer automatically defaults to a locked state to prevent any unwanted use. To change the drawer's settings, it first needs to be unlocked. To unlock, press and hold the **UNLOCK** icon for 3 seconds. It will automatically lock after 10 seconds without any interaction.

CAUTION

Do not store glass bottles in the Custom-Flex Temp Drawer when the Temperature setting is in Freezer, Meat/Seafood, or Cold Drink modes. The glass may break and shatter, causing physical harm and injury.

Freezer:

2. To change the drawer temperature when in the freezer temp setting, use the control panel display on the front door. Changing the temp on the display will change both the drawer temp setting **AND** the freezer compartment.

Refrigerator:

3. Choosing **Meat/Seafood** will set drawer temperature to 28°F (-2°C). A tone will sound to confirm choice. Use this setting for short term storage. Any meat to be kept longer than two days should be frozen.
4. Choosing **Cold Drinks** will set drawer temperature to 32°F (0°C). A tone will sound to confirm choice.
5. Choosing **Deli/Snacks** will set drawer temperature to 37°F (3°C). A tone will sound to confirm choice.
6. Choosing **Chilled Wine** will set drawer temperature to 45°F (7°C). A tone will sound to confirm choice.

Custom-Flex Temp Drawer Dividers

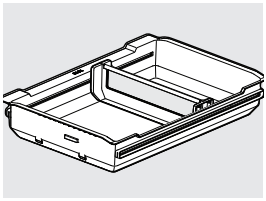

To position drawer dividers, slide left or right. For easier repositioning, dividers do not lock but instead use the weight of stored items to keep the dividers in place. Dividers may shift when opening/closing drawer when fewer items are stored.

Doors

Storage bins

The doors to the fresh food compartment use a system of modular storage bins. All of these bins are removable for easy cleaning. Bins can be adjusted as needed.

Door bins are ideal for storing jars, bottles, cans, and large drink containers. They also enable quick selection of frequently used items.

Adjustable door bins

Some models have adjustable door bins that can be moved to suit individual needs.

To adjust the collapsible door bin:

1. Make sure bin is securely seated on rail in door.
2. Grab one side of bin and place other hand on adjustable side.
3. Pull on side of bin until the bin is adjusted to desired width.

NOTE

It can be difficult to pull out the collapsible bin. Some force may be required.

To move door bin side-to-side:

4. Tilt bin up so the back of the bin is off the door but the hook is still engaged.
5. Slide bin along rail to desired position.
6. Lower bin back into place.

To move door bin up or down:

7. Lift bin up disengaging the hook.
8. Move bin to desired rail location.
9. Push bin hook into rail engaging the hook.

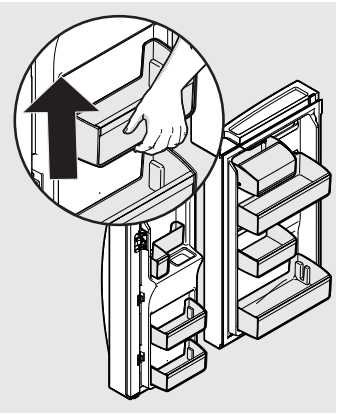

Adjustable Door Bins

Freezer Features

To remove upper freezer drawer:

1. Open freezer compartment completely.
2. Lift up and out to remove upper freezer drawer.
3. Reverse the steps to reinstall drawer.

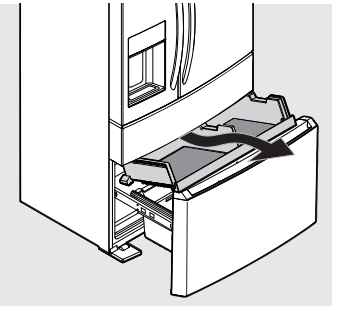

Freezer Drawer

IMPORTANT

There are wheels on the bottom of the drawer. Make sure all wheels are aligned on their respective tracks for proper function. If drawer is not aligned properly, it will cause problems with the door operation.

NOTE

If basket is not resting on stabilizer bar retainer clips, the drawer will not close properly.

To remove freezer basket:

1. Open freezer compartment completely.
2. Lift the basket up and remove.
3. Reverse the steps to reinstall freezer basket.

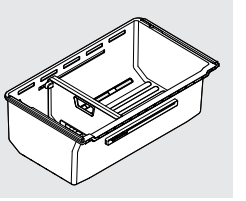

Dividers

Grab hand hold on lower divider and pull up slightly to slide to next position. (The divider cannot be removed.)

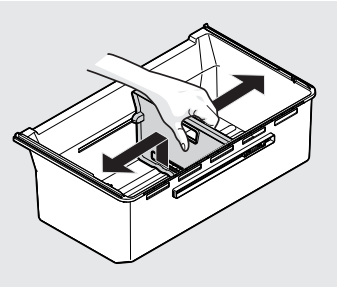

Plastic Lower Basket Divider

Ideas for storing foods

Fresh food storage

- Keep the fresh food compartment between 34°F and 44°F with an optimum temperature of 37°F.
- Avoid overcrowding the refrigerator shelves, which reduces air circulation and causes uneven cooling.
- Avoid placing food in front of air ports. (See **CONTROLS AND SETTINGS** for illustration.)

Fruits and vegetables

- Store fruits and vegetables in crisper drawers, where trapped moisture helps preserve food quality for longer time periods.
- Do not wash items until ready to use. Remove excess water before placing inside unit.
- Wrap any items that have strong odors or high moisture content.

Meat

- Wrap raw meat and poultry separately and securely to prevent leaks and contamination of other foods or surfaces.
- Use the Custom-Flex™ Temp Drawer to store meat/poultry for short-term storage. Any meat to be kept longer than two days should be frozen.

Frozen food storage

- Keep the freezer compartment at 0°F (-18°C) or lower.
- A freezer operates most efficiently when it is at least ⅔ full.

Packaging foods for freezing

- To minimize food dehydration and quality deterioration, use aluminum foil, freezer wrap, freezer bags, or airtight containers. Force as much air out of the packages as possible and seal them tightly. Trapped air can cause food to dry out, change color, and develop an off-flavor (freezer burn).
- Wrap fresh meats and poultry with suitable freezer wrap prior to freezing.
- Do not refreeze meat that has completely thawed.

Loading the freezer

- Prior to grocery shopping, activate **Freeze Boost** so newly purchased food designated for the freezer will be preserved as quickly as possible.
- Activating **Freeze Boost** also will help the freezer more efficiently maintain the selected temperature after placing new purchases with pre-existing frozen foods.
- Avoid adding too much warm food to the freezer at one time. This overloads the freezer, slows the rate of freezing, and can raise the temperature of frozen foods.
- Leave a space between packages, so cold air can circulate freely, allowing food to freeze as quickly as possible.

Ideas for saving energy

Installation

- Locate the refrigerator in the coolest part of the room, out of direct sunlight, and away from heating ducts or registers.
- Do not place the refrigerator next to heat-producing appliances such as a range, oven, or dishwasher. If this is not possible, a section of cabinetry or an added layer of insulation between the two appliances will help the refrigerator operate more efficiently.
- Level the refrigerator so that the doors close tightly.

Temperature settings

- Refer to **CONTROLS AND SETTINGS** for illustration and recommended settings.

Food storage

- Avoid overcrowding the refrigerator or blocking cold air vents. Doing so causes the refrigerator to run longer and use more energy.
- Cover foods and wipe containers dry before placing them in the refrigerator. This cuts down on moisture build-up inside the unit.
- Organize the refrigerator to reduce door openings. Remove as many items as needed at one time and close the door as soon as possible.
- Do not place a hot container directly on a cold shelf. Remember, such an extreme temperature change may damage the glass.

Understanding the sounds coming from the refrigerator

High-efficiency refrigerators may introduce *unfamiliar sounds*. These sounds normally indicate the refrigerator is operating correctly. Some surfaces on floors, walls, and kitchen cabinets may make these sounds more noticeable.

The following is a list of major components in the refrigerator and the *sounds* they can cause:

A **Evaporators** Refrigerant through the evaporators may create a *boiling or gurgling* sound.

B **Evaporator fans** Sounds of *air being forced through the refrigerator* by the evaporator fans may be heard.

C **Defrost heaters** During defrost cycles, water dripping onto the defrost heaters may cause a *hissing or sizzling* sound. After defrosting, a *popping* sound may occur.

D **Automatic ice maker** When ice has been produced, sounds of *ice cubes falling* into the ice bin may be heard. Ice maker fan, water valve activation, and refrigerant gas fluid may create sounds from its operation.

E **Electronic control & automatic defrost control** These parts can produce a *snapping or clicking* sound when turning the cooling system on and off.

F **Condenser fan** Sounds of *air being forced through the condenser* may be heard.

G **Compressor** Modern, high-efficiency compressors run much faster than older models. The compressor may have a *high-pitched hum* or *pulsating* sound.

H **Water valves** Make a *buzzing* sound each time they open to fill the ice maker.

I **Drain pan** (not removable) Sounds of *water dripping* into the drain pan during the defrost cycle may be heard.

J **Condenser** May create minimal sounds *from forced air*.

K **Motorized damper** May produce a *light humming* during operation.

L **Ice dispenser** When dispensing ice, a *snapping, clicking, or popping* sound may be heard.

NOTE

Energy efficient foam in the refrigerator is not a sound insulator.

NOTE

During automatic defrost cycle, a red glow in the back wall vents of the freezer compartment is normal.

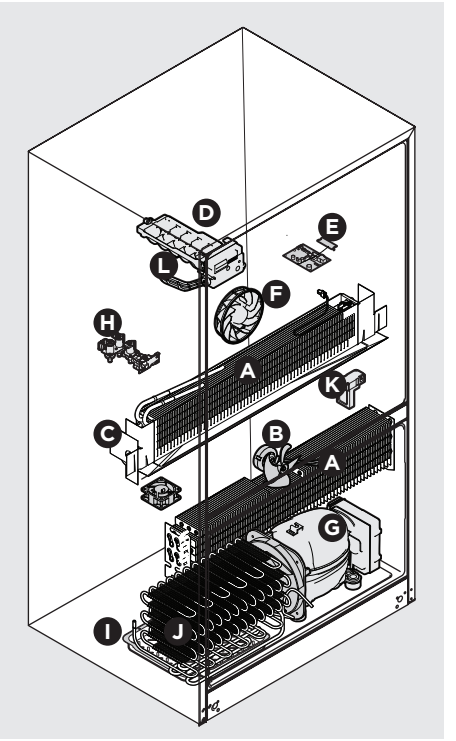

Air Filter (select models)

The air filter is located in the top center of the fresh food compartment.

Replacing the PureAir™ AF-2 Air Filter

To ensure optimal filtering of refrigerator odors, change the air filter every 6 months (**Replace Air Filter** on the appliance control display indicates replacing the filter after 6 months).

1. Remove the air filter cover by squeezing the top and bottom of the cover together and removing from liner.
2. Remove the old filter and discard it.
3. Unpack the new filter and snap it into the filter cover. The open face (carbon media) of the filter should be installed facing outward in the cover.
4. Replace the air filter cover by squeezing the sides and snapping it back into place.

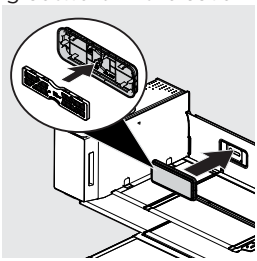

5. To reset, press and hold **Reset Air Filter** on the appliance control display for 3 seconds. Tone will sounds once it has been reset.

Ordering Replacement Air Filters

Order replacement filters online at Frigidaire.com, by calling 1-800-374- 4432 or through the dealer from which the refrigerator was purchased. Frigidaire recommends replacing filters at least once every 6 months.

Here is the product number to request when ordering:

Air Filter Replacement cartridge,
Part #**FRGPAAF2**

Water Filter

The refrigerator is equipped with a water filtering system. The water filtering system filters all dispensed drinking water, as well as the water used to produce ice. The water filter is located at the top right side of the fresh food compartment.

Accessing Your Water Filter

Change the water filter every 6 months to ensure the highest possible water quality. **Replace Water Filter** on the display indicates when to replace the filter after a standard amount of water (125 gallons/473 liters for PurePour Connect™ **PWF-2™**) has flowed through the system.

If the refrigerator has not been used for a period of time (during moving for example), change the filter before reinstalling the refrigerator.

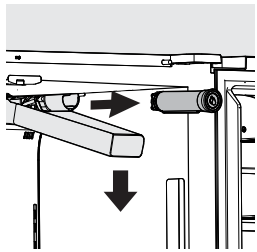

To Remove: Pull the cover forward and the cover will drop down and allow access to the filter. Push on the end/face of the filter to remove it from the unit and discard it.

To Reinstall: Push the cover up toward the liner, and then push it toward the rear of the cabinet. The filter cover will snap back into place.

Ordering Replacement Water Filters

Order replacement filters online at Frigidaire.com, by calling 1-800-374- 4432 or through the dealer from which the refrigerator was purchased. Frigidaire recommends replacing filters at least once every 6 months.

Here is the product number to request when ordering:

PurePour Connect™ **PWF-2™**
Part #**FPPWFU02**

NOTE

When ordering replacement filters, please reorder the same filter type that is currently in the refrigerator.

PurePour Connect™ PWF-2™ Water Filter

Keep safe, great-tasting water flowing with a **PurePour Connect** water filter. Using a **PurePour Connect** water filter:

- **Makes Safer Water Second Nature**
  PurePour Connect water filters are certified to reduce contaminates* and keep great-tasting water flowing for you and your family.
- **Produces Purity You Can Trust**
  Know for certain your **PurePour Connect** water filter is a protector. Counterfeits and knockoffs put your refrigerator and health at risk. Frigidaire Genuine Filters are the smarter, safer choice.
- **Every Drop Gives Back**
  Partnered on sustainability efforts, the use of a **PurePour Connect** water filter saves the cost of bottled water and cuts back on plastic.

*For the complete list, please see Performance DataSheet on Frigidaire.com

PurePour Connect Authentication

Your refrigerator contains a water filter authentication system to protect you from the harm that can occur when using counterfeit filters. Frigidaire recommends to use only the **PurePour Connect** water filter with this appliance. Using any other filter can cause an error to appear on the appliance control display.

Errors can occur:

- If an authentic expired filter is removed and reinserted into the appliance
- If a non-authentic filter is installed or not installed properly.

In the cases above, the appliance control display may show an error code related to the filter authentication, and you will be alerted both on the appliance control display and in the connected app. You can still use dispensing functions while the error is displayed. You can temporarily dismiss the error twice before it displays permanently until you install a new authentic filter into the appliance.

More about the Advanced Water Filter

The **PurePour Connect** ice and water filter system is tested and certified to NSF/ANSI Standards 42, 53, 401 and CSA B483.1 for the reduction of claims specified on the performance data sheet.

Do not use with water that is microbiologically unsafe or of unknown quality without adequate disinfection before or after the system. Use systems certified for cyst reduction on disinfected waters that may contain filterable cysts.

Test & certification results:

- Rated Capacity - 125 gal/453 L for **PurePour Connect** ice and water filter
- Rated service flow - .50 gal/min.
- Operating Temp: Min. 33°F, Max. 100°F
- Maximum Rated Pressure - 100 lbs/in^2
- Recommended Minimum Operating Pressure: 30 lbs/in^2

Replacing your PurePour Connect water filter:

It is not necessary to turn the water supply off to change the filter. Be ready to wipe up any small amounts of water released during the filter replacement.

1. Turn Off the ice maker(s).
2. Pull the water filter cover forward and the cover will drop down to allow access to the filter.
3. Remove the filter by pushing on the end/face of the filter.
4. Slide the old water filter cartridge straight out of the housing and discard it.
5. Unpackage the new filter cartridge. Remove the 2 clear plastic cap covers on the filter connector. Using the alignment guide, slide the filter gently into the filter housing until it stops against the snap-in connector at the back of the housing.
6. Push firmly until the cartridge snaps into place (you should hear a click as the cartridge engages the snap-in connector).

7. Press a drinking glass against the water dispenser while checking for any leaks at the filter housing. Any spurts and sputters that occur as the system purges air out of the dispenser system are normal.
8. Push the cover up toward the liner. Then push the filter cover toward the rear of the cabinet. The filter cover will snap back into place.
9. After filling one glass of water, continue flushing the system for about 4 minutes. See **Priming the water supply system** for more information
10. Once you have properly installed the filter, the authentication process may take up to a few seconds to complete. After authentication is complete, the filter status on the display will automatically update based on the condition of the filter
11. Turn on the ice maker(s).

PureAir PK-2 Produce Keeper Plus™

Keep fruits and vegetables fresher longer with **PureAir Produce Keeper Plus**. Our produce keeper absorbs ethylene gas, the natural gas that causes produce to ripen quicker. Reduce food waste, save money and enjoy fresh-tasting produce with a longer storage life.

Ordering Replacement Filters

Order replacement filters online at Frigidaire.com, by calling 1-800-374-4432 or through the dealer from which the refrigerator was purchased. Frigidaire recommends replacing filters at least once every 12 months.

Here is the product number to request when ordering:

PureAir PK-2
Produce Keeper Plus™

FRPAPK2RF™.

Installing the PureAir Produce Keeper Plus:

1. Remove the plastic wrapper. Insert the packet into the holder in the rear of the Crisper.
2. For optimal results, replace the refill every 12 months along with your air filter.

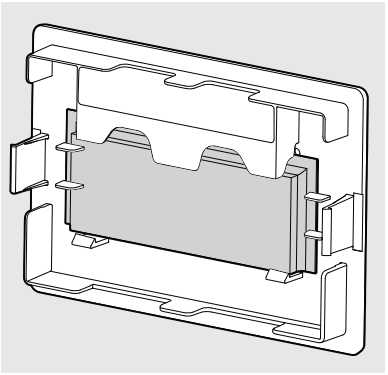

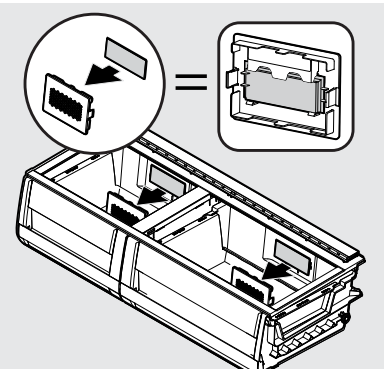

CAUTION

DO NOT OPEN CLOTH POUCH. Keep out of the reach of children.

DO NOT EAT. If ingested, seek medical treatment immediately.

WASH HANDS AFTER HANDLING.

DO NOT SUBMERGE IN WATER.

Care & Cleaning Tips

Keeping the refrigerator clean maintains its appearance and prevents odor build-up. Wipe up any spills immediately and clean the freezer and fresh food compartments at least twice a year.

NOTE

Do not use abrasive cleaners such as window sprays, scouring cleansers, flammable fluids, cleaning waxes, concentrated detergents, bleaches, or cleansers containing petroleum products on plastic parts, interior doors, gaskets, or cabinet liners. Do not use scouring pads or other abrasive cleaning materials.

- Never use metallic scouring pads, brushes, abrasive cleaners, or strong alkaline solutions on any surface.
- Never use CHLORIDE or cleaners with bleach to clean stainless steel.
- Do not wash any removable parts in a dishwasher.

NOTE

When setting temperature controls to turn off cooling, power to lights and other electrical components will continue until the power cord is unplugged from the wall outlet.

- Always unplug the electrical power cord from the wall outlet before cleaning.
- Remove adhesive labels by hand. Do not use razor blades or other sharp instruments which can scratch the appliance surface.
- Do not remove the serial plate. Removal of the serial plate voids the warranty.
- Before moving refrigerator, raise the anti-tip brackets so the rollers will work correctly. This will prevent the floor from being damaged.

Refer to the guide on the next page for details on caring and cleaning specific areas of refrigerator.

CAUTION

- Pull the refrigerator straight out to move it. Shifting it from side to side may damage flooring. Be careful not to move the refrigerator beyond the plumbing connections.
- Damp objects stick to cold metal surfaces. Do not touch refrigerated surfaces with wet or damp hands.

IMPORTANT

When storing or moving refrigerator in freezing temperatures, be sure to completely drain the water supply system. Failure to do so could result in water leaks when the refrigerator is put back into service. Contact a service representative to perform this operation.

Vacation and moving tips

Occasion	Tips
Short Vacations	• Leave refrigerator operating during vacations of 3 weeks or less. • Use all perishable items from refrigerator compartment. • Turn automatic ice maker off and empty ice bucket, even if only away a few days.
Long Vacations	• Remove all food and ice if leaving for one month or more. • Turn the cooling system off (see **CONTROLS AND SETTINGS** for the location of **On**/**Off**) and disconnect the power cord. • Turn the water supply valve to close. • Clean interior thoroughly. • Leave both doors open to prevent odors and mold build-up. Block doors open if necessary.
Moving	• Unplug the unit. • Remove all food and ice. • If using a handcart, load from the side. • Adjust rollers all the way up to protect them during sliding or moving. • Pad cabinet to avoid scratching surface.

Care & Cleaning Tips		
Part	**What To Use**	**Tips and Precautions**
Interior & Door Liners	• Soap and water • Baking soda and water	Use two tablespoons of baking soda in one quart of warm water. **Be sure to wring excess water out of sponge or cloth before cleaning around controls, light bulb or any electrical part.**
Door Gaskets	• Soap and water	Wipe gaskets with a clean soft cloth.
Drawers & Bins	• Soap and water	Use a soft cloth to clean drawer runners and tracks.
Glass Shelves	• Soap and water • Glass cleaner • Mild liquid sprays	Allow glass to warm to room temperature before immersing in warm water.
Exterior & Handles	• Soap and water • Non Abrasive Glass Cleaner	Do not use commercial household cleaners containing ammonia, bleach or alcohol to clean handles. Use a soft cloth to clean smooth handles or exterior. **DO NOT use a dry cloth to clean smooth doors.**
Exterior & Handles **(Stainless Steel Models Only)**	• Soap and water • Stainless Steel Cleaners such as **Frigidaire** *Ready***Clean™ Stainless Steel Cleaner**.	**Never use CHLORIDE or cleaners with bleach to clean stainless steel.** Clean stainless steel front and handles with non-abrasive soapy water and a dishcloth. Rinse with clean water and a soft cloth. Use a non-abrasive stainless steel cleaner. These cleaners can be purchased at most home improvement or major department stores. Always follow manufacturer's instructions. Do not use household cleaners containing ammonia or bleach. **NOTE: Always clean, wipe and dry with the grain to prevent scratching.** Wash the rest of the cabinet with warm water and mild liquid detergent. Rinse well, and wipe dry with a clean soft cloth. Stainless steel cleaning supplies can be purchased from Frigidaire.com

36 TROUBLESHOOTING

Let us help you troubleshoot your concern! This section will help you with common issues. If you need us, visit our website, chat with an agent, or call us. We may be able to help you avoid a service visit. If you do need service, we can get that started for you!

1-800-374-4432 (United States)
Frigidaire.com

1-800-265-8352 (Canada)
Frigidaire.ca

Concern	Potential Cause	Common Solution
Automatic Ice Maker		
Ice maker is not making any ice.	• Ice maker is turned off.	• Press and hold the ice maker button on the appliance control display for 3 seconds. The LED indicator will illuminate to indicate that the ice maker is ON.
	• Refrigerator is not connected to water line or water valve is not open.	• Connect the unit to the household water supply and ensure the water valve is open.
	• The water supply line is kinked.	• Ensure that the supply line does not kink when the refrigerator is pushed into place against the wall.
	• The water filter is not seated properly.	• Remove and re-install the water filter. Be sure to seat it fully into the locked position.
	• The water filter may be clogged with foreign material.	• If water dispenses slowly or not at all, or if the filter is six months old or older, it should be replaced.
Ice maker is not making enough ice.	• Ice maker is producing less ice than expected.	• The ice maker will produce approximately 3.2 to 3.7 pounds of ice every 24 hours depending on usage conditions.
	• The water filter may be clogged with foreign material.	• If water dispenses slower than normal, or if the filter is six months old or older, it should be replaced.
	• The water supply line is kinked.	• Ensure that the supply line does not kink when the refrigerator is pushed into place against the wall.
	• Saddle valve on cold water pipe is clogged or restricted by foreign material.	• Turn off household water line valve. Remove valve. Ensure that valve is not a self-piercing saddle valve. Clean valve. Replace valve if necessary.
	• Water pressure is extremely low. Cut-off and cut-on pressures are too low (well systems only).	• Have someone turn up the cut-off and cut-on pressure on the water pump system (well systems only).
	• Reverse osmosis system is in regenerative phase.	• It is normal for a reverse osmosis system to be below 20 psi during the regenerative phase.
	• Heavy traffic, opening or closing of the doors excessively.	

Concern	Potential Cause	Common Solution
Automatic Ice Maker (continued)		
Ice cubes are freezing together.	• Ice cubes are not being used frequently enough or interruption of power for prolonged time. • Ice cubes are hollow (shells of ice with water inside). The hollow cubes break open in the bin and leak their water onto existing ice, which causes it to freeze together.	• Remove ice container and discard ice. The ice maker will produce fresh supply. Ice should be used at least twice weekly to keep the cubes separated. • This generally occurs when the ice maker does not get enough water. This is usually the result of a clogged water filter or restricted water supply. Replace the water filter and if the condition still occurs, check to see if the water valve is not turned on all the way or if there is a kinked water supply line.
Dispenser		
Dispenser will not dispense ice.	• There is no ice in the bin to be dispensed. • The refrigerator doors are not completely closed. • Dispenser paddle has been pressed too long and the dispenser motor has overheated.	• See the "**Ice maker is not making any ice**" section. • Be sure the refrigerator doors are completely closed. • The motor overload protector will reset in about three minutes and then ice can be dispensed.
Ice dispenser is jammed.	• Ice has melted and frozen around auger due to infrequent use, temperature fluctuations, and/or power outages. • Ice cubes are jammed between ice maker and back of ice container.	• Remove ice container, thaw, and empty the contents. Clean container, wipe dry, and replace in proper position. When new ice is made, dispenser should operate. • Remove ice cubes that are jamming the dispenser.
Dispenser will not dispense water.	• Water filter not seated properly. • Water filter is clogged. • Household water line valve is not open.	• Remove and reinstall the water filter. For *Pure***Pour Connect**, be sure to push the filter in all the way until it clicks into place and is secured inside of the water filter housing. • Replace filter cartridge. Be sure to push filter all the way in until it clicks into place and is secured inside of the water filter housing. • Open household water line valve. See **CONCERN** column **AUTOMATIC ICE MAKER.**

Concern	Potential Cause	Common Solution
Water not cold enough.	• As warmer tap water goes through the filter and enters the water supply system, the chilled water is pushed through to the dispenser. Once the chilled water is used up, it will take several hours to bring the freshly replaced water to a cooler temperature.	• Add ice to cup or container before dispensing water. Note: Only first 26 ounces are chilled.
Water has an odd taste and/or odor.	• Water has not been dispensed for an extended period of time. • Unit not properly connected to cold water line.	• Draw and discard 10-12 glasses of water to freshen the supply. • Connect unit to cold water line that supplies water to the kitchen faucet.
Opening/Closing Of Doors/Drawers		
Door(s) will not close.	• Door was closed too hard, causing other door to open slightly. • Refrigerator is not level. It rocks on the floor when moved slightly. • Refrigerator is touching a wall or cabinet. • Food/packaging is obstructing the door from closing. • Flipper mullion on left fresh food door is not in the correct position.	• Close both doors gently. • Ensure floor is level and solid, and can adequately support the refrigerator. Contact a carpenter to correct a sagging or sloping floor. • Ensure floor is level and solid, and can adequately support the refrigerator. Contact a carpenter to correct a sagging or sloping floor. • Make sure there is no food/ packaging blocking the doorway. • Ensure the flipper mullion is in the correct position to allow the door to close. (See "**Flipper Mullion**" in **INSTALLATION**.)
Drawers are difficult to move.	• Food is touching shelf on top of drawer. • Track that drawers slide on is dirty.	• Remove top layer of items in drawer. • Ensure drawer is properly installed on track. • Clean drawer, rollers, and track. See **CARE AND CLEANING**.

Concern	Potential Cause	Common Solution
Running of Refrigerator		
Compressor does not run.	• Refrigerator is in defrost cycle. • Plug at electrical outlet is disconnected. • House fuse blown or tripped circuit breaker. • Power outage.	• This is normal for a fully automatic defrost refrigerator. The defrost cycle occurs periodically, lasting about 30 minutes. • Ensure plug is tightly pushed into outlet. • Check/replace fuse with a 15 amp time-delay fuse. Reset circuit breaker. • Check house lights. Call local electric company.
Refrigerator seems to run too much or too long.	• The variable speed compressor is designed to run 100% of the time except during the defrost cycle. At times it will run faster, such as after a defrost cycle.	• It is normal for the compressor to run continuously except during defrost mode.
Digital Temperature Setting Display		
Digital temperature displays an error.	• Electronic control system has detected a performance problem.	• For assistance with any errors or codes flashing in the appliance control display call 1-800-374-4432.
Water/Moisture/Frost Inside Refrigerator		
Moisture collects on inside of refrigerator walls.	• Weather is hot and humid. • Flipper mullion	• The rate of frost buildup and internal sweating increases. • Adjust flipper mullion. (See "**To adjust the flipper mullion**" in **INSTALLATION**.)
Water collects on bottom side of drawer cover.	• Vegetables contain and give off moisture.	• It is not unusual to have moisture on the bottom side of the cover. • Both crispers contain an automatic humidity control, which should adjust automatically to the varying levels of moisture inside the drawer without creating additional condensation or drying out the air inside the crisper drawer, works with various types of produce. If excess moisture is noticed, check to verify humidity membrane is not damaged and replace as necessary.
Water collects in bottom of drawer.	• Washed vegetables and fruit drain while in the drawer.	• Dry items before putting them in the drawer. Water collecting in bottom of drawer is normal.

Concern	Potential Cause	Common Solution
Water/Moisture/Frost Outside Refrigerator		
Moisture collects on outside of refrigerator or between doors.	• Weather is humid.	• This is normal in humid weather. When humidity is lower, the moisture should disappear.
Food/Drinks in Fresh Food Compartment/Custom-Flex™ Drawer		
Food is freezing.	• Temperature setting is too low. • Temperature sensor is covered by food (right side of fresh food area). • Food is covering the air ports.	• Move the setting to a higher degree. • Allow space for air flow to the sensor. • Allow space between the air ports and the food.
Connectivity		
Difficulty connecting the smart appliance.	• Trouble connecting the smart appliance to your wifi network or experiencing an issue with the app.	• Please visit Frigidaire.com and select the Owner Support section to view “Frequently Asked Questions”.
Appliance has lost connection to the network or shows appliance is not connected.	• Possible power outage. • Possible modem failure. • Possible router failure. • Possible internet outage in the area.	• Check house lights. Call local electric company. • Check appliance for functionality (i.e. open doors and make sure lights work, press a key on the control and see if it responds). • Check that the router and modem are power on and connected to the internet. • Ensure that other connected devices in the home can communicate with the internet.

LIMITED WARRANTY

Your appliance is covered by a one year limited warranty. For one year from your original date of purchase, Electrolux will pay all costs for repairing or replacing any parts of this appliance that prove to be defective in materials or workmanship when such appliance is installed, used and maintained in accordance with the provided instructions.

Exclusions

This warranty does not cover the following:

1. Products with original serial numbers that have been removed, altered or cannot be readily determined.
2. Product that has been transferred from its original owner to another party or removed outside the USA or Canada.
3. Rust on the interior or exterior of the unit.
4. Products purchased “as-is” are not covered by this warranty.
5. Food loss due to any refrigerator or freezer failures.
6. Products used in a commercial setting.
7. Service calls which do not involve malfunction or defects in materials or workmanship, or for appliances not in ordinary household use or used other than in accordance with the provided instructions.
8. Service calls to correct the installation of your appliance or to instruct you how to use your appliance.
9. Expenses for making the appliance accessible for servicing, such as removal of trim, cupboards, shelves, etc., which are not a part of the appliance when it is shipped from the factory.
10. Service calls to repair or replace appliance light bulbs, air filters, water filters, other consumables, or knobs, handles, or other cosmetic parts.
11. Surcharges including, but not limited to, any after hour, weekend, or holiday service calls, tolls, ferry trip charges, or mileage expense for service calls to remote areas, including the state of Alaska.
12. Damages to the finish of appliance or home incurred during installation, including but not limited to floors, cabinets, walls, etc.
13. Damages caused by: services performed by unauthorized service companies; use of parts other than genuine Electrolux parts or parts obtained from persons other than authorized service companies; or external causes such as abuse, misuse, inadequate power supply, accidents, fires, or acts of God.

DISCLAIMER OF IMPLIED WARRANTIES; LIMITATION OF REMEDIES

CUSTOMER’S SOLE AND EXCLUSIVE REMEDY UNDER THIS LIMITED WARRANTY SHALL BE PRODUCT REPAIR OR REPLACEMENT AS PROVIDED HEREIN. CLAIMS BASED ON IMPLIED WARRANTIES, INCLUDING WARRANTIES OF MERCHANTABILITY OR FITNESS FOR A PARTICULAR PURPOSE, ARE LIMITED TO ONE YEAR OR THE SHORTEST PERIOD ALLOWED BY LAW, BUT NOT LESS THAN ONE YEAR. ELECTROLUX SHALL NOT BE LIABLE FOR CONSEQUENTIAL OR INCIDENTAL DAMAGES SUCH AS PROPERTY DAMAGE AND INCIDENTAL EXPENSES RESULTING FROM ANY BREACH OF THIS WRITTEN LIMITED WARRANTY OR ANY IMPLIED WARRANTY. SOME STATES AND PROVINCES DO NOT ALLOW THE EXCLUSION OR LIMITATION OF INCIDENTAL OR CONSEQUENTIAL DAMAGES, OR LIMITATIONS ON THE DURATION OF IMPLIED WARRANTIES, SO THESE LIMITATIONS OR EXCLUSIONS MAY NOT APPLY TO YOU. THIS WRITTEN WARRANTY GIVES YOU SPECIFIC LEGAL RIGHTS. YOU MAY ALSO HAVE OTHER RIGHTS THAT VARY FROM STATE TO STATE.

If You Need Service

Keep your receipt, delivery slip, or some other appropriate payment record to establish the warranty period should service be required. If service is performed, it is in your best interest to obtain and keep all receipts. Service under this warranty must be obtained by contacting Electrolux at the addresses or phone numbers below.

This warranty only applies in the USA and Canada. In the USA, your appliance is warranted by Electrolux Major Appliances North America, a division of Electrolux Home Products, Inc. In Canada, your appliance is warranted by Electrolux Canada Corp. Electrolux authorizes no person to change or add to any obligations under this warranty. Obligations for service and parts under this warranty must be performed by Electrolux or an authorized service company. Product features or specifications as described or illustrated are subject to change without notice.

USA
1-800-374-4432
Frigidaire
10200 David Taylor Drive
Charlotte, NC 28262

Electrolux

Canada
1.800.265.8352
Electrolux Canada Corp.
5855 Terry Fox Way
Mississauga, Ontario, Canada
L5V 3E4

FRIGIDAIRE

welcome *home*

Our home is your home. Visit us if you need help with any of these things:

 owner support

 accessories

 service

 registration

(See your registration card for more information.)

Frigidaire.com
1-800-374-4432

Frigidaire.ca
1-800-265-8352