9100 Series Refrigerators

Operator's Guide for Models:

9162 9182
9163 9183

FOR YOUR SAFETY

Do not store or use gasoline or other flammable vapors and liquid in the vicinity of this or any other appliance. Vapors can flash back and ignite liquids.
If you smell gas:
1. Open windows
2. Do not touch any electrical switches
3. Extinguish any open flame

⚠ WARNING

Improper installation, adjustment, alteration, service, or maintenance can cause injury or property damage. Read this Guide. For assistance or additional information consult a qualified installer, service agency, or the gas supplier.

NORCOLD
P O BOX 4248
SIDNEY OH 45365-4248

Part No.: 618612C(96-09)

Table of Contents

Requirements

Electrical and LP Gas 2

Safety Awareness..... 3

Introduction..... 4

About Your Refrigerator

Storage Volume 4

Leveling 4

Freezer Compartment 4

Fresh Food Compartment 4

Defrost and Clean 4

Crisper 5

Door Storage 5

Moisture Reduction Heater 5

Interior Light 5

Door Handle 5

Door Seals 6

Adjustable Shelves 6

Operating Controls

Operating Instructions 7

Auto Mode 7

Manual Mode 8

Gas Operation Only 8

Diagnostics

Diagnostics and Corrective Action 8

Maintenance

Maintenance Requirements 9

Refrigerator Storage 10

Refrigerator Removal & Replacement 10

Burner Flame Inspection 10

Clean Cooling System Flue..... 10

Burner Orifice Removal & Cleaning..... 11

Fuse Replacement Procedure..... 12

No Refrigeration..... 13

Wiring Pictorials 14

Warranty..... 15

Electrical and LP Gas Requirements

This refrigerator is designed to operate with these energy sources:

LP Gas Operation	11 inches Water Column Propane 12 volts DC control voltage (10.5 vDC min. to 15.4 vDC max.)
AC Operation	120 volts AC range (108 VAC min. to 132 VAC max.) 12 volts DC control voltage (10.5 VDC min to 15.4 VDC max.)
DC Operation	**3-Way Models Onl**y. 12 volts DC (11.5 VDC min. to 15.4 VDC max.)

Operating in excess of these specifications can damage the refrigerator's electrical circuit, related components and voids the refrigerator's warranty.

Read this Guide carefully and be thoroughly acquainted with its contents before operating this refrigerator

NOTICE: This refrigerator is not approved for free-standing use or for marine applications. This appliance is equipped for LP gas and cannot be converted to any other fuels (natural gas, butane, ETC.).

Be alert to potential Safety Hazards when this Safety Alert Symbo ⚠ appears on your refrigerator or in this Guide.

A word (**WARNING** or ***Caution***) identifies the severity of the Safety Hazard. Carefully read the descriptions to understand their meaning. They are for your safety.

⚠ **WARNING** ***means a presence of a hazard that can cause severe personal injury, death, or substantial property damage if ignored.***

⚠

Always apply these safety precautions when operating this refrigerator. Failure to heed these precautions can result in substantial property damage, severe personal injury, or death.

CAUTION means a presence of a hazard that will or can cause a minor personal injury or substantial property damage if ignored.

- Do not store or use gasoline, flammable vapors or liquids near this refrigerator. Do not store combustible materials in back of refrigerator. They create a safety hazard and inhibit air flow, reducing cooling efficiency.
- Improper installation, adjustment, alteration, servicing or maintenance of this refrigerator can cause personal injury and property damage. Service and maintenance is to be done by your dealer or a Norcold authorized service center. Use extreme care when working with or near a propane gas system. Do not smoke or create sparks. Do not use an open flame to check supply piping and fittings for leaks.
- Never cut or remove the grounding prong from the AC power cord. Do not use a two-prong adapter or an extension cord. The 120 volt AC circuit must comply with any applicable local, state, or national codes.
- To prevent a possible electrical fire, follow Norcold's wire and fuse size requirements (See *Installation Requirements) and applicable state, local, or national* codes.
- Protect all wiring from physical damage, vibration, and excessive heat.
- Disconnect both AC and DC power sources from refrigerator when doing routine maintenance. Servicing of this refrigerator **must** be made by a qualified service technician.
- Keep liquids away from electrical connections. Many liquids are electrically conductive and could cause serious arcing damage and fires.
- Never bend, drop, drill, weld, manipulate, or hammer refrigerant system. Doing so can cause system to rupture, releasing chemicals that can irritate or seriously burn eyes and skin.
- Do not repair or recharge refrigerant system. A defective refrigerant system must be replaced by a qualified RV appliance repair technician.
- Do not touch cold surfaces of the freezer. Skin may stick to cold surfaces.
- This refrigerator has sharp edges and corners at rear. To prevent cuts or abrasions, wear cut resistant gloves.
- Surfaces at rear of refrigerator are extremely hot and can cause minor burns. Turn refrigerator off for several hours before moving or servicing.
- When discarding a refrigerator, remove all doors to prevent accidental entrapment and suffocation.
- Never bypass or alter refrigerator's electrical components or features.
- Do not operate refrigerator off level for extended periods of time. The operational limits are 3 degrees off-level side to side and 6 degrees off-level front to back. Do not operate refrigerator when it is not cooling.

Welcome to the new age of Norcold.

Your refrigerator is designed to provide the ultimate in cooling satisfaction and to serve you reliably for years to come. Norcold refrigerators are the only RV refrigerators manufactured in America. Your 9100 series refrigerator is the only RV refrigerator to offer a standard limited 2-year warranty. Norcold also offers additional warranty coverage (2+3 Plan) which extends the standard 2-year warranty an additional 3 years for a total of 5 years protection. To activate your limited warranty and to receive an invitation to participate in the 2 + 3 Plan, complete and mail your New Age of Cold warranty registration in your refrigerator information packet.

Norcold is committed to providing products in harmony with the environment. This is demonstrated by our use of environment friendly CFC-free insulation. Your new Norcold meets all environmental safety standards.

If a problem occurs with your refrigerator, see the Diagnostics section. This section describes the diagnostic indicators that can help you with minor problems if they occur. If a problem arises that is not in the Diagnostics section, contact any of the 700 service centers throughout the United States and Canada for assistance. Booklets listing the service center locations are supplied with your refrigerator.

Help Us Help You. Complete and mail your New Age of Cold warranty registration today. Record the refrigerator's model and serial numbers. These numbers are on the serial plate inside the refrigerator. Use these numbers when receiving service or when corresponding about your refrigerator.

Model Number_____ Serial Number_____

This appliance is designed for storage of foods, storage of frozen foods, and freezing ice.

Storage Volume

Models - 9162, 9163 = 6.3 cu. ft. Models - 9182, 9183 = 7.5 cu. ft.

Leveling

Comfortable vehicle leveling is well within the operating requirements of 3 degrees off level side-to-side and 6 degrees off level front-to-back (looking at the front of the refrigerator). Continued operation outside of these limits can result in irreparable damage to the cooling system.

Freezer Compartment

The freezer compartment is not intended for quick freezing of foods. It keeps food frozen. The freezer shelf adjusts or removes to meet your storage needs.

Fresh Food Compartment

The fresh food compartment stores and cools food. For best cooling performance, air must circulate within the fresh food compartment. ***Do not cover the shelves with paper, plastic, etc.***

To reduce frost on the cooling fins, cover liquids and moist foods. Do not place hot foods in the compartment, and do not leave the door open longer than needed.

Allow the refrigerator to cool for 8 hours before loading foods. Loading a warm refrigerator with warm food increases the cool down period.

Defrost and Clean the Interior

Your refrigerator is not frost free. It requires periodic defrosting. To defrost, turn the refrigerator off. Empty the freezer and fresh food compartments. Place a pan of hot tap water in the freezer to reduce the defrosting time. Leave the drip tray under the cooling fins. After frost melts, empty the drip tray and clean the refrigerator.

Add a small quantity of mild dish soap to lukewarm water and wash the interior. ***Do not use abrasive cleansers; they can damage the refrigerator's interior surfaces***. Rinse both compartments with a solution of baking soda and water (one tablespoon of baking soda to one quart of water) to freshen the interiors and neutralize odors. Wipe with a soft dry cloth to prevent water spots. Clean the door gaskets in the same way as the refrigerator interior.

Crisper

The crisper in the bottom of the fresh food compartment, provides storage to preserve fruit and vegetable freshness. Wrap vegetables with strong odors so the odor does not transmit to other foods. Keep the crisper pushed in all the way. **IMPORTANT!** ***The crisper is not dishwasher safe.***

Door Storage

The door storage areas hold items such as 2-liter bottles, half-gallon milk cartons, pop cans, ketsup bottles, and other commonly used items.

Moisture Reduction Heater

This refrigerator has a heater to prevent moisture from forming on the center divider between the freezer and fresh food compartment doors. The heater starts and stops when the refrigerator is turned **On** and **Off**.

Interior Light

Caution: Do not replace with a higher wattage bulb. Higher wattage bulbs can damage the interior surface of the fresh food compartment.

The interior light is at the top of the fresh food compartment. The light activates or deactivates when the refrigerator is turned on or off. The light turns on when the fresh food compartment door opens and off when the door closes. If the fresh food compartment door stays open for more than 2 minutes, the light turns off. Close the door (listen for a click) to reset the controls and light.

To replace the light bulb:

Disconnect the 12 VDC from the rear of the refrigerator.

Slide the light cover toward the front of the fresh food compartment and pull it away from the light bracket.

Remove the bulb from the light bracket.

Replace the bulb with a GE #214-2 bulb (use ***only*** this replacement bulb which can be purchased from most retail automotive centers).

Re-install light cover and reconnect 12 VDC.

Figure 1

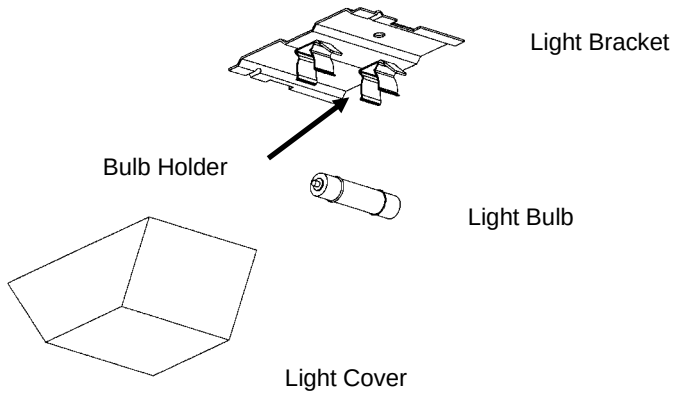

Door Handle

The refrigerator door handles use a latch to insure complete door closure. The handle has a storage latch to enable the doors to be left partially open to prevent odor build-up during extended shut-down periods.

Improtant! Do not use storage latch as a travel latch. Storage latch allows doors to remain partially open.

To use the storage latch, open the door about 1/2 inch and slide the storage latch into the cut-out on the strike plate.

Figure 2

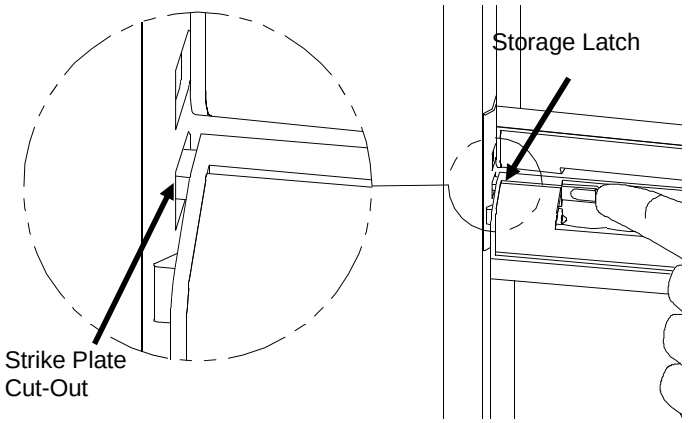

Figure 3

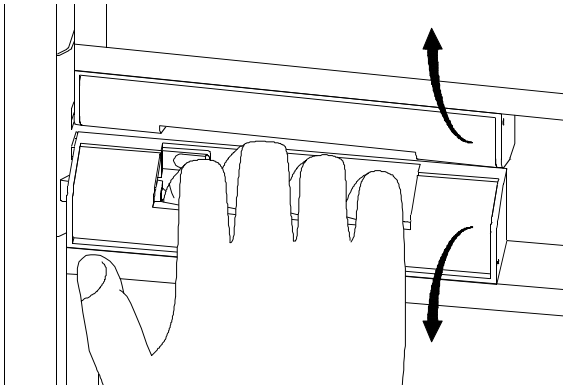

To open the door, rotate the handle away from the refrigerator.

When closing, push the door closed until a click is heard, meaning the door is latched.

Figure 4

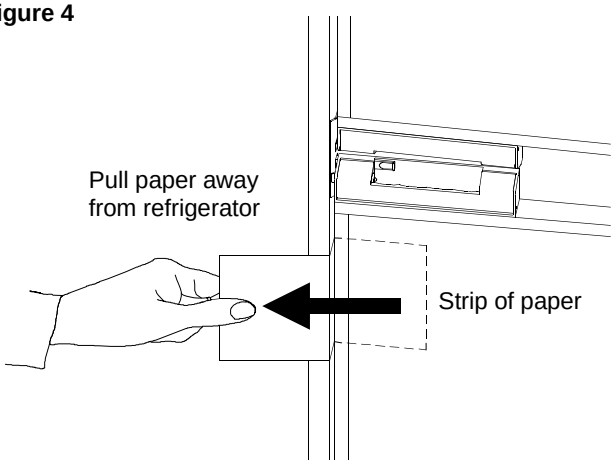

Checking Door Seals

To insure cooling efficiency and to prevent frost formation, the door gaskets must seal completely.

To check for proper door seal, lay a strip of paper between the gasket and the refrigerator. Close the door and pull out the paper. A drag should be noticed. Repeat all around the door. If the paper does not have a noticeable drag, the gasket is not sealing. Contact your dealer or a Norcold service center to correct this.

Figure 5

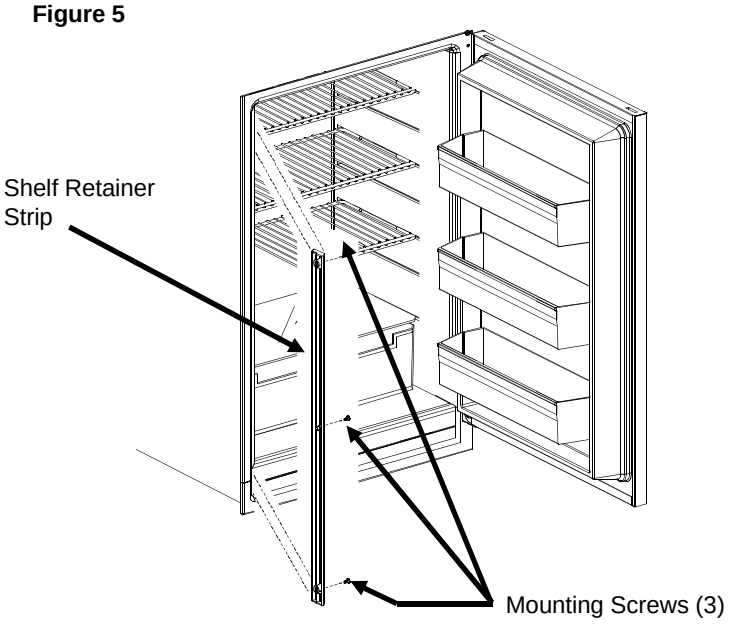

Adjustable Shelves

Multiple shelf grooves in the freezer and fresh food compartments allow you to remove the shelves for cleaning and to arrange the shelves to fit your needs. To move the shelf in the freezer, pull the shelf forward, select the new location, and slide the shelf into place.

To move the shelves in the fresh food compartment; use a Phillips screwdriver, remove 3 screws from the shelf retainer strip. Lift and pull the retainer strip away from the refrigerator. Pull the shelves forward to remove, select the new location, then slide the shelf into place. Reinstall the retainer strip and secure with the screws.

To prevent child entrapment and shelf movement, insure the shelf retainer is reinstalled.

ith the 3 screws.

Figure 6

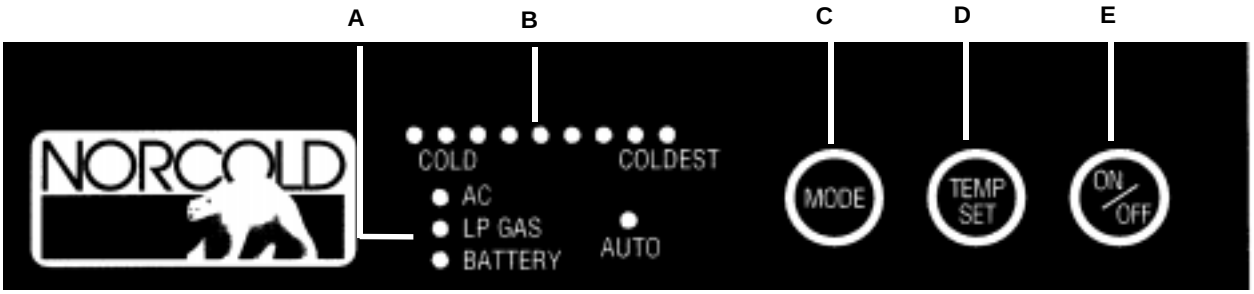

Refrigerator Controls and Operating Instructions

A 12 VDC supply is required to maintain the refrigerator's operating control functions. The refrigerator receives its DC power from the vehicle's 12 volt system; either an auxiliary battery, a converter, or the engine battery. The 12 VDC system supplies power to the refrigerator and to other DC components in the vehicle.

The control panel (between the freezer and fresh food compartments), conveniently locates all refrigerator functionality. The AC, LP GAS, Battery, and AUTO LED's (A) light indicating the operating mode.

ON/OFF (E) turns the refrigerator On or Off. If the refrigerator is Off, press this to turn it On and set the mode to AUTO. If the unit is On, press this for *2 seconds* to turn the refrigerator Off.

Press and hold **MODE** (C) to cycle through the choices; one AUTO and three manual modes (AC, LP GAS, or BATTERY-3 way models only). The refrigerator does not switch to the new mode until you release **MODE**.

TEMP SET (thermostat) (D) sets the refrigerator and freezer temperatures in both gas and electric operation. Press and hold **TEMP SET** to select the temperature. The temperature settings are LEDs (B). The lighted LED indicates the temperature, with COLD on the left and COLDEST on the right. The temperature LED turns off after 10 seconds. Quickly press and release TEMP SET to display the temperature setting.

Auto Mode

When AUTO mode is selected, the control automatically selects the energy source using this scheme:

- When 120 VAC is available, the AUTO and AC LEDs light, meaning the refrigerator is operating on AC. After 10 seconds, the AC LED turns off and only the AUTO LED stays lit. Press and quickly release **MODE** to display the operating mode.
- If 120 VAC is not available, the refrigerator switches to gas operation. The AUTO and LP GAS LEDs light. After 10 seconds, the LP GAS LED turns off and only the AUTO LED stays lit. Press and quickly release **MODE** to display the operating mode.
- If 120 VAC or LP gas is not available, the refrigerator switches to DC (3-Way models only). The AUTO and BATTERY LEDs light. After 10 seconds, the BATTERY LED turns off and only the AUTO LED stays lit. Press and quickly release **MODE** to display the operating mode. DC operation is not as efficient as LP Gas or AC operation. ***DC electric should not be used to initially cool the refrigerator***. Only use DC when the other modes are unavailable (for example; while in transit).

During operation in AUTO mode, if a higher priority energy source becomes available, the controls stop using the current energy source and switch to the higher priority energy source. If AC becomes available while the refrigerator is in AUTO LP GAS mode, the refrigerator switches to AUTO AC operation.

If an operating mode is not functional, its LED flashes and the refrigerator tries to operate in a lower energy priority source. If a lower energy priority source is not available, the LED continues to flash, and the refrigerator stops operating until the energy source is corrected. See *Diagnostics* for corrective actions.

Manual Mode

Press and hold **MODE** until the AUTO LED goes out and the desired operating mode lights. Unlike AUTO mode, the operating mode LED stays lit until an alternate mode is selected. If the energy source is interrupted in MANUAL mode, the corresponding LED flashes, and the refrigerator stops operating until an alternate energy source is selected or the problem is corrected. See *Diagnostics* for corrective actions.

AUTO and MANUAL Modes - Gas Operation Only

If gas does not ignite within 30 seconds, the refrigerator's gas valve automatically closes and the operating controls select an alternate energy source (AUTO Mode) or revert to a stand-by mode where the LP GAS LED flashes. The LED flashes until the refrigerator is turned OFF and then ON. If gas does not ignite after several attempts, check input gas supply, or consult your dealer or a Norcold authorized service center. Select a different operating mode by pressing and holding **MODE**. The refrigerator does not switch to the new operating mode until you release **MODE**.

Backup Operating System (BOS)

This refrigerator has a Back-Up Operating System to allow the refrigerator to cool in case of a failure within the temperature sensing circuit. If this happens, the TEMP SET LED flashes and refrigerator switches to BOS mode. This mode provides cooling until the refrigerator is serviced. Check refrigerator temperatures when operating in this mode. If the temperature is too cold, adjust the thermostat to the left in single LED steps. If the temperature is too warm, adjust the thermostat to the right in single LED steps. Allow the refrigerator to operate at the new setting for one hour before rechecking the temperatures (frequent door opening prevents the temperatures from stabilizing). While the refrigerator can operate in this mode, Norcold recommends that you seek service as soon as practical to restore normal operation.

Diagnostics

When :	IT Means:	You Need to Check:
No LED"s light	Control voltage is unavailable to display panel	10.5 to 15.4 VDC supplied to refrigerator. Battery charging equipment or converter. DC connection to the refrigerator. Refrigerator's DC fuse (3 Amp - Control Fuse) See your dealer or a Norcold Service Center
Flashing LP GAS LED (flash, pause, flash, pause etc.)	LP gas ignition fault (Initial start-up)	10.5 to 15.4 VDC supplied to refrigerator. Have gas lines been purged? LP tank valve on? LP tanks empty? LP supply pressure 11" water column. Refrigerator's manual shut-off valve open. See your dealer or a Norcold Service Center
Flashing AC LED (flash, pause, flash, pause, etc.)	Fault external to refrigerator controls AC Mode selected but AC power not available	Is refrigerator plugged into a functional AC outlet? Has the vehicle fuse or circuit breaker blown? Vehicle generator functioning (if applicable). Refrigerator's AC fuse (5 amp) blown? See your dealer or a Norcold Service Center
Flashing AC LED (flash, flash, pause, flash, flash, pause, etc.)	Fault external to refrigerator controls AC input voltage too low or too high	AC input to refrigerator (108 VAC to 132 VAC) If AC problem cannot be located, see your dealer, camp-ground administrator, or a Norcold Service Center
Flashing BATTERY LED (flash, flash, pause, flash, flash, pause, etc.)	Fault external to refrigerator controls DC input voltage too high or too low	Battery(s) Voltage Battery charging equipment or converter DC connection to the refrigerator See your dealer or a Norcold Service Center
Flashing BATTERY LED (flash, flash, flash, pause, flash, flash, flash, pause, etc.)	Fault within refrigerator controls	**Not owner serviceable**; See your dealer or a Norcold Service Center
Current TEMP SET LED flashing (flash, pause, flash, pause, etc.)	Fault within refrigerator controls Back-Up Operating System Mode	**Not owner serviceable**; Temporary operating mode; read Back-Up Operating System. Seek service as soon as practical. See your dealer or a Norcold Service Center

All LED's Flashing (flash, pause, flash, pause, etc.)	Fault within refrigerator controls	**Not owner serviceable;** See your dealer or a Norcold Service Center

Maintenance Requirements

Important Notice:

Read and understand this notice before removing this refrigerator, re-installing this refrigerator, or performing any maintenance on this refrigerator. Norcold <u>will not</u> accept responsibility for installation, adjustment, alteration, service, or maintenance performed by anyone other than a qualified dealer or Norcold service center. Costs or related consequential problems resulting from improper installation, adjustments, alteration, service, or maintenance are the refrigerator owner's responsibility.

1. Leak test gas supply piping and fittings at least once a year. This procedure should only be performed by your dealer or a Norcold service center. These facilities are familiar with gas refrigerators and propane gas systems.
2. Check the main line gas pressure and adjust if necessary. The correct gas pressure is 11 inches water column. It is recommended that your dealer or a Norcold service center perform this task.
3. Clean the refrigerator's burner and burner orifice. This procedure is required once a year minimum and should only be performed by your dealer or a Norcold service center.
4. Insure that the LP gas supply is Propane, not another fuel such as Butane or Butane mixtures. Question the facility in which you purchase your gas.
5. Check the burner flame appearance during gas operation. Inspect burner electrode assembly to insure it is secure to burner bracket.

7. Inspect the flue of refrigerator's cooling system. This area must be free of foreign materials. Foreign materials observed in the flue indicate the burner requires cleaning.
8. Insure the area directly behind the refrigerator is not being used for storage. Keep the refrigerator area clear and free from combustible materials, gasoline, and other flammable vapors and liquids.
9. Periodically inspect the ventilation system. The air passage from the bottom intake vent to refrigerator coils and from the refrigerator coils through the upper exhaust vent must be unobstructed.
10. Inspect combustion seals (visual check without removing the refrigerator). Combustion seals are attached to the back surfaces of the refrigerator's mounting flanges and must be continuous between the wall and the mounting flanges.
11. Periodically inspect door seals.

Refrigerator Storage

When the refrigerator will not be in use for an extended (seasonal) period of time, it is recommended that all power to the refrigerator be disconnected. Unplug the refrigerator's AC power cord from the wall receptacle and disconnect the 12 volt DC supply wires from the refrigerator's power board located at the rear of the refrigerator. Clean the refrigerator interior and latch the doors in the storage position. After the extended shut-down period, the burner, burner orifice, and flue must be inspected before igniting the burner flame. These areas must be free from dust, spider webs, or other obstructions which might restrict the combustion system.

Refrigerator Removal and Replacement

To remove the refrigerator, disconnect both AC and DC power sources from the refrigerator. Turn off the propane gas at the main supply tank. Turn the refrigerator's manual shut-off valve. Disconnect the gas supply piping at the manual shut-off valve. Remove the mounting screws securing the refrigerator to the enclosure. Remove refrigerator from the enclosure.

Before reinstalling the refrigerator, inspect the areas behind the mounting flanges for damaged or missing seal strips. These seal strips serve as a combustion seal which isolates the living space of the vehicle from refrigerator's combustion system. Reinstall the refrigerator by reversing the above procedures. After reinstalling the refrigerator, check the gas fitting connections for leaks. **Do not check for leaks with an open flame. Use an approved leak-detection solution**.

Burner Flame Inspection

The efficiency of your refrigerator while operating in the gas mode is dependent upon the correct burner flame. The burner flame provides energy to the refrigerator's cooling system.

The burner flame efficiency is a function of correct input gas supply pressure, air input, and burner and burner orifice cleanliness.

A visual check of the burner flame should be made regularly. The flame should be sharp blue with a stable burning appearance (Figure 11). If there is a constant yellow component observed or if the flame appears erratic or unstable, switch the refrigerator to electric or turn the refrigerator "OFF" and contact a qualified installer, service agency, or gas supplier.

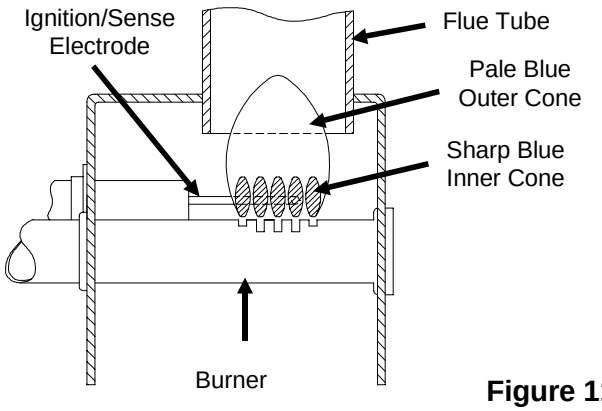

Figure 11

Procedure for Cleaning the Cooling System Flue

<u>WARNING</u> *Carbon Monoxide can be hazardous to your health. Gas appliances may emit excessive Carbon Monoxide if the refrigerator's burner, burner orifice, and the flue tube are not regularly cleaned. To prevent Carbon Monoxide, the burner, burner orifice, and the cooling system's flue tube must be cleaned at least once a year and after <u>all</u> prolonged (seasonal) shut-down periods. Refer to the following cleaning procedures, or contact a qualified installer, your dealer or a Norcold service center.*

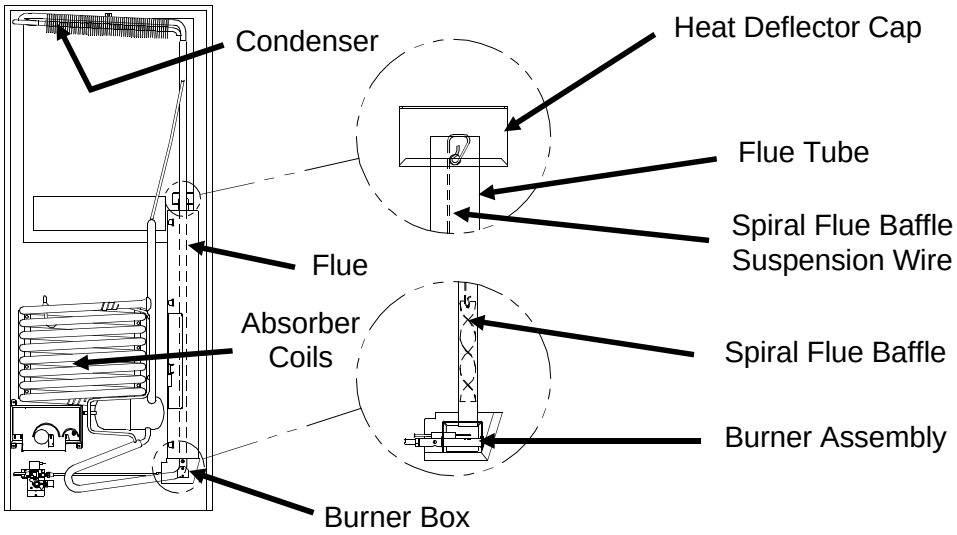

Figure 12

1. Remove the refrigerator from its enclosure. Follow "Refrigerator Removal and Replacement" procedure beginning on page 11.
2. Remove the heat deflector cap from the flue.
3. Remove the spiral flue baffle from the flue tube.
4. Using a stiff brush or fine emery cloth, clean the spiral flue baffle of debris.
5. Clean the inside of the flue tube with a flue brush. ***Inspect burner after cleaning***.
6. Re-install the spiral flue baffle. ***Insure the spiral flue baffle is securely in place. The spiral flue baffle is required for efficient cooling while operating in the gas mode.***

Burner Orifice Removal and Cleaning

Caution: Do not clean the orifice with a pin, drill or similar object.

1. Turn off the gas at the main tank.
2. Turn the refrigerator off.
3. Remove the screws securing the burner cover and burner box to the refrigerator.
4. Loosen the flare nut and remove the burner tube from the orifice. ***To prevent damage to the gas line, use two wrenches when loosening the flare nut.***
5. Carefully remove the gas tube from the burner.
6. Remove the orifice and clean with alcohol and air pressure.
7. Remove the screw securing the burner to the burner bracket. Remove the burner.

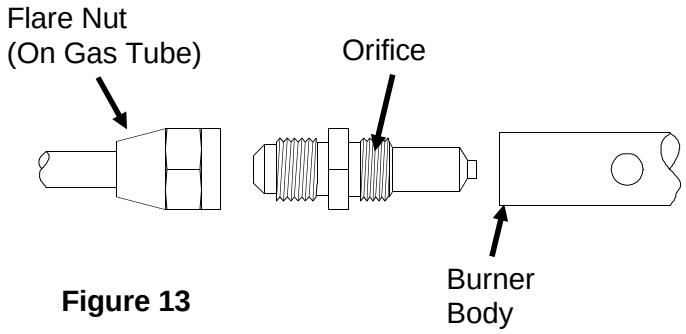

Figure 13

8. Use air pressure to remove dust, spider webs, etc., from inside the burner. Clean the ports of the burner with a brush.
9. Clean and inspect the ignition/sense electrode. Replace if corroded, cracked, or broken.
10. Using air pressure, clean any debris from burner bracket of cooling system.
11. Thread orifice into the burner until finger tight. Tighten 1/4 turn with wrench. Thread flare nut to orifice. Do not cross-thread connections. To prevent damage, use two wrenches when tightening.
12. Leak test all fittings using a soapy water solution. ***Do not use a solution which contains ammonia. Ammonia will attack brass fittings of the burner and gas valve assemblies. Do not leak test fittings with an open flame***.

Fuse Replacement Procedure

The refrigerator's electrical circuits are fused to protect them from a circuit overload. If the "Diagnostic Codes and Their Meaning" section indicates that the refrigerator fuse is blown, follow the replacement procedures below.

1. Turn the refrigerator to "OFF".
2. Disconnect the AC power cord from the wall receptacle.
3. Disconnect the AC power cord from the power board cover at the rear of the refrigerator from the power board cover.
4. Disconnect the 12 volt DC supply wires from the power board cover (A).
5. Remove the ignition wire/sense wire from the power board cover.

***CAUTION** . Failure to follow this procedure can lead to personal injury or property damage.*

6. Remove the three screws which secure the power board cover to the refrigerator, pull cover away. ***Do not operate refrigerator without power board cover.***
7. For 3-Way models, disconnect the supply wires from the extention board (B) as shown in Figure 8.

   Note! Remember how the wires were removed. Reattach wires to the same location as they were when removed.

   1. Blue wire from power board connects to terminal #7 of extention board.

   2. Red wire from power board connects to terminal #9 of extention board.

   3. Black wire connected to refrigerator chassis connects to terminal #8 of extention board.

   4. Yellow wire of the DC heater connects to terminal #6 of the extention board.

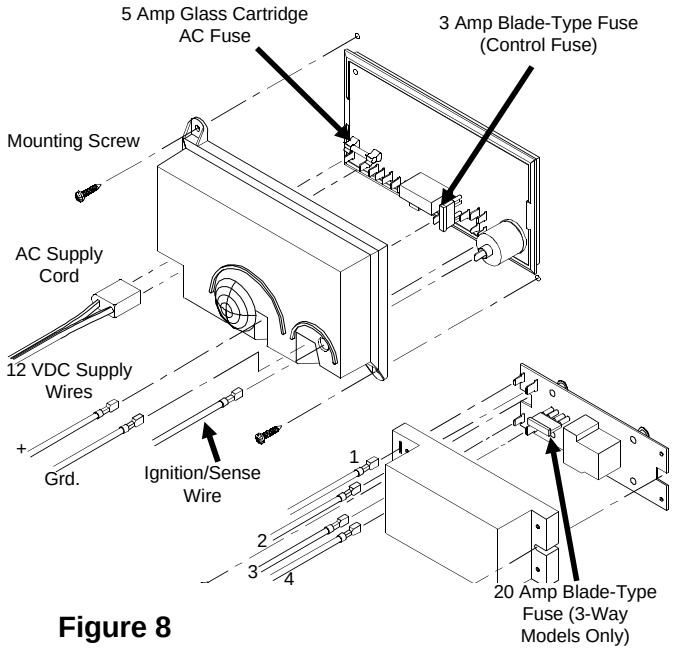

Figure 8

8. Remove the two screws which secures the extention board cover (B) to the refrigerator. Pull cover away from the refrigerator. Do not operate refrigerator without cover.
9.. Replace blown fuse with the specified fuse listed in the WARNING above.

***WARNING** A circuit overload can result in an electrical fire when incorrectly sized fuses are used. To prevent a possible electrical fire, follow the fuse specifications given below:*

DC Control Circuit - 3 amp (purple) blade-type automotive
DC Heater Circuit - 20 amp (yellow) blade-type automotive
AC Circuit - 5 amp glass cartridge

10. If a fuse continues to blow, contact your dealer or a Norcold Service Center for corrective action.

No Refrigeration

Failure of refrigeration does not necessarily mean the cooling system is defective. Check other factors governing its operation.

If a diagnostic indicator appears, see *Diagnostics*.

If the refrigerator is operating on gas and a loss of cooling is noticed, switch the refrigerator to AC mode of operation (see *Start-Up Instructions*).

If the refrigerator has been operating on electric, switch to gas operation.

After the refrigerator has been switched from one power source to the other allow several hours to assure the refrigerator is cycling properly. This will determine if a component failure in the electric or gas controls is causing the cooling fault. If no cooling is evident after eight hours (or overnight), the cause of failure may be the cooling unit. To determine the actual cause for failure, contact your dealer or a Norcold service center

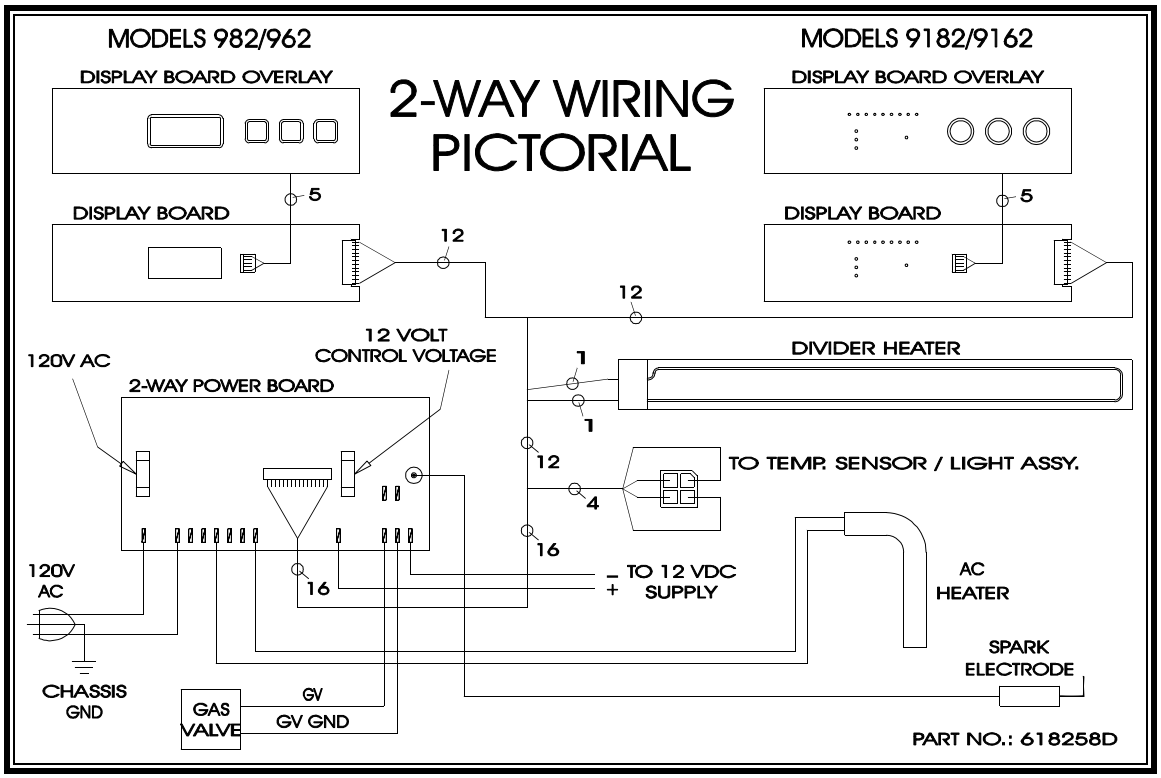
MODELS 982/962
MODELS 9182/9162
2-WAY WIRING PICTORIAL
DISPLAY BOARD OVERLAY
DISPLAY BOARD
DISPLAY BOARD OVERLAY
DISPLAY BOARD
5
12
12
120V AC
12 VOLT CONTROL VOLTAGE
2-WAY POWER BOARD
DIVIDER HEATER
1
1
12
4
16
TO TEMP. SENSOR / LIGHT ASSY.
120V AC
16
– TO 12 VDC
+ SUPPLY
AC HEATER
SPARK ELECTRODE
CHASSIS GND
GAS VALVE
GV
GV GND
PART NO.: 618258D

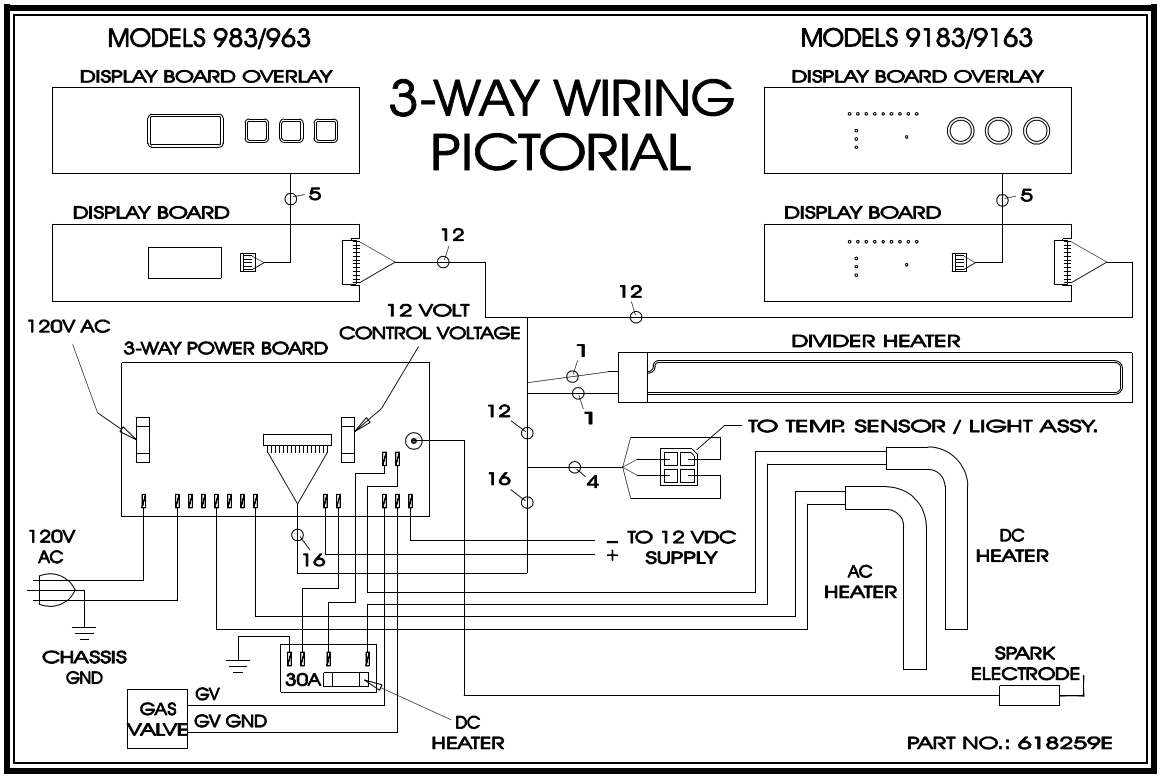
MODELS 983/963
MODELS 9183/9163
3-WAY WIRING PICTORIAL
DISPLAY BOARD OVERLAY
DISPLAY BOARD
DISPLAY BOARD OVERLAY
DISPLAY BOARD
5
12
12
120V AC
12 VOLT CONTROL VOLTAGE
3-WAY POWER BOARD
DIVIDER HEATER
1
1
12
4
16
TO TEMP. SENSOR / LIGHT ASSY.
120V AC
16
– TO 12 VDC
+ SUPPLY
DC HEATER
AC HEATER
SPARK ELECTRODE
CHASSIS GND
30A
GAS VALVE
GV
GV GND
DC HEATER
PART NO.: 618259E

LIMITED TWO YEAR WARRANTY

This Limited Warranty is given by NORCOLD (Company) to the original consumer-purchaser of any new refrigerating equipment (Equipment) supplied by the Company, excluding glassware, electric light bulbs, replaceable fuses, and will be effective for a period of two years from date of original purchase. The Company warrants, provided that the Equipment shall at all times have been in possession of and used by the original consumer-purchaser, that:

A. The Company will provide free service and replacement of defective parts at no charge at all authorized Norcold Service Centers for a period of two years from the date of original purchase. This Limited Warranty covers labor costs incurred in removing and re-installing the refrigerator only when necessary to replace a defective part. The Company will pay normal inbound and outbound transportation costs of any defective part, for a two-year period commencing with date of purchase. The original consumer-purchaser must pay all expenses incurred in making the equipment available at one of the Norcold Service Centers. Any parts replaced under warranty (including cooling units) will be warranted for the duration of the original warranty period.

B. The following procedure shall be followed by an original consumer-purchaser desiring to obtain performance under the terms of this Limited Warranty. The refrigerator must be brought to any of the Norcold Service Centers and the original consumer-purchaser must present evidence (1) to identify the original consumer-purchaser: and (2) that the item claimed to be defective is still within the warranty coverage. If the original consumer-purchaser is unable to accomplish this task, written notice should be immediately directed to Norcold and advice will be promptly given concerning the manner in which warranty service may be obtained. Inability to physically bring the refrigerator to a Norcold Service Center will not void the warranty, but any additional costs thereby incurred are solely for the account of the original consumer-purchaser.

C. The Company will not be liable under this Limited Warranty for any of the following:

(1) Travel expenses for warranty coverage.

(2) Defects which arise by reason of transit damage, misuse, neglect, or accident.

(3) Manufacturing defects found at the time of purchase, parts replaced under warranty, and associated labor, which are not communicated to the Company within 30 days by the original consumer-purchaser.

(4) Labor performed without need for parts replacements which is not communicated to the Company within 30 days by the original consumer-purchaser.

(5) Defects in glassware, electric light bulbs, or replacement of fuses.

(6) Defects arising from improper installation, maintenance, or adjustment of the Equipment.

(7) The need for normal maintenance of this refrigerator according to the guidelines specified in the Operator's and Installation Guides.

(8) Defects arising from the improper use of parts or parts not manufactured or supplied by the Company in the course of repairs or replacements to the Equipment.

D. Employees and agents of the Company, and its authorized service representatives, have no authority to vary the terms of the Limited Warranty, which applies only to Equipment purchased and installed in the United States of America and the Dominion of Canada. The Company reserves the right to make any improvements or changes in parts or models without notice to any original consumer-purchaser.

E. The Company shall not be liable or in any way responsible for any loss or damage to person or property, or lost profits or other similar loss or damage that may result or be claimed to have resulted from a defect in any parts of the Equipment covered by this Limited Warranty. Some states do not allow the exclusion or limitations of any incidental or consequential damages, so the above limitation or exclusion may not apply to you.

F. Any implied warranty of merchantability or fitness for a particular purpose:

(1) Applicable to a part or parts of the refrigerator is limited to a period of two years from date of purchase.

(2) Some states do not allow limitations on how long an implied warranty lasts. The above limitations may not apply.

G. This Warranty gives you specific legal rights. You may also have other rights which vary from state to state.