ASKO

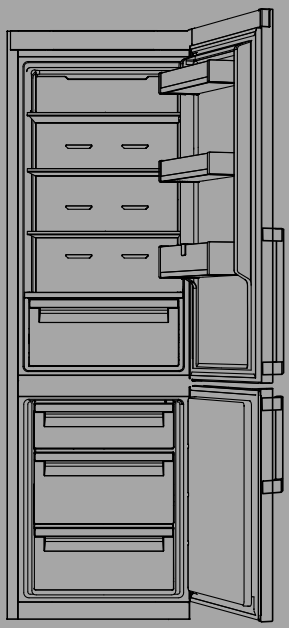

INSTRUCTIONS FOR USE

REFRIGERATOR WITH FREEZER

EN

RFC186KNCW1
RFC186KNCS1
RFC286KNBW1
RFC286KNBS1
RFC2864KNBW1
RFC2864KNBS1

Contents

Introduction 3
Welcome to our growing ASKO family! 3
Important notes and precautions 4
Before using the appliance for the first time 4
Important safety instructions 4
Important information on the use of appliance 6
Installation and connection 8
Selecting the room 8
Appliance placement 8
Connecting the appliance 11
Before using the appliance for the first time 12
Before you use the appliance for the first time 12
Energy-saving advice 12
Reversing the door opening direction 13
Description of the appliance 18
Drawers 19
Door compartments 19
Glass shelves 20
MultiBox 20
Operating the appliance 21
Control panel 21
Switching the appliance on/off 22
Adjusting the temperature in the appliance 22
Intensive cooling (refrigerator compartment) 23
Intensive freezing (freezer compartment) 24
Eco function 25
Holiday mode (prolonged absence) 26
Party mode 27
Sabbath function (Sabbath mode) 27
Wi-Fi function 28
High temperature alarm 28
Open door alarm 29
Power outage/power supply failure alarm 29
Storing and freezing food 30
Recommended distribution 30
Avoid contamination of food 30
Storing fresh food in the refrigerator 30
Freezing and storing foods in the freezer 31
Thawing frozen food 33
Maintenance 34
Defrosting the appliance 34
Cleaning the appliance 34
Faults 35
Faults table 35
Environmental aspects 38
Disposal of packaging and appliance 38
Compliance information 39
Spare parts 40

Welcome to our growing ASKO family!

We are proud of our appliances. We hope that this appliance will be an appreciated and dependable aid for many years to come.

Please read the operating instructions before use. They include general tips, information about the settings and adjustments you can make, and the best way to take care of your appliance.

⚠ WARNING!

Read the safety instructions before using the appliance!

Read these instructions thoroughly before you first use the appliance, and keep the instructions for future use.

Link to the EU EPREL database

Information about your product can be found at www.asko.com/energylabel, where you will also find a link to the European Product Database for Energy Labelling, EPREL. Or else visit https://eprel.ec.europa.eu directly. Follow the instructions to search by model name (see the information on the serial number plate).

The following symbols are used throughout the manual and they have the following meanings:

INFORMATION!

Information, advice, tip, or recommendation

⚠ WARNING!

Warning – general danger

DANGER OF FIRE!

Warning; risk of fire / flammable materials

Before using the appliance for the first time

Before connecting the appliance to the power mains, please read carefully the instructions for use which describe the appliance and its correct and safe use. The instructions apply to several appliance types/models; thus, settings or equipment may be described herein which is not available in your appliance. We recommend saving this instruction manual for future reference and attach it to the appliance if it is sold in the future.

Check for any damage or irregularities on your appliance. If you find your appliance is damaged, notify the retailer from which you have purchased the appliance.

Allow the appliance to stand upright for at least 4 hours before you connect the appliance to the mains. This reduces the risk of malfunctions resulting from transport effects on the refrigerant unit.

Important safety instructions

⚠ DANGER OF FIRE!

WARNING! Risk of fire/flammable materials.

The appliance must be connected to the power mains and grounded in compliance with the effective standards and regulations.

WARNING! Do not locate multiple portable socket-outlets or portable power supplies at the rear of the appliance.

Before cleaning the appliance, unplug it from the power mains (unplug the power cord from the wall outlet).

⚠ ELECTRIC SHOCK!

WARNING! If the supply cord is damaged, it must be replaced by the manufacturer, its service agent or similarly qualified persons in order to avoid a hazard.

⚠ ELECTRIC SHOCK!

WARNING! When positioning the appliance, ensure the supply cord is not trapped or damaged.

⚠ ELECTRIC SHOCK!

If LED lighting does not work, call a service technician. Do not attempt a repair of the LED lighting yourself, as there is danger of contact with high voltage!

⚠ WARNING!

WARNING! Do not use electrical appliances inside the food storage compartments of the appliance, unless they are of the type recommended by the manufacturer.

⚠ WARNING!

WARNING! Do not use mechanical devices or other means to accelerate the defrosting process, other than those recommended by the manufacturer.

⚠ WARNING!

WARNING! To avoid any hazard resulting from poor stability of the appliance, make sure it is installed as instructed.

Freeze burn hazard

To avoid freeze burn, never put frozen food in your mouth and do not touch frozen food.

Safety of children and vulnerable persons

The appliance is not intended for use by persons (including children) with reduced physical, sensory or mental capabilities, or lack of experience and knowledge, unless they have been given supervision or instruction concerning use of the appliance by a person responsible for their safety.

Children should be supervised to ensure that they do not play with the appliance.

Cleaning and user maintenance shall not be made by children without supervision.

Remove the packaging intended to protect the appliance or particular parts during transport and keep it outside the reach of children. It presents danger of injury or suffocation.

When removing a used appliance, disconnect the power cord, remove the door, and leave the shelves in the appliance. This will prevent children from locking themselves in the appliance.

For European markets only

This appliance can be used by children aged from 8 years and above and persons with reduced physical, sensory or mental capabilities or lack of experience and knowledge if they have been given supervision or instruction concerning use of the appliance in a safe way and understand the hazards involved.

Children shall not play with the appliance.

Cleaning and user maintenance shall not be made by children without supervision.

Children aged from 3 to 8 years are allowed to load and unload refrigerating appliances.

Warning regarding the refrigerant

The appliance contains a small amount of an environmentally friendly yet flammable gas R600a. Make sure that no parts of the cooling system are damaged. A gas leak is not hazardous to the environment, but it could cause eye injury or fire.

In case of a gas leak, ventilate the room thoroughly, disconnect the appliance from the power mains, and call a service technician.

Important information on the use of appliance

WARNING! This appliance is intended to be used in household and similar applications such as:

- staff kitchen areas in shops, offices and other working environments;
- farm houses and by clients in hotels, motels and other residential type environments;
- bed and breakfast type environments;

- catering and similar non-retail applications.

⚠ WARNING!

WARNING! Keep ventilation openings, in the appliance enclosure or in the built-in structure, clear of obstruction.

The appliance may not be used outdoors and it may not be exposed to rain.

Do not store explosive substances such as aerosol cans with a flammable propellant in this appliance.

If the appliance will be out of use for an extended period of time, switch it off using the relevant button, and unplug it from the power mains. Empty the appliance, defrost it, clean it, and leave the door ajar.

In case of an error or power supply failure, do not open the freezer compartment unless the freezer has not operated for over 16 hours. After this period, use the frozen food or provide sufficient cooling (e.g. a replacement appliance).

Technical information on the appliance

Rating plate can be found in the appliance interior. It indicates data on voltage, gross and net volume, type and amount of refrigerant, and information on the climate classes.

If the language on the rating plate is not the language of your choice or the language of your country, replace it with the one supplied.

⚠ WARNING!

WARNING! Do not damage the refrigerant circuit.

Selecting the room

- Install the appliance in a dry and well ventilated room. The appliance will operate correctly if the environment temperature is in the interval specified in the table. The appliance class is indicated on the rating plate / label with the basic information on the appliance.

Description	Class	Ambient temperature range °C	Relative humidity
Extended temperate	SN	+10 to +32	≤75%
Temperate	N	+16 to +32	
Subtropical	ST	+16 to +38	
Tropical	T	+16 to +43	

INFORMATION!

This appliance is not intended to be used as a build-in appliance.

INFORMATION!

Do not place an appliance in a room where temperature can drop to below 5 °C as this may cause abnormal appliance operation or failure!

- After the installation, the appliance mains plug should be accessible!
- Do not place the appliance near appliances or devices radiating heat, such as a cooker, a stove, a radiator, water heater etc., and do not expose it to direct sunlight. The appliance should stand at least 3 cm away from an electric or gas cooker or at least 30 cm away from an oil or solid fuel stove. If the distance between such source of heat and the appliance is smaller, use an insulating panel.

Note: Place the appliance in a sufficiently large room. There should be at least 1 m^3 of space per 8 grams of refrigerant. Amount of refrigerant is indicated on the rating plate in the appliance interior.

Appliance placement

Appliance installation should be carried out by at least two persons to avoid any personal injury or damage to the appliance.

- The appliance must stand level or tilted slightly to the back. It should be stable and placed a solid base. At the front, the appliance is fitted with two adjustable feet that can be used to level the appliance. At the rear side, casters allow for easier installation of the appliance (only with some models).
- Do not expose the appliance to direct sunlight and do not place it near sources of heat. If this cannot be avoided, install an insulation panel.

- The appliance is intended for free-standing installation. To achieve optimum power consumption, always provide 50 mm of clearance between the wall and the back of the appliance and above the appliance. Also ensure sufficient air circulation next to and above the appliance.
- The appliance can also be placed adjacent to or between furniture cabinets, or adjacent to a wall. In case of such placement, the appliance will operate flawlessly, however, noise and power consumption may increase.
- Take into account the space or clearance required to open the appliance door, in order to allow the drawers and shelves to be pulled out or removed (see installation diagram).

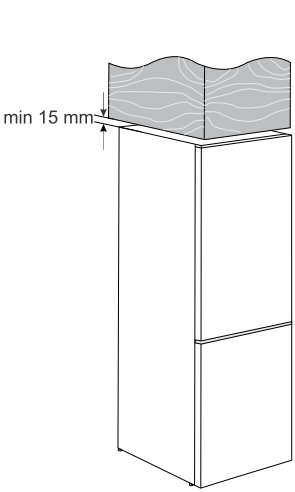

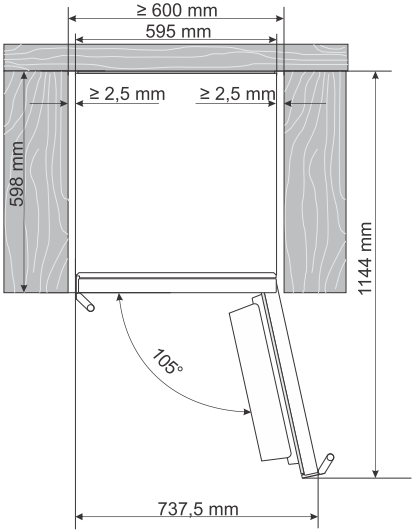

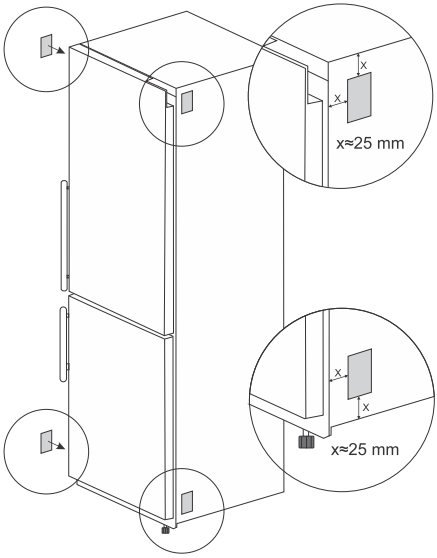

The appliance can be installed in a cabinet with an internal width of at least 600 mm.

Before placing the appliance in the cabinet, it must be fitted with spacers that allow the door to be opened correctly. Spacers are included in the bag with instructions. Remove the protective film from them and stick them on each side of the appliance, as shown in the figure.

Once the spacers are fitted, slide the appliance into the cabinet. Be careful not to damage the power cord.

When the appliance is installed in the cabinet, align it with the help of adjustable feet.

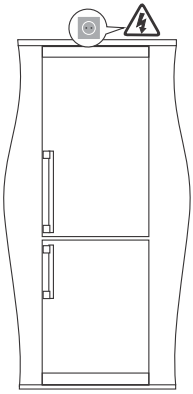

- For a complete installation, the route of the power cord must also be implemented so that it does not interfere with operation and is not a nuisance.

Once the appliance is aligned, install the bottom cover.

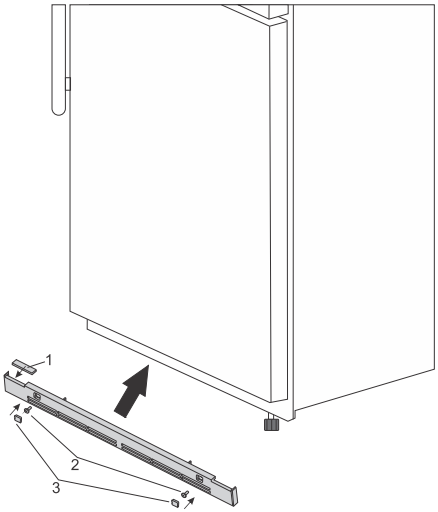

First, place the insert (1) on the bottom cover, on the side where there is no door hinge. Then place the bottom cover on the appliance and tighten it with the two screws (2). When the cover is properly installed, place the cover caps (3) in the screw holes, with the groove facing the centre of the appliance.

To reverse the direction of door opening, the bottom cover must be removed in reverse order. Carefully remove the cover caps using a 4 mm wide flat-blade screwdriver. Insert the screwdriver tip into the groove on the cap and remove it carefully. Then unscrew the two screws (2) and remove the bottom cover from the appliance. Move the insert (1) to the opposite side and reinstall the cover on the appliance following the same procedure.

Installation of the anti-tip bracket

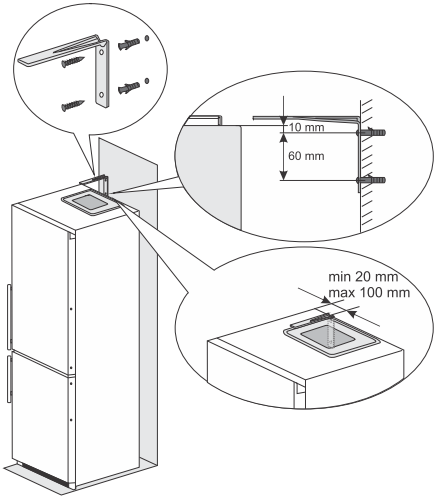

As the appliance can tilt forwards when opened with the door fully loaded, it must be secured with an anti-tip bracket (for cabinet-mounted or freestanding installation).

Drill two Ø 6 mm holes in the wall behind the appliance, at a distance of between 20 mm and 100 mm from either side of the appliance.

The first hole should be 10 mm below the upper edge of the appliance and the second one 60 mm lower.

Insert the wall inserts into the holes and fix the bracket with the screws provided, as shown in the figure.

Then push the appliance against the wall so that the bracket extends above its upper edge.

INFORMATION!

The supplied bracket fixing material is designed for fixing in concrete and brick walls. For fixing in other types of walls, use other suitable fixing material or consult a specialist.

Connecting the appliance

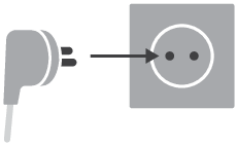

- Connect the appliance to the power mains using the power cord. The wall outlet should be fitted with a ground contact (safety socket). Nominal voltage and frequency are indicated on the rating plate/label with basic information on the appliance.
- The appliance must be connected to the power mains and grounded in compliance with the effective standards and regulations. The appliance will withstand short-term deviations from the nominal voltage, but not more than +/- 6%.

Before you use the appliance for the first time

Do not connect the appliance to the mains until you have carefully read the instructions for the correct and safe use of the appliance. As these instructions are for various types and models, it is possible that the instructions for use refer to settings or parts that are not available on your appliance. We recommend that you keep these instructions for future use. If you sell the appliance, enclose them with the appliance.

Inspect the appliance for damage and/or irregularities. If the appliance is damaged, contact the store that sold you the appliance.

Allow the appliance to stand upright for at least 4 hours before you connect the appliance to the mains. This reduces the risk of malfunctions resulting from transport effects on the refrigerant unit.

Before using the appliance for the first time, the interior and all internal accessories should be cleaned with lukewarm water and a neutral cleaning agent. Wipe the cleaned parts with a cloth with clean water and then dry them thoroughly.

If you use the appliance for the first time, do not put food into the appliance until the temperature has decreased to the set temperature.

Energy-saving advice

- Install the appliance as stated in the instructions for use.
- Do not open the door more than necessary.
- Never cover or obstruct the ventilation openings.
- Replace a door seal that is damaged or no longer seals properly as quickly as possible.
- Store food in well-sealed containers or suitable packaging.
- Allow food to cool to room temperature before you put it in the appliance.
- Defrost food in the refrigerator compartment.
- Space the shelves evenly in the refrigerator compartment. Place the food so that the air can circulate freely in the appliance (follow the recommendations for the location of foods enclosed in the instructions).
- The lower the set temperature, the higher the power consumption.

The direction in which the appliance door opens can be reversed.

Note: Disconnect the appliance from the power mains before reversing the door opening direction.

Tools required:	
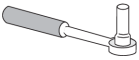	Socket wrench No. 8,
	Cross-point screwdriver
	Flat screwdriver
	Spanner No. 8
	Torx T25

Note:

- If the appliance has to be tilted to allow access to parts on the bottom, ask another person for assistance or gently place the appliance on some soft padding to prevent damaging it. To reverse the opening direction, proceed as follows.

1. 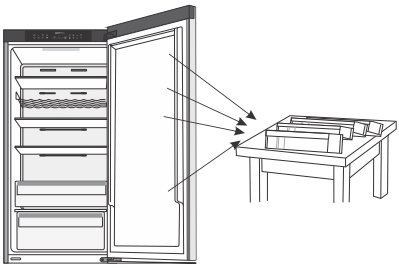

Place the appliance in an upright position. Open the top door and remove the door racks (to prevent damaging them during the procedure).

2. 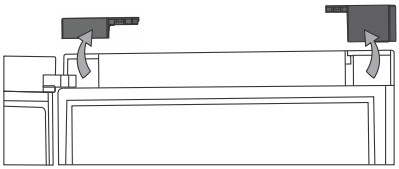

Remove the covers on each side of the upper door.

3. 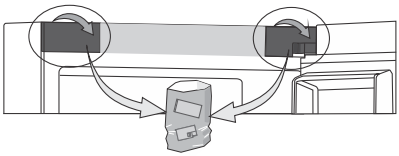

Then remove the covers on each side of the control unit. To do this, hold it up and pull it hard towards you. Put the covers away for future reference.

Reversing the door opening direction

4. 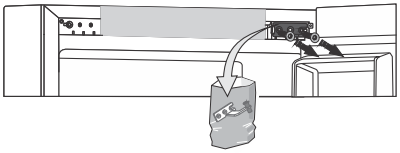

Then unscrew the top hinge and also put it away for future reference.

5. 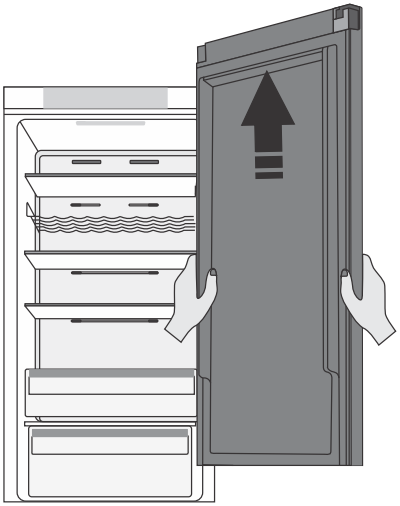

Remove the top door from the middle hinge by carefully lifting it straight up. Lay the door onto a smooth surface.

6. 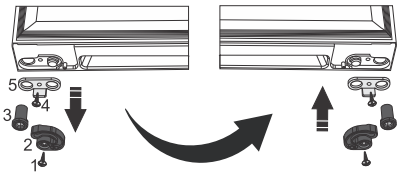

Changing the soft closing mechanism: unscrew the screw (1), remove the door latch (2) and the hinge bushing (3). Then unscrew the screw (4) and remove the door limiter (5). Then install all these components in reverse order on the opposite side of the door.

7. 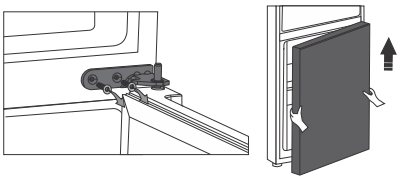

Undo the screws from the middle hinge and remove it. Then, remove the bottom door from the bottom hinge.

8.

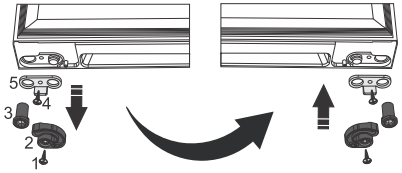

Repeat the process of changing the soft closing mechanism on the lower door, too. Unscrew the screw (1), remove the door latch (2) and the hinge bushing (3). Then unscrew the screw (4) and remove the door limiter (5). Then install all these components in reverse order on the opposite side of the door.

9.

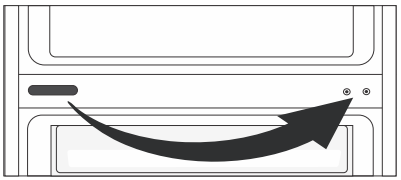

Remove the middle hinge cap and replace it on the opposite side.

10. Unscrew the foot (1) and the two screws (2) with which the lower hinge (3) is attached and remove it. Rotate the hinge (3) by 180° and screw it onto the opposite side. Finally, reattach the foot (1).

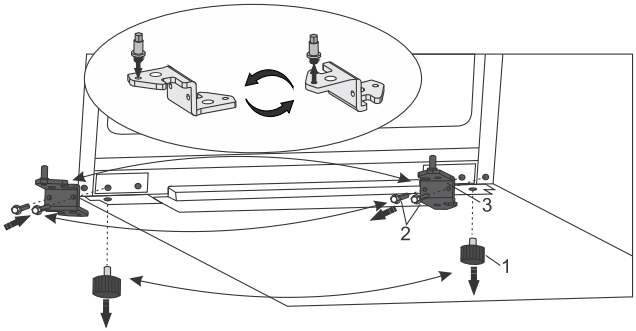

11.

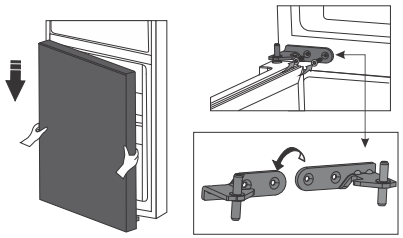

Place the bottom door onto the bottom hinge and hold them in place. Rotate the middle hinge by 180°. Place the washer in the correct position and adjust the position of the middle hinge so that you can install and fix the bottom door.

Reversing the door opening direction

12.

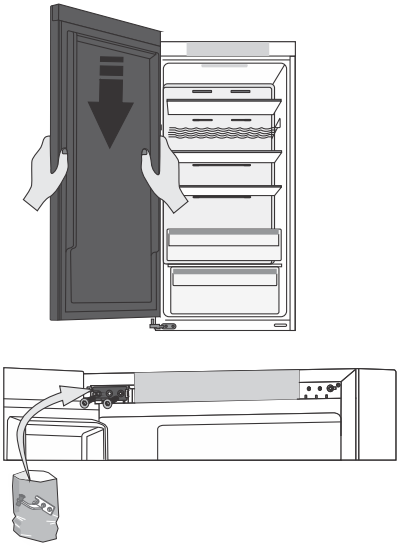

Place the top door in the correct position and use the screws to attach the upper hinge, which you can find in the bag with documentation. Hold the top door in place while positioning them.

13.

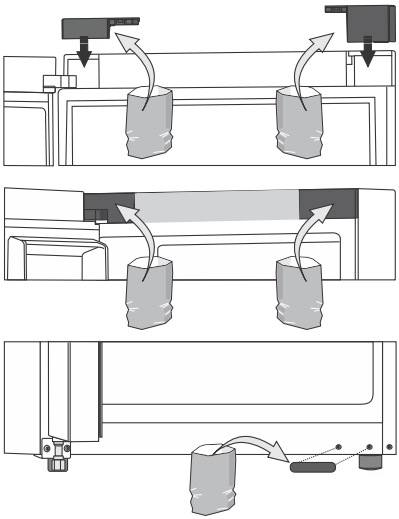

Install the upper door covers first, then the covers on each side of the cover strip and lastly the cover of the lower hinge holes, which you can find in the bag with documentation.

14. Open the top door and replace the door rack; then, close the door.

Note: If your model has a handle, then move it to the opposite side by following the instructions below.

Remove the caps (1) and undo the two screws (2) as shown in the figure. Rotate the handle (3) by 180° and replace it on the opposite side. Then, fasten the screws (2) and replace the caps (1).

Model with easy-open door handle

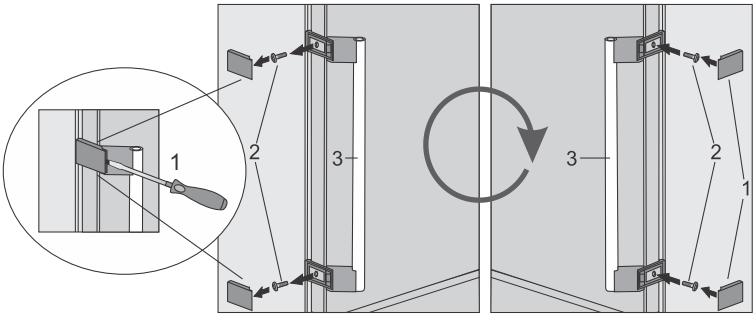

Model with fixed door handle

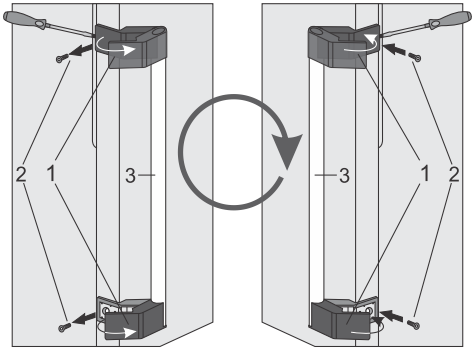

This product contains a light source of energy efficiency class G.

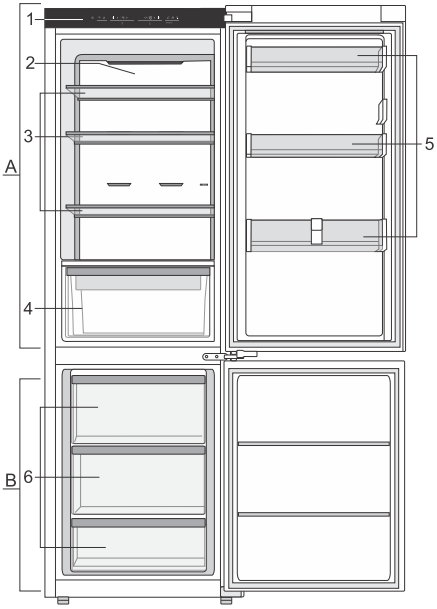

A Refrigerator

1. Control panel
2. Air distribution system
3. Glass shelves
4. Drawer Nordic fresh
5. Door compartments

B Freezer

6. Freezer drawers

Air distribution system

The advanced ventilation system evenly distributes the air and equalises the temperature throughout the entire cooling section. It also ensures optimal air circulation and the best conditions for storing your food.

Total NoFrost

The modern Total NoFrost technology in the freezer compartment prevents the formation of ice and the accumulation of frost on foods, thus enabling economical operation, greater transparency and full use of space.

In the refrigerator compartment, it prevents food from drying out, as it maintains its humidity and freshness.

Drawers

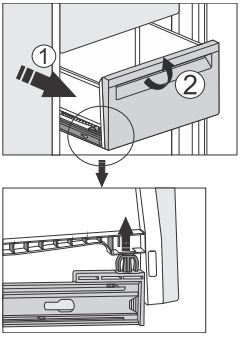

Many drawers are mounted on telescopic movable guides.

To pull the drawer out of the guides, pull it out completely. Lift the drawer at the front to remove it from the latch and then pull it out completely.

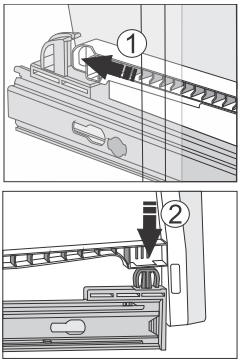

To insert the drawer into the guides, pull both guides out fully. Align the drawer with the guides and push it into the groove on the back of the guide. Then slide the drawer down at the front to latch it onto the telescopic guide.

Door compartments

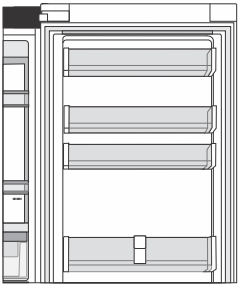

The height of the door compartments is adjustable. Lift the compartment out of the groove and fit it in the required position. Each compartment can carry a maximum weight of 5 kg.

The lower door compartment is suitable for bottles and has a slider attached with which you can fix the bottles so that they cannot move uncontrollably.

Glass shelves

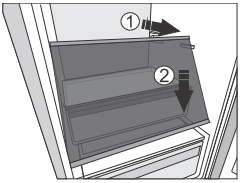

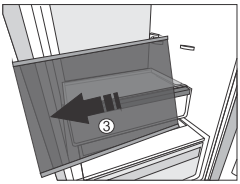

Empty shelves can be rearranged as you see fit across the guides in the appliance interior. To move or remove them from the appliance, slightly lift them at the back, pull them towards you, push them down at the front and then move or pull them out of the appliance. Store quickly perishable food at the back of the shelf where the temperature is the lowest.

MultiBox

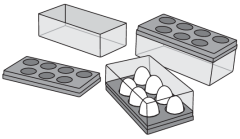

The MultiBox offers a handy option for storing foods with a strong odour, such as ripe or blue cheese, smoked sausages and onions, etc.

If the tray is used as an egg tray, place it directly on the bottom of a door shelf.

If the tray is used as an ice tray, fill it with water and place it in the freezer in a horizontal position.

Control panel

INFORMATION!

- For best results, touch the keys with as much of the fingertip as possible.

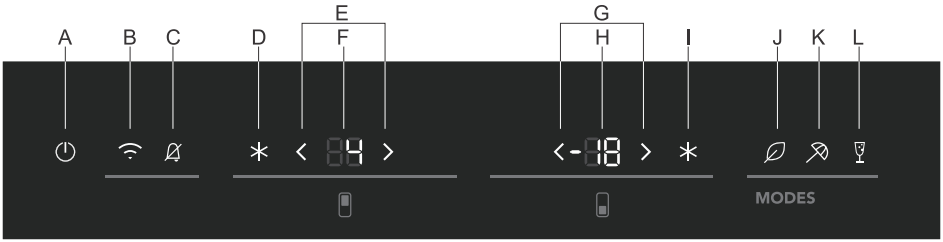

A. Appliance on/off key

B. WiFi function on/off key

C. Acoustic alarm off key

Refrigerator

D. SuperCool key (intensive cooling function)

E. Temperature adjustment keys (refrigerator compartment)

F. Display of the set temperature (refrigerator compartment)

Freezer

G. Temperature adjustment keys (freezer compartment)

H. Display of the set temperature (freezer compartment)

I. FastFreeze key (intensive freezing function)

Special functions

J. Eco function on/off key

K. Long absence on/off key (Holiday mode)

L. Party mode on/off key (Party Mode)

Switching the appliance on/off

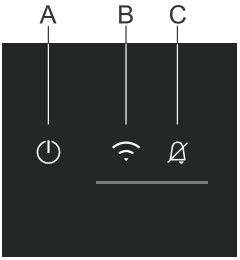

When you connect the appliance to the power mains for the first time, the appliance will be in standby mode (switched off, but powered).

Switching on the appliance: switch on the appliance by pressing **A**.

Switching off the appliance: switch off the appliance by pressing the **A** key and holding it (for 3 seconds). The appliance will switch to standby mode (it remains powered).

Adjusting the temperature in the appliance

INFORMATION!

- Appliance temperature is preset at the factory to the recommended setting, i.e. 4°C for the refrigerator compartment and -18°C for the freezer compartment.
- After the appliance is switched on, it may take several hours until the set temperature is reached. Do not place any food into the appliance before the temperature drops to the selected setting.

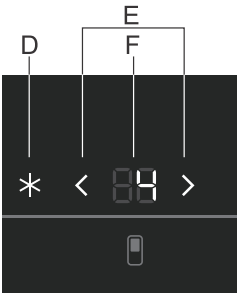

Temperature in the **refrigerator compartment** can be set with the keys **E**.

Increase temperature

Decrease temperature

- Refrigerator compartment temperature can be set in the range from +3°C to 9°C.
- Each time you press one of the keys **E** you increase or decrease the setting by 1 °C. After three seconds of inactivity, the setting is automatically saved as the last set temperature of the refrigerator compartment.
- Recommended temperature setting is 4°C.

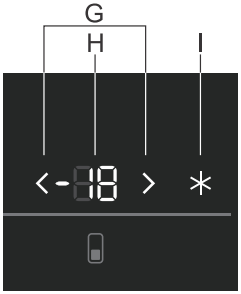

Temperature in the **freezer compartment** can be set with the keys **G**.

Increase temperature

Decrease temperature

- Freezer compartment temperature can be set in the range from -15°C to -26°C.
- Each time you press one of the keys **G** you increase or decrease the setting by 1 °C. After three seconds of inactivity, the setting is automatically saved as the last set temperature of the freezer compartment.
- Recommended temperature setting is -18°C.

Intensive cooling (refrigerator compartment)

This appliance has a fast cooling function. This function decreases the temperature in the refrigerator compartment as quickly as possible. This is ideal for cooling foods that have just been put into the refrigerator. Use this function when you put a large quantity of food in the appliance.

INFORMATION!

When the intensive cooling function is selected, the appliance works at maximum capacity. It may then make more noise for a while.

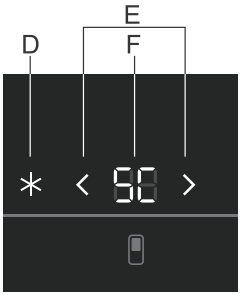

- Press and hold **D**.
  - The display shows »**SC**«, to indicate that the SuperCool function is activated.
- To deactivate the function, press and hold **D**.
  - The set temperature is once again shown in the displays.

WARNING!

If the setting is not deactivated manually, it will be deactivated automatically (after approximately 8. hours). The setting returns to the last saved state.

The function will also be deactivated if you activate any of the special functions.

⚠ WARNING!

Changing the temperature of the refrigerator compartment while the intensive cooling function is activated is not possible.

⚠ WARNING!

Should a power failure occur while the function is activated then the function will be activated again when the power is restored.

Intensive freezing (freezer compartment)

This appliance has an intensive freezing function. This function decreases the temperature in the freezer compartment as quickly as possible. Activate this function 24 hours before you put a large quantity of fresh food in the appliance.

⚠ WARNING!

When the intensive freezing function is selected, the appliance works at maximum capacity. It may then make more noise for a while.

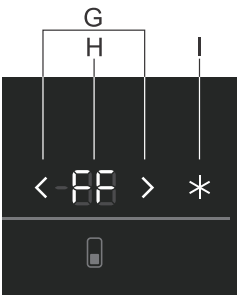

- Press and hold **I**.
  - The display shows »**FF**«, to indicate that the FastFreeze function is activated.
- To deactivate the function, press and hold **I**.
  - The display once again shows the set temperature.

⚠ WARNING!

If the setting is not deactivated manually, it will be deactivated automatically (after about 52. hours). The setting returns to the last saved state.

The function will also be deactivated if you activate any of the special functions.

⚠ WARNING!

Changing the temperature of the freezer compartment while the intensive freezing function is activated is not possible.

⚠ WARNING!

When the intensive freezing function is not manually disabled then the function will be automatically disabled after about two days. The temperature then returns to the latest set temperature.

⚠ WARNING!

Should a power failure occur while the function is activated then the function will be activated again when the power is restored.

Eco function

This appliance has an ECO function. When the ECO function is selected, the appliance works with the optimum settings. These settings are shown in the display (4 °C/–18 °C). The ECO function has no time limit and remains activated until the function is disabled.

⚠ WARNING!

If the SuperCool or FastFreeze function, or any special function, is activated, you will not be able to activate the Eco function.

Activating/disabling the ECO function

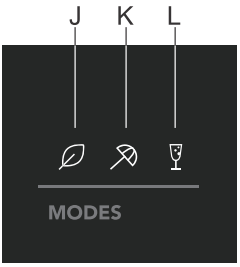

- Press and hold **J**.
  - The lighting of the touch key comes on: the function is activated.
- To deactivate the function, press and hold **J**.
  - The function is disabled.

⚠ WARNING!

The function will also be deactivated when you change the refrigerator or freezer compartment temperature setting, activate the SuperCool, FastFreeze, or any of the other special functions.

⚠ WARNING!

Should a power failure occur while the ECO function is activated then the function will be activated again when the power is restored.

Holiday mode (prolonged absence)

Use this function when you are away for a long period of time, for example when you are going on holiday or taking a long business trip.

⚠ WARNING!

If the SuperCool or FastFreeze function, or the special Party mode function, is activated, you will not be able to activate the Holiday mode.

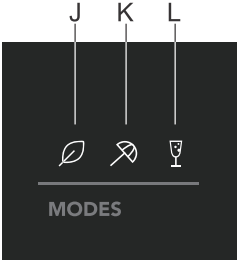

- Press and hold **K**.
  - The lighting of the touch key comes on: the function is activated.
  - When this function is activated, the refrigerator compartment temperature will be set to 15°C.

⚠ WARNING!

Before activating this function, empty the refrigerator compartment, as any perishables left in this compartment may spoil.

- To deactivate the function, press and hold **K**.
  - The function is disabled.

Party mode

In Party mode, set all compartments to maximum cooling and freezing. Use this function when you want to cool/freeze large amounts of food and drink during the day.

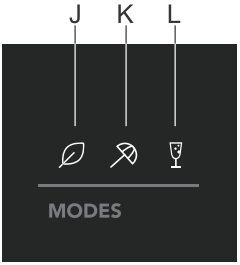

- Press and hold **L**.
  - The lighting of the touch key comes on: the function is activated.
  - The displays **F** and **H** show **SC** and **FF**.
- To deactivate the function, press and hold **L**.
  - The function is disabled.

⚠ WARNING!

The function will also be deactivated when you change the refrigerator or freezer compartment temperature setting, or activate any of the other special functions.

⚠ WARNING!

When the Party mode is not manually disabled, the function will be automatically disabled after about 24 hours. The temperature then returns to the latest temperature setting.

Sabbath function (Sabbath mode)

Sabbath mode is active for 72 hours after activation. All illuminated features and the display will be temporarily disabled. In the meantime, the appliance's cooling system is working normally.

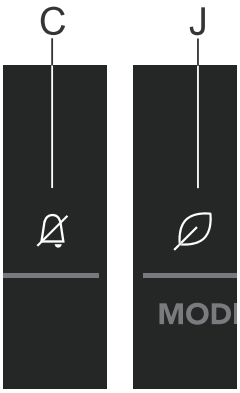

- Press and hold **C** and **J**.
  - The touch keys will light up: the function is activated.
- To deactivate the function, press and hold **C** and **J**.
  - The function is disabled.

⚠ WARNING!

If any error occurs during Sabbath mode, it won't be showed until Sabbath mode is deactivated.

Wi-Fi function

You can control this device remotely with your smartphone. If the device is not connected to your home network, it functions in the same way as a conventional device.

Connecting your appliance to the application ConnectLife

ConnectLife it is a smart home platform that connects people, devices, and services. The **ConnectLife** application includes advanced digital services and carefree solutions that allow users to monitor and control appliances, receive notifications from a smartphone, and update software (supported features vary depending on your appliance and your region/country).

To connect your smart device, you need a home Wi-Fi network (only 2.4 GHz networks are supported) and a smartphone with the application **ConnectLife**.

To download the **ConnectLife** application, scan the QR code or search for **ConnectLife** in your favorite app store.

1. Install the **ConnectLife** application and create an account.
2. In the **ConnectLife** application, go to the "Add device" menu and select the appropriate type of device. Then scan the QR code (it can be found on the rating plate of the appliance; you can also enter the AUID/SN code manually).
3. The application then guides you through the entire process of connecting the appliance to your smartphone.
4. After a successful connection, the appliance can be operated remotely via the mobile application.

Do you have more questions? Visit us at **www.connectlife.io** or contact us at **hello@connectlife.io**.

Cancelling all pairings

By activating this function, the appliance will be removed from all paired app user accounts.

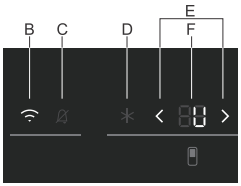

- Press and hold **B** for 9 seconds until the display **F** shows **U**.
- The function will terminate automatically after successful removal of all pairings in the cloud.

High temperature alarm

A signal will sound when the temperature in the appliance is too high. The display **C** and **HI** the display of the compartment where the temperature is too high start to flash.

High temperature can be caused by several reasons:

- The door of the relevant compartment may have been opened for too long or too frequently.
- The door does not seal properly.

- Too much fresh food has been put in at the same time.

⚠ WARNING!

Every time you switch on the appliance, a 24-hour delay in alarm operation is activated. If the appliance fails to reach a sufficiently low temperature after this period, the alarm will be activated.

Stopping the alarm

1. Press **C**.
   - The acoustic alarm will go off. The current measured temperature of the compartment begins to flash on the display unit.
   - The next time you press **C** the set temperature of the compartment starts to flash and will continue to flash as long as the high temperature alarm is active.
   - When the appliance reaches an adequate temperature, the temperature display will stop flashing, and the display **C** will go out.

Open door alarm

An alarm signal sounds when a compartment door is open for too long. The following key lights up **C**.

Stopping the alarm

1. Close the door.
   - The alarm will stop sounding.

⚠ WARNING!

If you turn off the alarm only by pressing **C**, the alarm will switch on again after some time because the door is still open.

Power outage/power supply failure alarm

If the temperature in the appliance reaches the alarm level during a power failure, then the high temperature alarm will be activated once power supply is restored. The acoustic alarm sounds and the display shows **PF**.

Stopping the alarm

1. Press **C**.
   - The acoustic alarm will go off. The current measured temperature of the compartment begins to flash on the display unit.
   - The next time you press **C**, you cancel the alarm after power failure.

If the high temperature alarm is activated at the same time, it will operate as described in the chapter High temperature alarm, after you have deactivated the power supply failure alarm.

Recommended distribution

Sections of the refrigeration compartment

INFORMATION!

Store food that spoils rapidly at the back of a shelf or at the back of the drawer at the lowest temperature.

WARNING!

Do not store fruit (bananas, pineapples, papaya, citrus fruits) and vegetables (courgettes, tomatoes, aubergines, cucumber, sweet peppers and potatoes) that are sensitive to low temperatures in the refrigerator.

Sections of the door

- Top/middle door compartment: eggs, butter, cheese and sauces, etc.
- Bottom door compartment: drinks, cans and bottles, etc.

Sections of the freezer compartment

- Top section: leftovers, ice, pizza.
- Middle section: meat, fish, bread.
- Bottom section: standard freezer, vegetables and fruit.

WARNING!

Do not store lettuce, eggs, apples, pears, grapes, peaches, yoghurt, buttermilk, sour cream or mayonnaise in the freezer.

Avoid contamination of food

To avoid contamination of food, please respect the following instructions:

- Opening the door for long periods can cause a significant increase of the temperature in the compartments of the appliance.
- Regularly clean surfaces that can come in contact with food and accessible drainage systems.
- Store raw meat and fish in suitable containers in the refrigerator, so that it is not in contact with or drip onto other food.
- If the refrigerating appliance is left empty for long periods, switch off, defrost, clean, dry, and leave the door open to prevent mould developing within the appliance.

Storing fresh food in the refrigerator

Important recommendations for storing fresh food

- To ensure the quality of fresh food, it is important that:
  - the food is well-packaged;
  - the appliance is at the correct temperature;

- the appliance is clean.

- Take good note of the use-by date stated on the food packaging.
- Put food in the refrigerator in sealed containers or in suitable packaging. This will prevent the food from picking up or spreading odours and will keep it dry.
- Do not store flammable, unstable or explosive materials in the refrigerator.
- Store bottles that have been opened upright and close them tightly.
- Some organic solutions, such as essential oils, in the skin of lemons and oranges, and butyric acid, that come into long-term contact with plastics can eat into the material and cause premature ageing.
- A disagreeable odour is an indication that the appliance is not clean or that it contains food that has spoiled (see the chapter 'Maintenance').
- Take perishable foods out of the refrigerator when you will be away from home for a longer time.

Freezing and storing foods in the freezer

Important recommendations for freezing fresh food

- The maximum quantity of food that you can put in the freezer in one go is stated on the type plate. Putting more than this maximum quantity of food into the freezer will slow the freezing process and reduce the quality. Moreover, this will also harm the quality of frozen food already stored in the freezer.
- Use only good-quality fresh food that is suitable for freezing.
- Allow hot food to cool to room temperature.
- Food needs to be frozen quickly. It is recommended that you use small packs.
- Use air and watertight packaging to prevent the food from drying out and lose its vitamins.
- Note the type and quantity of the food on the packaging, together with the date on which it was frozen.
- Do not allow fresh food to come into contact with frozen food.
- You can remove all the drawers to make use of the total volume of the freezer compartment.
- Put the food directly on a shelf and on the base of the freezer.

Freezing small quantities of fresh food/making ice cubes

See the chapter 'Recommended distribution' for the best location for freezing fresh food (1 to 2 kilograms) and making ice cubes.

Freezing large quantities of fresh food

- Activate the intensive freezing function 24 hours before you plan to freeze the food.
- Distribute the fresh food equally between all the drawers in the freezer compartment.
- After 24 hours, you can transfer the food to another compartment in the freezer and then freeze a new batch of food.

Important recommendations for storing frozen food

- Follow the manufacturer's instructions for the storage and use of frozen food. Take note of the recommended storage temperature and use-by date stated on the packaging.
- Use only food in undamaged packaging that has been stored at a temperature of -18 °C or lower.

- Do not buy food covered in frost. This indicates that the food has thawed or partially thawed several times and, as a result, is of inferior quality.
- Make sure that the food does not thaw during transport. An increase in its temperature will shorten the storage life and harm the quality of the food.

Recommended storage times of frozen food in the freezer ✳***

Type of food	Storage life
Fruit, beef	10 to 12 months
Vegetables, veal, poultry	8 to 10 months
Venison	6 to 8 months
Pork	4 to 6 months
Finely chopped or minced meat	4 months
Bread, pastas, cooked dishes, whitefish	3 months
Offal	2 months
Smoked sausage, bluefish	1 month

Thawing frozen food

- Thawing is an important step in storing food preserved by freezing. Food must be thawed in the correct way.
- Suitable methods of thawing food are:
  - in the refrigerator;
  - in cold water;
  - in a microwave or conventional oven with a suitable thaw program.
- Some frozen products can be prepared without needing to thaw them first. The manufacturer will state this on the packaging.
- The food needs to be packed in small portions. In this way the food thaws faster.
- Use partially or completely thawed food as quickly as possible. The bacteria in thawed food are reactivated and the food will spoil rapidly. This applies in particular to fruit, vegetables and ready-made food.
- Do not refreeze partially or completely thawed food.

Defrosting the appliance

The modern Total NoFrost technology in the freezer compartment prevents the formation of ice and the accumulation of frost on foods, thus enabling economical operation, greater transparency and full use of space.

In the refrigerator compartment, it prevents food from drying out, as it maintains its humidity and freshness.

Defrosting of the refrigerator and freezer compartment is automatic, eliminating the need for time-consuming manual defrosting and cleaning.

Cleaning the appliance

⚠ WARNING!

Switch off the appliance and remove the plug from the socket before you start cleaning it.

⚠ WARNING!

Do not use abrasive cleaning agents, as they can damage the surface.

INFORMATION!

Activate the intensive freezing function 24 hours before you plan to clean the freezer.

- Regularly clean the interior of the appliance with lukewarm water. If so required, add a neutral cleaning agent or special refrigerator cleaner to the water. Clean all surfaces with a soft cloth. Wipe the cleaned parts with a cloth with clean water and then dry them thoroughly.
- Do not put parts of the appliance in a dishwasher: this could damage them.
- Clean wooden parts with a damp cloth. Make sure that the wood does not become too wet and allow the parts to dry thoroughly before you put them back into the refrigerator.
- Warning: Wood is a natural material. This means that it will be difficult to remove some stains (especially red wine and oil).
- Wooden accessories that have dried out will need to be treated with a wood oil. This product must be suitable for treating surfaces that come into direct contact with food.

⚠ WARNING!

When you are not going to use the appliance for a longer period then switch it off with the appropriate key and disconnect it from the mains. Empty, defrost and clean the appliance, and leave the door ajar.

Faults table

When you have any doubts about whether your appliance is working properly you should not immediately assume that it is defective. We recommend that you should in any case check the points in the following table.

Problem	Cause/Solution
Appliance is connected to the power mains but it does not work.	• Make sure there is voltage in the power outlet and that the appliance is switched on.
Appliance cools continuously for a long time.	The compressor is operating for a longer time at low capacity (low energy consumption / high efficiency). This is the most efficient form of operation. The following factors can also influence the appliance's operation: • The ambient temperature is too high. • The door has been opened for too long or too frequently. • The door is not properly closed. • The door does not seal properly (the seal is dirty, the door is misaligned or the seal is damaged, etc.). • Too much fresh food has been put in at the same time. • Insufficient air circulation around the compressor and condenser. Check that the ventilation around the appliance is sufficient (see the separate installation instructions). • The sensor in the refrigerator is blocked by fresh food. Make sure that air can circulate freely around the sensor (not applicable to all models).
Excessive ice formation in the freezer.	• The door has been opened for too long or too frequently. • The door is not properly closed. • The door does not seal properly (the seal is dirty, the door is misaligned or the seal is damaged, etc.).
Condensation on the glass shelf above the drawers in the refrigeration compartment.	• Check that the door is closed properly and seals properly. • This is a temporary problem that cannot be avoided entirely in periods of high ambient temperatures and high humidity. The problem disappears when the temperature and humidity return to normal levels. We recommend that you clean the drawers more frequently and occasionally wipe off any drips. • Pack food in bags or other air-tight packaging.
Door does not open easily.	You are trying to open the appliance's door just after you have closed the door. Then opening the door is difficult. When you open the door, cold air escapes from the appliance and is replaced by warm air from the surroundings. As this air cools a slight vacuum is created that makes it more difficult to open the door. The situation returns to normal after a few minutes, and the door opens easily again.

Table continued from last page

Problem	Cause/Solution
Some or all of the LED lighting does not work.	• If LED lighting does not work, call a service technician. • Do not attempt a repair of the LED lighting yourself, as there is danger of contact with high voltage! • This product contains a light source of energy efficiency class G.
Appliance makes a noise.	• The appliance is cooled by a refrigeration system with a compressor (and with some models, also a fan) that makes a noise. The noise level depends on the installation of the appliance, its correct use and its age. • When you connect the appliance to the power supply the noise made by the compressor or flowing refrigerant may be slightly louder. This is not indicative of a defect, and has no effect on the service life of the appliance. The appliance will make less noise after a while. • The appliance may be temporarily noisier after the door has been opened for too long or too frequently, a large quantity of fresh food has been put in the appliance or the intensive freezing or intensive cooling function has been activated.
The display shows error code E0 or E8.	• The touch keys do not respond. Call a service centre for repair. • Until the appliance is repaired by a service technician, the appliance will operate in safe mode. The appliance will automatically preserve the most suitable temperature for each compartment.
The display shows error code E9.	The sensor of the refrigerator door is malfunctioning. Call a service centre for repair.
The display shows error code F9.	The sensor of the freezer door is malfunctioning. Call a service centre for repair.
The display shows error code F1.	The freezer compartment fan is malfunctioning. Call a service centre for repair. The appliance cannot operate normally. Transfer the food to a cool place and switch off the appliance.
The display shows error code F2.	The condenser fan is malfunctioning. Call a service centre to fix the problem. The appliance cannot operate normally. Transfer the food to a cool place and switch off the appliance.
The display shows error code F3.	The cooling compartment fan is malfunctioning. Call a service centre for repair. The appliance cannot operate normally. Transfer the food to a cool place and switch off the appliance.
The display shows error code t1.	Refrigerator compartment temperature sensor error or fault. Call a service centre for repair. Until the appliance is repaired by a service technician, the appliance will operate in safe mode. The appliance will automatically maintain the most suitable temperature for each compartment.

Table continued from last page

Problem	Cause/Solution
The display shows error code t2.	Freezer compartment temperature sensor error or fault. Call a service centre for repair. Until the appliance is repaired by a service technician, the appliance will operate in safe mode. The appliance will automatically maintain the most suitable temperature for each compartment.
The display shows error code t4.	Ambient temperature sensor is malfunctioning. Call a service center to fix the problem. The appliance will operate in safe mode until it is repaired by a service technician. The appliance will automatically maintain the most suitable temperature for each compartment.
The display shows error code t5.	Evaporator sensor of the refrigerator is malfunctioning. Call a service center to fix the problem. The appliance will operate in safe mode until it is repaired by a service technician. The appliance will automatically maintain the most suitable temperature for each compartment.
The display shows error code t6.	The evaporator sensor of the freezer compartment is defective. Call a service centre to fix the problem. The appliance will operate in safe mode until it is repaired by a service technician. The appliance will automatically maintain the most suitable temperature for each compartment.
The display shows error code 81.	The WiFi module is malfunctioning. Call a service centre to fix the problem.

If you are unable to solve the problem then contact the service centre. When you do so, state the type, model and serial number shown on the type plate or label on the inside of the appliance.

Disposal of packaging and appliance

This appliance is made from sustainable materials. This appliance must be disposed of in a responsible manner at the end of its service life. Contact the local authorities for information about the method.

INFORMATION!

See also the chapter ‘Disposal’ in the Safety instructions.

The packaging of the appliance is recyclable. The following materials may have been used:

- Cardboard.
- Polyethylene foil (PE).
- CFC-free polystyrene (hard PS foam).

These materials must be disposed of in a responsible manner and in accordance with government regulations.



The appliance is marked with a crossed out wheeled bin symbol to draw your attention to the requirement for the separate disposal of domestic electrical appliances. This means that the appliance may not be disposed of in unsorted household waste at the end of its service life. The appliance must be taken to a special municipal waste processing location for separated waste or to a dealer who provides this service.

Collecting and disposing of domestic appliances separately avoids detrimental consequences for humans and the environment. This ensures that the materials used to make the appliance can be recovered and that substantial savings in the use of energy and raw materials can be achieved.

CE

Declaration of conformity

We hereby declare that our products conform to the applicable European Directives, Regulations and requirements, as well as all requirements in the standards to which reference is made.

Radio equipment type:	MWB414C.07 MWB414S.12
Wi-Fi	
Operating frequency range:	2,412 GHz - 2,472 GHz
Maximum output power:	≤10 dBm/MHz (EIRP) (Antenna gain 10 dBi)
Maximum antenna gain:	Gain: -1,53 dBi
Bluetooth	
Frequency range:	2,402 GHz - 2,480 GHz
Carrier Output:	4 dBm (≤10 dBm)
Emission type:	F1D

Declaration of conformity

The company declares that the device with the function Connectlife complies with the essential requirements and other relevant provisions of Directive 2014/53/EU. The detailed Declaration of Conformity can be found at the web address https://auid.connectlife.io on the page of your device among the additional documents.

Spare parts

Functional spare parts for the purchased appliance will be available for at least 15 years from the date the last unit of the model was placed on the market. During this time, original spare parts will be available to ensure the correct operation of your appliance. A list of spare parts and repair tips in accordance with the current Ecodesign Directive can be found by scanning the QR code included with the appliance. Or on the following link: https://auid.connectlife.io.

Your notes

ASKO

The instructions for use can also be found on our website: www.asko.com

957246-a2

CE