Refrigerators/ Freezers

Instruction manual



Model • Modèle • Modell • Modello • Modelo • Malli:
UA001/UA002/UA003/UA004

Safety Tips

- Position on a flat, stable surface.
- A service agent/qualified technician should carry out installation and any repairs if required.
- Consult Local and National Standards to comply with the following:
  - Health and Safety at Work Legislation
  - BS EN Codes of Practice
  - Fire Precautions
  - IEE Wiring Regulations
  - Building Regulations
- DO NOT use jet/pressure washers to clean the appliance.
- DO NOT use the appliance outside.
- DO NOT use this appliance to store medical supplies.
- DO NOT use electrical appliances inside the appliance (e.g. heaters, ice cream makers etc.).
- DO NOT allow oil or fat to come into contact with the plastic components or door seal. Clean immediately if contact occurs.
- DO NOT store products on top of the appliance.
- Bottles that contain a high percentage of alcohol must be sealed and placed vertically in the refrigerator.
- Always carry, store and handle the appliance in a vertical position and move by holding the base of the appliance.
- Always switch off and disconnect the power supply to the appliance when not in use.
- Keep all packaging away from children. Dispose of the packaging in accordance to the regulations of local authorities.
- If the power cord is damaged, it must be replaced by a POLAR agent or a recommended qualified technician in order to avoid a hazard.

UA001-UA002-UA003-UA004_UK_A5_v1_20200103.indb 2 2020/1/3 18:08

- This appliance is not intended for use by persons (including children) with reduced physical, sensory or mental capabilities, or lack of experience and knowledge, unless they have been given supervision or instruction concerning the use of the appliance by a person responsible for their safety.
- Children should be supervised to ensure that they do not play with the appliance.
- Polar recommends that this appliance should be periodically tested (at least annually) by a Competent Person. Testing should include, but not be limited to: Visual Inspection, Polarity Test, Earth Continuity, Insulation Continuity and Functional Testing.

Warning: Risk of Fire / flammable materials 

- Do not store explosive substances such as aerosol cans with a flammable propellant in this appliance.



Warning: Keep all ventilation openings clear of obstruction. Unit should not be boxed in without adequate ventilation.

- **Warning:** Do not use mechanical devices or other means to accelerate the defrosting process, other than those recommended by the manufacturer.
- **Warning:** Do not damage the refrigerant circuit.
- **Warning:** Do not use electrical appliances inside the food storage compartments of the appliance, unless they are the type recommended by the manufacturer.

Product Description

UA001 - Polar single door Refrigerator
UA002 - Polar single door Freezer
UA003 - Polar double door Refrigerator
UA004 - Polar double door Freezer

UA001-UA002-UA003-UA004_UK_A5_v1_20200103.indb 3 2020/1/3 18:08

Introduction

Please take a few moments to carefully read through this manual. Correct maintenance and operation of this machine will provide the best possible performance from your POLAR product.

Pack Contents

The following is included:

- POLAR Refrigerator / Freezer
- Keys
- Shelves
- Shelf support bars
- Top hinge and Bottom hinge (for UA001/UA002 only)
- Instruction Manual

POLAR prides itself on quality and service, ensuring that at the time of packaging the contents are supplied fully functional and free of damage.

Should you find any damage as a result of transit, please contact your POLAR dealer immediately.

Installation

Note: If the appliance has been stored or moved in a non-vertical position, stand it in an upright position for approximately 12 hours before operation. If in doubt allow to stand.

1. Remove the appliance from the packaging and remove the protective film from all surfaces.
2. When positioning, maintain a distance of 20cm (7 inches) between the appliance and walls or other objects for ventilation. **NEVER LOCATE NEXT TO OR NEAR A HEAT SOURCE**.

Note: Before using the appliance for the first time, clean the shelves and interior with soapy water.

3. Set the brakes on the castors to keep the appliance in position.

Fitting the shelf support bars

- Place the support bar on the ladder at the desired height. For installation, the closed end shall be located at rear and open end at front.

1. Push the support bar backwards to let its rear end hang on the rear ladder (Step 1).
2. Lift the front end slightly then buckle it onto the front ladder (Step 2).

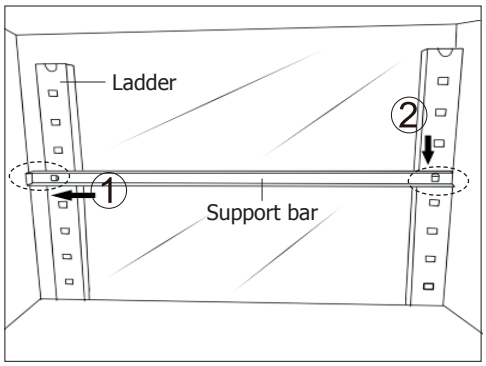

- Repeat for the remaining support bars.
- Slide the GN pans/shelves into place.

Reversing the door (for UA001/ UA002 only)

The door handle is on the left side by default. If necessary to reverse the door, follow below operations:

Caution: All the operations under this section should be carried out only by trained personnel or professional technicians.

1. Turn the fixing locks as arrowed to release the control panel.

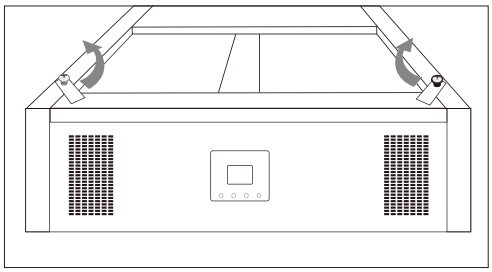

UA001-UA002-UA003-UA004_UK_A5_v1_20200103.indb 4 2020/1/3 18:08

2. Lift the controller panel upward for about 15mm, then take it out.

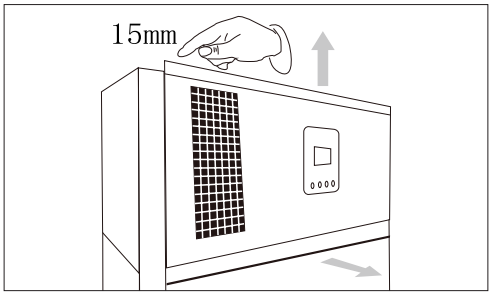

3. Remove all inner and exterior screws to release the top decoration plate.

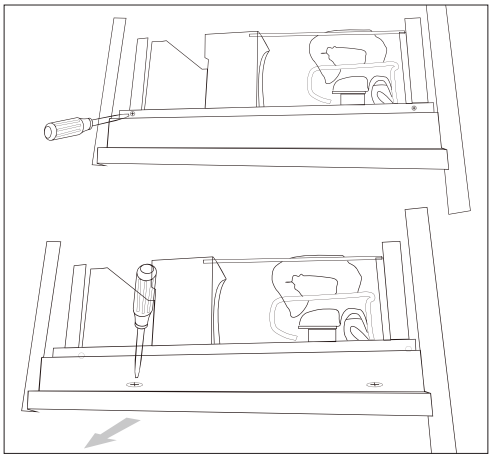

4. Remove the bottom decoration plate.

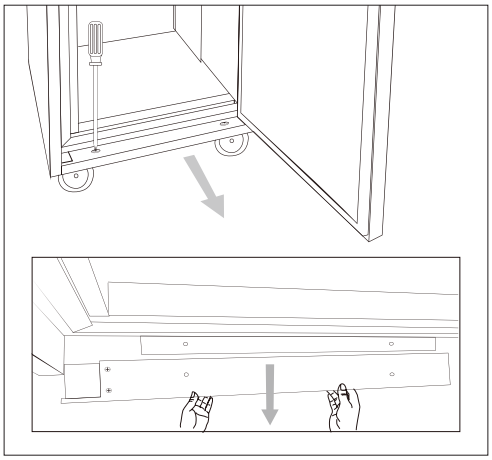

5. Remove the right top hinge and bottom hinge to release the door. Then remove the door carefully.

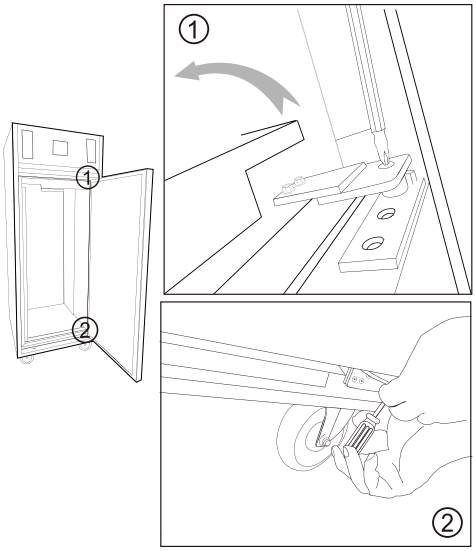

6. Mount the left top hinge and bottom hinge with screws. Keep the top hinge a little loose so that the door can be inserted later easily.

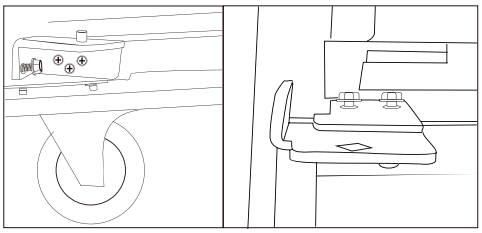

7. Reverse the door and insert it into the holes of both hinges. Then fix the door in place with screws.

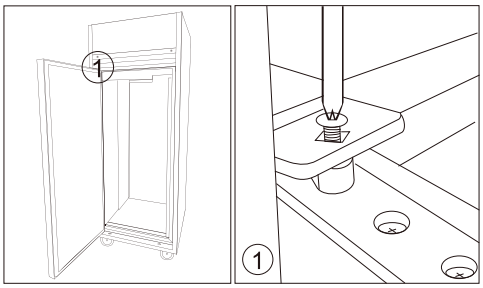

UA001-UA002-UA003-UA004_UK_A5_v1_20200103.indb 5 2020/1/3 18:08

8. There are covers on the top and bottom decoration plates, remove the left cover and install on the right side.

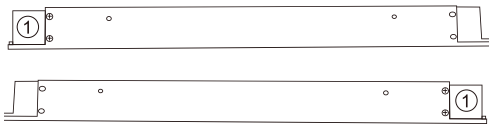

9. Install back the top decoration plate, bottom decoration plate, and controller panel with screws. Then turn the fixing locks ahead to fix the control panel in place.

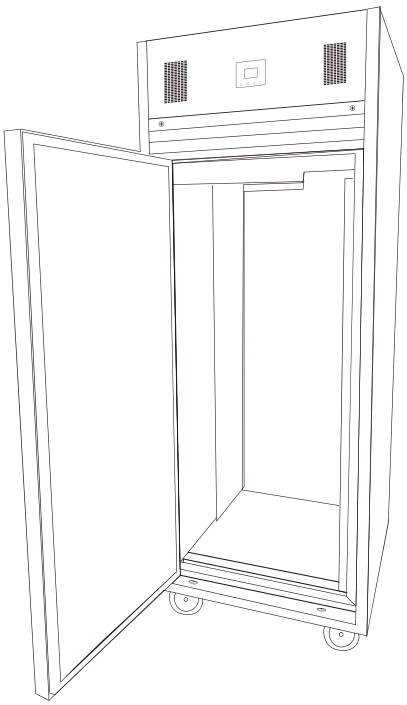

Operation

Control Panel for refrigerators (UA001/UA003)



Control Panel for Freezers (UA002/UA004)



Turn On

1. Close the door/doors of the appliance.
2. Connect the appliance to the mains power supply.
3. To switch system on or off, press and hold ⏻ for 3 seconds.

UA001-UA002-UA003-UA004_UK_A5_v1_20200103.indb 6 2020/1/3 18:08

Adjusting the Temperature

1. Press ⚙ for 3 seconds. The set temperature on the display will flash.
2. Press ▲ or ▼ to change the set temperature.
3. Wait 6 seconds for the set temperature to be stored.

Manual Defrost

Automatic defrost:
The appliance features an automatic defrost. However, should the appliance require an additional defrost period, carry out below operations:

1. Press ▼ for 3 seconds to enter defrosting mode. The symbol ❄ will appear on the display.
2. Press ▼ for 3 seconds again to exit.

Short cut operations for refrigerators only:

1. Press 🐟 once to enter fish mode and display the set temperature (Range: -1°C ~ 1°C).
2. Press 🥩 once to enter meat mode and display the set temperature (Range: -2°C ~ 2°C).
3. Press G once to return to general mode and display the set temperature (Range: 1°C ~ 4°C).

Cleaning, Care & Maintenance

Switch off and disconnect from the power supply before cleaning.

- Clean the interior of the appliance as often as possible.
- Do not use abrasive cleaning agents. These can leave harmful residues.
- Clean the door seals with warm soapy water.
- Always wipe dry after cleaning.

Cleaning the condenser

- **The condenser is part of the refrigeration system. The condenser requires monthly cleaning.**
- **Always disconnect power supply before carrying out routine maintenance.**
- **Failure to clean the condenser will reduce the performance and life of your unit and may invalidate your warranty.**

1. The condenser is located above the refrigerator cabinet at the top.
2. These models have a removable filter which can be taken out directly. Clean with a vacuum cleaner.

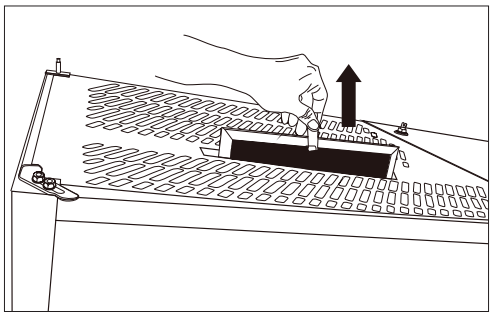

UA001-UA002-UA003-UA004_UK_A5_v1_20200103.indb 7 2020/1/3 18:08

Troubleshooting

If the machine malfunctions due to causes other than those listed or the proposed corrective actions do not solve the problem please call a Polar agent or qualified technician.

Fault	Probable Cause	Solution
The unit is not working	The unit is not switched on	Check the unit is plugged in correctly and switched on
	Plug and lead are damaged	Call POLAR agent or qualified Technician
	Fuse in the plug has blown	Replace the fuse
	Power supply	Check power supply
	Internal wiring fault	Call POLAR agent or qualified Technician
The appliance is not cooling	Coolant Leak	Call POLAR agent or qualified technician
	Fan Motor Failed	Call POLAR agent or qualified technician
	Airflow to the condenser obstructed	Increase the gap between appliance and obstacles/heat source
	Condenser is clogged	→ **Cleaning the condenser**
Loud noises	Appliance is not level	Adjust position to make it level
	Appliance is too close to a wall or other object	Move to a more suitable location
Odour from the unit	Unit is not cleaned for long time	Clean the unit thoroughly
	Odour food not properly packed	Seal and pack odour food properly

Error code/ indication	Probable Cause	Solution
"ER1" and alarm	The evaporator inlet probe is faulty	Press any button to cease alarm. Call POLAR agent or qualified Technician to replace the faulty probe
"ER2" and alarm	The evaporator return gas probe is faulty	Press any button to cease alarm. Call POLAR agent or qualified Technician to replace the faulty probe
"ER3" and alarm	The defrost probe (evaporator temperature probe) is faulty.	Press any button to cease alarm. Call POLAR agent or qualified Technician to replace the faulty probe
"ER4" and alarm	Door not closed properly or door switch is faulty	Press any button to cease alarm. Close the door/doors properly or check the door switch
"ER5" and alarm	Condenser probe is faulty	Press any button to cease alarm. Call POLAR agent or qualified Technician to replace the faulty probe
"SO" and alarm	Cabinet temperature probe is open-circuited	Press any button to cease alarm. Call POLAR agent or qualified Technician to replace the faulty probe
"SC" and alarm	Cabinet temperature probe is short-circuited	Press any button to cease alarm. Call POLAR agent or qualified Technician to replace the faulty probe
"HI" and alarm	Condenser temperature exceeding 60°C	Power off and re-start machine to cease alarm. Press power button ⏻ for 1 second to check the condenser temperature on the screen. Clean the condenser filter immediately, or Call POLAR agent or qualified technician

UA001-UA002-UA003-UA004_UK_A5_v1_20200103.indb 8 2020/1/3 18:08

Technical Specifications

Model	Voltage	Power (W)	Temp. Range	Refrigerant	Dimensions H x W x D mm	Weight (kg)
UA001	220-240V~ 50Hz	430	-2°C ~ +4°C	R290	1980 x 737 x 815	122.10
UA002	220-240V~ 50Hz	650	-18°C ~ -22°C	R290	1980 x 737 x 815	127.90
UA003	220-240V~ 50Hz	460	-2°C ~ +4°C	R290	1980 x 1400 x 815	187.60
UA004	220-240V~ 50Hz	800	-18°C ~ -22°C	R290	1980 x 1400 x 815	194.00

Electrical Wiring

POLAR appliances are supplied with a 3 pin BS1363 plug and lead.
The plug is to be connected to a suitable mains socket.
POLAR appliances are wired as follows:

- Live wire (coloured brown) to terminal marked L
- Neutral wire (coloured blue) to terminal marked N
- Earth wire (coloured green/yellow) to terminal marked E

This appliance must be earthed.



If in doubt consult a qualified electrician.

Electrical isolation points must be kept clear of any obstructions. In the event of any emergency disconnection being required they must be readily accessible.

Disposal

EU regulations require refrigeration product to be disposed of by specialist companies who remove or recycle all gasses, metal and plastic components.
Consult your local waste collection authority regarding disposal of your appliance. Local authorities are not obliged to dispose of commercial refrigeration equipment but may be able to offer advice on how to dispose of the equipment locally.
Alternatively call the POLAR helpline for details of national disposal companies within the EU.

Compliance

The WEEE logo on this product or its documentation indicates that the product must not be disposed of as household waste. To help prevent possible harm to human health and/or the environment, the product must be disposed of in an approved and environmentally safe recycling process. For further information on how to dispose of this product correctly, contact the product supplier, or the local authority responsible for waste disposal in your area.



POLAR parts have undergone strict product testing in order to comply with regulatory standards and specifications set by international, independent, and federal authorities.

POLAR products have been approved to carry the following symbol:



All rights reserved. No part of these instructions may be produced or transmitted in any form or by any means, electronic, mechanical, photocopying, recording or otherwise, without the prior written permission of POLAR.
Every effort is made to ensure all details are correct at the time of going to press, however, POLAR reserve the right to change specifications without notice.

UA001-UA002-UA003-UA004_UK_A5_v1_20200103.indb 9 2020/1/3 18:08



UK	**0845 146 2887**
NL	**0800 – 29 1 29**
	040 – 2628080
FR	**0800 - 29 2 29**
	01 60 34 28 80
DE	**0800 – 1860806**
IT	**N/A**
ES	**901-100 133**
PT	**vendas@nisbets.pt**

DECLARATION OF CONFORMITY

• Conformiteitsverklaring • Déclaration de conformité • Konformitätserklärung • Dichiarazione di conformità • • Declaración de conformidad • Declaração de conformidade

Equipment Type • Uitrustingstype • Type d'équipement • Gerätetyp • Tipo di apparecchiatura • Tipo de equipo • Tipo de equipamento	U-series Premium Single Door Refrigerator U series Premium Single Door Freezer U-series Premium Double Door Refrigerator U series Premium Double Door Freezer
Model • Modèle • Modell • Modello • Modelo • Malli	UA001 UA002 UA003 UA004
Application of Council Directives(s) Toepassing van Europese Richtlijn(en) • Application de la/des directive(s) du Conseil • Anwendbare EU-Richtlinie(n) • Applicazione delle Direttive • Aplicación de la(s) directiva(s) del consejo • Aplicação de directiva(s) do Conselho	**Machinery Directive 2006/42/EC** EN 60335-1:2012 +A11:2014 +A13:2017 EN 60335-2-89:2010 +A1:2016 EN 62233:2008 **Electro-Magnetic Compatibility (EMC) Directive 2014/30/EU** EN 55014-1:2017 EN 55014-2:2015 EN 61000-3-3:2013 EN 61000-3-2:2014 **Restriction of Hazardous Substances Directive (RoHS) 2015/863 amending Annex II to Directive 2011/65/EU**
Producer Name • Naam fabrikant • Nom du producteur • Name des Herstellers • Nome del produttore • Nombre del fabricante • Nome do fabricante	**Polar**
Producer Address • Adres fabrikant • Adresse du producteur • Anschrift des Herstellers • Indirizzo del produttore • Dirección del fabricante • Morada do fabricante	**Fourth Way, Avonmouth, Bristol, BS11 8TB United Kingdom** **42 North Point Business Park New Mallow Road Cork Ireland**

I, the undersigned, hereby declare that the equipment specified above conforms to the above Directive(s) and Standard(s).
Ik, de ondergetekende, verklaar hierbij dat de hierboven gespecificeerde uitrusting goedgekeurd is volgens de bovenstaande Richtlijn(en) en Standaard(en).
Je soussigné, confirme la conformité de l'équipement cité dans la présente à la / aux Directive(s) et Norme(s) ci-dessus
Ich, der/die Unterzeichnende, erkläre hiermit, dass das oben angegebene Gerät der/den oben angeführten Richtlinie(n) und Norm(en) entspricht.
Il sottoscritto dichiara che l'apparecchiatura di sopra specificata è conforme alle Direttive e agli Standard sopra riportati.
El abajo firmante declara por la presente que el equipo arriba especificado está en conformidad con la(s) directiva(s) y estándar(es) arriba mencionadas.
Eu, o abaixo-assinado, declaro que o equipamento anteriormente especificado está em conformidade com a(s) anterior(es) Directiva(s) e Norma(s)

Date • Data • Date • Datum • Data • Fecha • Data	**6th December 2019**
Signature • Handtekening • Signature • Unterschrift Firma • Firma • Assinatura	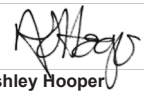
Full Name • Volledige naam • Nom et prénom • Vollständiger Name • Nome completo • Nombre completo • Nome por extenso	**Ashley Hooper**
Position • Functie • Fonction • Position • Qualifica • Posición • Função	**Technical & Quality Manager**



http://www.polar-refrigerator.com/

UA001-UA002-UA003-UA004_UK_A5_v1_20200103