TRICITY BENDIX

OPERATING AND INSTALLATION INSTRUCTIONS

FRIDGE-FREEZER

FD 792

2222 046-08

Download from Www.Somanuals.com. All Manuals Search And Download.

IMPORTANT SAFETY INFORMATION

It is most important that this instruction book should be retained with the appliance for future reference. Should the appliance be sold or transferred to another owner, or should you move house and leave the appliance, always ensure that the book is left with the appliance in order that the new owner can get to know the functioning of the appliance and the relevant safety information.

This information has been provided in the interest of safety. You MUST read it carefully before installing or using the appliance.

Installation

- This appliance is heavy. Care should be taken when moving it.
- It is dangerous to alter the specifications or attempt to modify this product in any way.
- Care must be taken to ensure that the appliance does not stand on the electrical supply cable. If the supply cord is damaged, it must be replaced by a special cable available from your local Service Force Centre.
- Any electrical work required to install this appliance should be carried out by a qualified electrician or competent person.
- Parts which heat up should not be exposed. Whenever possible, the back of the appliance should be close to a wall but leaving the required distance for ventilation as stated in the installation instructions.
- The appliance should be left for 2 hours after installation before it is turned on, in order to allow the refrigerant to settle.

Child Safety

- Do not allow children to tamper with the controls or play with the product.
- Keep all packaging well away from children.

During Use

- This appliance is designed for domestic use only, specifically for the storage of edible foodstuffs only.
- Frozen food must NOT be re-frozen once it has thawed out.
- Do not place carbonated or fizzy drinks in the freezer.
- Do not remove items from the freezer if your hands are damp/wet, as this could cause skin abrasions or frost/freezer burns.
- Ice lollies can cause ‘frost/freezer burns’ if consumed straight from the freezer.
- Manufacturers’ storage recommendations should be strictly adhered to. Refer to relevant instructions.
- The cooling plate or refrigerated freezer shelves in this appliance contain channels through which the refrigerant passes. If these are punctured this will cause substantial damage to the appliance and result in food loss. DO NOT USE SHARP INSTRUMENTS to scrape off frost or ice. Under NO circumstances should solid ice be forced off the lining or shelves. Solid ice should be allowed to thaw, when defrosting the appliance. See Defrost Instructions.

Maintenance and Cleaning

- Switch off and unplug the appliance before carrying out any cleaning or maintenance work.

Servicing

- This product should be serviced by an authorised engineer and only genuine spare parts should be used.
- Under no circumstances should you attempt to repair the machine yourself. Repairs carried out by inexperienced persons may cause injury or serious malfunctioning. Refer to your local Service Force Centre and always insist on genuine spare parts.

At the end of the Appliance Life

- When disposing of your appliance, use an authorised disposal site.
- Remove the plug and ensure that any locks or catches are removed, to prevent young children being trapped inside.

Download from Www.Somanuals.com. All Manuals Search And Download.

CONTENTS

Instructions for the user

Important Safety Information 2

Description of the appliance 4

Operation 5

Before use 5

Starting up and temperature regulation 5

The freezer compartment 5

Temperature control 5

Freezing fresh food 5

Frozen food storage 5

Thawing 6

Making ice cubes 6

Fresh food refrigeration 6

Normal operating sounds 6

Movable shelves 7

Positioning the door shelves 7

Health and Safety Guidelines 8

Maintenance and Cleaning 9

Internal cleaning 9

External cleaning 9

When the appliance is not in use 9

Changing the light bulb 9

Defrosting 9

Something not working 11

Service and Spare Parts 12

Customer Care 12

Guarantee Conditions 15

Instructions for the installer

Technical specification 16

Installation 17

Positioning 17

Rear spacers 17

Electrical Connection 18

Door Reversal 19

Download from Www.Somanuals.com. All Manuals Search And Download.

DESCRIPTION OF THE APPLIANCE

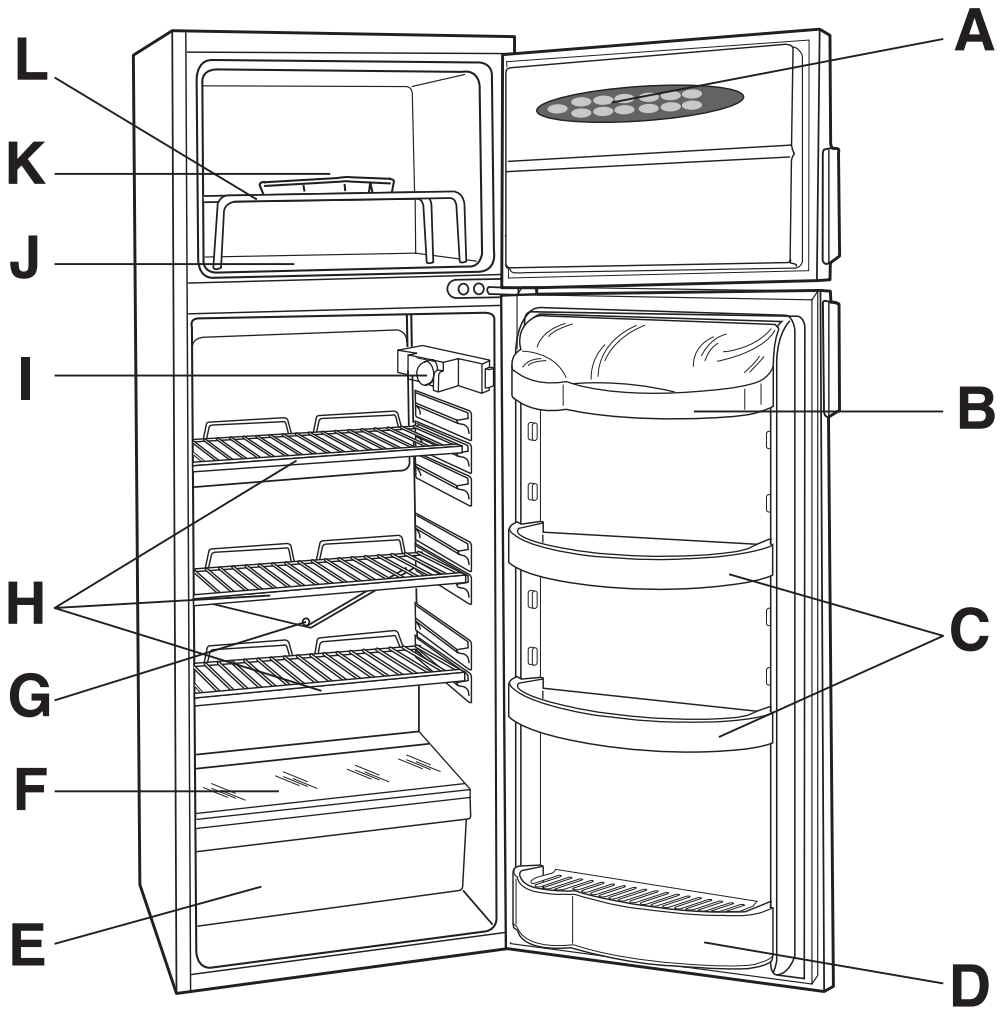

A- Freezer calender (recommended storage times for frozen foods)
B- Dairy compartment (for dairy products to prevent tainting)
C- Shelf with egg trays
D- Bottle storage shelf
E- Salad crisper (to keep fruit and vegetables fresh)
F- Glass shelf
G- Drain channel
H- Cooked foods storage shelves
I- Thermostat control for both compartments
J- Frozen food storage
K - Ice tray
L - Shelf for freezing fresh foods

Download from Www.Somanuals.com. All Manuals Search And Download.

OPERATION

Before using

Remove all securing tapes. Wash inside the appliance with lukewarm water and bicarbonate of soda (5 ml to 0.5 litre of water).

Do not use soap or detergent as the smell may linger. Dry thoroughly.

Starting-up and temperature regulation

Insert the plug into the wall socket. Open the refrigerator door and turn the thermostat knob, to be found on the upper right side of the inner liner, clockwise, from the «O» position, to start the appliance. Temperature adjustment is obtained by turning the thermostat knob to the required setting. A medium setting of between 2-4 is generally the most suitable. However, the thermostat knob setting should be adjusted depending on the temperature required inside the appliance. This, in turn, depends on a number of factors such as the ambient temperature, the number of times the door is opened, the quantity of food stored and the location of the appliance. Turn the knob clockwise, to higher numbers, to obtain a lower temperature, or anticlockwise if a higher temperature is required.

Important

If the fridge is not defrosting correctly, it is possible that because a very low temperature has been selected, the motor is working continuously, which prevents the defrost cycle from operating.

To ensure correct defrosting, a lower number should be selected on the thermostat and you should notice that the motor cuts out from time to time, which is correct.

If you wish to return to a lower temperature, turn the thermostat to a higher number, however you should turn the setting lower occasionally to allow automatic defrosting.

The freezer compartment

The four-star freezer compartment is suitable for storage of commercially frozen food and for freezing fresh foods.

Temperature control

The temperature within the freezer is controlled by the same thermostat which controls the temperature within the fridge. Normally, it is not necessary to adjust the thermostat setting when freezing fresh food.

Freezing fresh food

In any 24 hours you can freeze up to 3 kg. of fresh food.
Place food to be frozen on the shelf of the freezer as this is the coldest part.
The food to be frozen must be fresh and of the best quality.
The size of each pack should be small enough to ensure that it is used in one go. Small packs freeze quickly.
Frozen food, once thawed, must not be refrozen.
Lean food keeps better and longer than fatty food, salt reduces the storage time.
Wrap the food in polythene or aluminium freezing bags or foil so that they adhere to the food and provide an airtight seal. Stick a label on each pack showing the contents and date of freezing. This makes it easy to check storage times.
Containers with a lid must not be filled to the brim.
Do not open the door or place extra fresh food in the freezer next to food which is already frozen as this could cause the temperature of the frozen food to rise and its quality and storage life to reduce.

Important

In the event of a power cut if you do not open the door the food in the freezer will be affected if the power cut is short and if the freezer is full. Should the food begin to thaw, it must be consumed quickly and must not be re-frozen.

Warning

After having closed the freezer door, wait 1 or 2 minutes before trying to open it again. The vacuum created inside the freezer makes it difficult to re-open immediately.

Frozen food storage

If the freezer has been out of use for some time, we advise you to run your appliance for at least two hours with the thermostat control to the highest number before storing frozen food.

Storing ready-frozen foods is quite straightforward. The packs can be placed beside each other or on top of each other.

You are strongly advised to place ready-frozen food in the compartment as quickly as possible after purchase. Also ensure that the external packaging is intact. Packaging which is swollen or has traces of refrozen water droplets on the pack could indicate that the product has not been kept at a suitable temperature and that it may have lost its original quality. Partially thawed food must not be refrozen, it must be consumed within 24 hours. Never exceed the storage times indicated.

Download from Www.Somanuals.com. All Manuals Search And Download.

Do not open the freezer door too often and do not leave open longer than necessary.

Warning

Do not put carbonated liquids, (fizzy drinks etc.), in the freezer compartment.

Ices Iollies, if consumed immediately after removal from the freezer, can cause low temperature skin burns.

Do not remove items from the freezer if your hands are damp/wet, as this could cause skin abrasions or “frost/freezer burns”.

Thawing

Frozen food, prior to being used, can be thawed in the fridge or at room temperature depending on the time available. Small food items may even be cooked from frozen; in this case cooking will take longer.

Any frozen food which is allowed to thaw accidentally should either be eaten as soon as possible or thrown away. Alternatively, if the food is uncooked and has not been completely defrosted it can be cooked and then refrozen.

Meat, fish and fruit should be thawed in the refrigerator compartment and small pieces of meat can even be cooked while still frozen, but you must ensure that it is thoroughly cooked through.

Vegetables should be directly immersed in boiling water; ready-cooked dishes can be placed directly in the oven in their aluminium wrapping.

A microwave oven is particularly suitable for thawing any type of frozen or deep-frozen food: follow the oven instructions, particularly regarding the placement of aluminium wrapping or containers in the oven.

Defrosted cooked food must never be refrozen.

Making ice cubes

The appliance is provided with one or more trays for ice-cubes trays.

Fill the tray(s) 3/4 full to give the ice space to expand and place them in the freezer compartment.

To release the ice cubes simply give the tray a slight twist.

Do not use sharp or metallic instruments to remove the trays from the freezer.

Fresh food refrigeration

To obtain the best performance, do not store warm food or evaporating liquids in the refrigerator; do cover or wrap the food, particularly if it has a strong flavour.

Do not cover the shelves with any protective material, such as paper, cardboard or plastic, which may obstruct the air circulation through them.

To help you use your refrigerator correctly, here are some more useful hints:

Raw meat (beef, pork, lamb & wild fowl): wrap in polythene bags and place on top of the salad crispers.

Meat can only be stored safely in this way for one or two days at the most.

Fruit & vegetables: these should be thoroughly cleaned and placed in the bottom salad crispers.

Butter & cheese: these should be placed in special airtight containers or wrapped in aluminium foil or polythene bags to exclude as much air as possible.

Milk bottles: these should have a cap and should be stored in the bottle rack on the door.

Normal Operating Sounds

- You may hear faint gurgling or bubbling sounds when the refrigerant is pumped through the coils or tubing at the rear, to the cooling plate/evaporator or to the fixed freezer shelves.
- When the compressor is on, the refrigerant is being pumped round, and you will hear a whirring sound or pulsating noise from the compressor.
- A thermostat controls the compressor, and you will hear a faint ’click’ when the thermostat cuts in and out.

Download from Www.Somanuals.com. All Manuals Search And Download.

Movable shelves

The walls of the refrigerator have runners so that shelves can be positioned as desired.

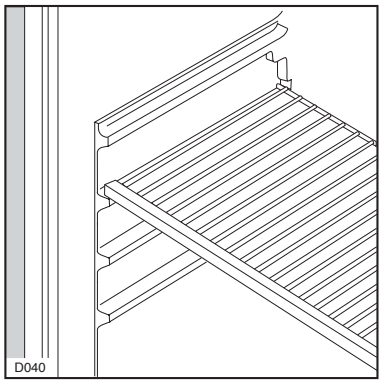

Positioning the door shelves

To permit storage of food packages of various sizes, the door shelves can be adjusted in height.

To do this proceed as shown in the diagram:

Gradually pull the shelf in the direction of the arrows until it comes free, then reposition as required.

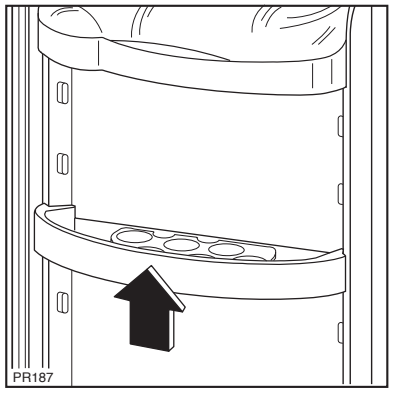

Download from Www.Somanuals.com. All Manuals Search And Download.

HEALTH AND SAFETY GUIDELINES

Because of consumer demand, preservatives have been removed from many pre-prepared foods. This together with the changes in shopping habits to a once-a-week shop, mean that safe handling and storage of food is even more important than ever.

The following tips should help you to ensure that the food in your home is in as perfect condition as possible.

- Keep the time between buying chilled food and placing it in your fridge as short as possible. Tests showed that the temperature of 1 litre of orange juice rose to 22°C in an hour between the supermarket and home. It then took 11 hours to get down to 7°C in the refrigerator.
- Keep the refrigerator door closed as much as possible.
- Do not push food together too much, try to allow air to circulate around each item.
- Cool cooked food as quickly as possible but do NOT place in the refrigerator until cool. (Leave food in a cool place in order that it can then be put in the refrigerator as soon as possible).
- Do NOT mix raw and cooked meat, they must be in separate containers. Take care not to let the meat juices drip onto other food. If the meat does drip, remove everything and clean thoroughly.
- Do not store food uncovered.
- The best way to defrost food is to put it in the refrigerator to thaw slowly.
- Remove suspect food from your refrigerator and clean (refer to “Maintenance and Cleaning).
- Never allow spillages to dry and harden.
- Ensure that food placed in the freezer is dated and labelled and used in date order to ensure that food is consumed at its best.
- It is important that food is used before its “best before” date.
- Store eggs in the egg rack provided in the refrigerator door. Discard any broken or chipped eggs.
- Regularly check the refrigerator door seal to ensure that it is clean and free from debris.
- Always wash your hands with soapy water and dry them with a clean towel before handling food.
- Keep work surfaces clean and avoid cross contamination by not using the same work surface or knife, without washing them thoroughly in between.
- The fresh foods to be frozen must be fresh and of the best quality.
- The size of each pack should be small enough to ensure that it is used in one go . Small packs freeze more quickly and uniformly and give better results.
- Frozen food, once thawed, must not be refrozen. Lean food keeps better and longer than fatty food, salt reduces the storage time.
- Wrap the food in polythene or aluminium freezing bags or foil so that they adhere to the food and provide an airlight seal .
- Packaging which is swollen or has traces of refrozen water droplets on the pack could indicate that the product has not been kept at a suitable temperature and that it may have lost its original quality. Partially thawed food must not be refrozen, it must be consumed within 24 hours. Never exceed the storage times indicated.
- Never place hot food, bottles or cans of fizzy drink in the freezer as they may explode. Containers with a lid must not be filled to the brim.
- Do not open the door or place extra fresh food in the freezer next to food which is already frozen as this could cause the temperature of the frozen food to rise and its quality and storage life to reduce .

Download from Www.Somanuals.com. All Manuals Search And Download.

MAINTENANCE AND CLEANING

Before any maintenance or cleaning work is carried out, DISCONNECT the appliance from the ELECTRICITY supply.

Internal cleaning

Clean the inside and accessories with warm water and bicarbonate of soda (5ml to 0.5 litre of water). Rinse and dry thoroughly.

⚠ **NEVER USE DETERGENTS, ABRASIVE POWDERS, HIGHLY PERFUMED CLEANING PRODUCTS OR WAX POLISHES, TO CLEAN THE INTERIOR AS THESE WILL DAMAGE THE SURFACE AND LEAVE A STRONG ODOUR.**

External cleaning

Wash the outer cabinet with warm soapy water. Do NOT use abrasive products.

An accumulation of dust will affect the performance of the appliance and cause excessive electricity consumption.

You MUST ensure that the appliance is switched OFF.

Once or twice a year dust the condenser (black grill) and the compressor at the back of the appliance, with a brush or vacuum cleaner, see figure.

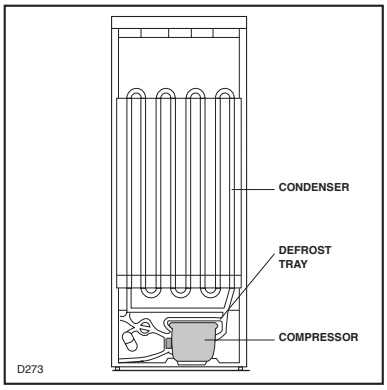

When the appliance is not in use

When the appliance is not in use for long periods, disconnect from the electricity supply, empty all foods and clean the appliance, leaving the doors ajar to prevent unpleasant smells.

Changing the light bulb

Should the interior light fail to work, first switch off the appliance and disconnect from the electricity supply, then replace the bulb as follows;

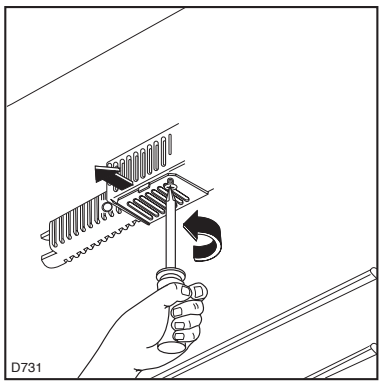

Unscrew the light cover and then pull it outward by pressing as shown in the figure. Unscrew the bulb and replace it with a new 15 watt bulb (available from your nearest Service Force Centre).

Replace the light cover by sliding it into its original position and replacing the screw.

Defrosting

Refrigerator

The refrigerator automatically defrosts every time the compressor stops. The water is discharged, via the pipe, into a tray located at the back of the appliance above the compressor, where it evaporates.

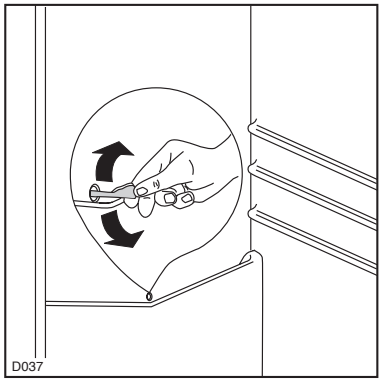

⚠ Important

To avoid defrost water overflowing into the fridge, periodically clean the water discharge hole in the centre of the V shaped drip collector at the back of the refrigerator compartment behind the fruit and vegetable drawer. Use the defrost cleaner provided which you will find already inserted into the discharge hole.

Download from Www.Somanuals.com. All Manuals Search And Download.

Remember to wash the defrost cleaner in hot soapy water at regular intervals. Dry throughly before replacing.

Freezer

The freezer compartment will become progressively covered with frost.
When the frost has reached a thickness of up to 4mm it can be removed using a plastic scraper. During this operation it is not necessary to disconnect the appliance from the mains and remove the food. Never use metal tools for this operation. However, when the ice becomes very thick on the inner liner, complete defrosting should be carried out.
For complete defrosting (once or twice a year) proceed as follows:

- Turn the thermostat dial to the «OFF» position (O) or disconnect the appliance from the mains.
- Remove any food from inside the freezer and fridge, wrap it in several sheets of newspaper and store in a cool,dry place.
- Leave the door open.
- Clean and dry thoroughly.
- Reconnect the appliance to the mains or reset the thermostat to a functioning position.
- After letting the appliance run for a least half an hour, replace the previously removed food into the compartment.



Important

When defrosting the freezer, the fridge is also controlled by the thermostat and will not be operational during this period. A temperature rise of the frozen food packs, during defrosting, may shorten their safe storage life.



Attention!

In the event of a power failure causing the temperature within your freezer to rise, do not re-freeze the food without checking its condition. The following guidelines should assist you.

Ice-cream: once thawed should be discarded.
Fruits & Vegetables: if soft should be cooked and used up.
Breads & Cakes: can be re-frozen without danger.
Shellfish: should be refrigerated and used up quickly.
Cooked Dishes: i.e. casseroles should be refrigerated and used up.
Large Pieces of Meat: can be re-frozen providing there are still ice crystals remaining within them.
Small Joints: should be cooked and can then be re-frozen as cooked dishes.
Chicken: should also be cooked and re-frozen as a cooked dish.

Download from Www.Somanuals.com. All Manuals Search And Download.

SOMETHING NOT WORKING

Important: If you call out an engineer to a fault listed below, or to repair a fault caused by incorrect use or installation a charge will be made, even if the appliance is under guarantee.

Before contacting your local Service Force Centre, check the following points:

Symptom	Solution
No power to the appliance	Check there is power at the socket.
	Check there is not a power cut by checking the household lights.
	Check the fuse has not blown.
The light does not come on	Ensure that the bulb is correctly fitted.
	Replace the bulb if it has blown.
	Check the door light switch is not jammed.
The temperature in the fridge or freezer section is too high	Check the temperature in the fridge is turned to the correct setting relative to ambient conditions.
	Check the ambient temperature is within the appliance's operating limits of 10°C to 32°C. Relocate the appliance if necessary.
The freezer door will not open	Has door just been opened? If so leave for a few minutes to allow the air pressure to equalise.
The compressor runs continously	Adjust the thermostat to give correct temperature control. See "Setting the temperature".
	Check that the doors are closed.
	Large quantities of food have recently been placed in the cabinet and/or door is frequently opened.
	Check that air ventilation is not obstructed.
Excessive frost and ice has built up	Ensure the doors are not left open.
	Check that nothing is preventing the doors from closing.
	Is the door gasket intact and clean.
	Has advised periodic defrosting been carried out.
Noise	Refer to normal operating sounds.
Water under the salad bin	Check the drain hole is not blocked. (see Maintenance and Cleaning).

Download from Www.Somanuals.com. All Manuals Search And Download.

SERVICE AND SPARE PARTS

In the event of your appliance requiring service, or if you wish to purchase spare parts, please contact your local Tricity Bendix Service Force Centre by telephoning:-

0870 5 929929

Your telephone call will be automatically routed to the Service Force Centre covering your post code area.

The addresses are listed on the following pages.

Before calling out an engineer, please ensure you have read the details under the heading ‘Something Not Working?

When you contact the Service Force Centre you will need to give the following details:

1. Your name, address and post code
2. Your telephone number
3. Clear and concise details of the fault
4. The model and serial number of the appliance (found on the rating plate)
5. The purchase date

CUSTOMER CARE DEPARTMENT

For general enquiries concerning your Tricity Bendix appliance or for further information on Tricity Bendix products, please contact our Customer Care Department by letter or telephone as follows:-

Customer Care Department

Tricity Bendix

55-77 High Street

Slough

Berkshire

SLI IDZ

08705 950 950 *

* calls to this number may be recorded for training purposes.

Download from Www.Somanuals.com. All Manuals Search And Download.

Tricity Bendix Service Force

To contact your local Tricity Bendix Service Centre telephone 08705 929 929

CHANNEL ISLANDS

GUERNSEY	Guernsey Electricity PO Box 4 Vale, Guernsey Channel Islands
JERSEY	Jersey Electricity Company PO Box 45 Queens Road St Helier Jersey Channel Islands JE4 8NY

SCOTLAND

ABERDEEN (M05)	54 Claremont Street Aberdeen AB10 6RA
AUCHTERMUCHY (M03)	33a Burnside Auchtermuchy Fife KY14 7AJ
BLANTYRE (M07)	Unit 5 Block 2 Auchenraith Ind. Estate Rosendale Way Blantyre G72 0NJ
DUMFRIES (M01)	93 Irish Street Dumfries Scotland DG1 2 PQ
DUNOON (M67)	Brair Hill 7 Hill Street Dunoon Argyll PA23 7AL
GLASGOW (M04)	20 Cunningham Road Clyde Estate Rutherglen Glasgow G73 1PP
INVERNESS (M06)	Unit 3B Smithton Ind. Estate Smithton Inverness IV1 AJ
ISLE OF ARRAN (OWN SALES)	Arran Domestics Unit 4 The Douglas Centre Brodick Isle of Arran KA27 8AJ
ISLE OF BARRA (OWN SALES)	J Zerfah 244 Bruernish Isle of Barra Western Islands HS9 5QY
ISLES OF BUTE	Walker Engineering Glenmhor Upper Serpentine Road Rothesay Isle of Bute PA20 9EH
ISLE OF LEWIS	ND Macleod 16 James Street Stornoway Isle of Lewis PA87 2QW
KELSO (M08)	2-8 Wood Market Kelso Borders TD5 7AX
ORKNEY (M65)	Corsie Domestics 7 King Street Kirkwall Orkney KW15
PERTH	Hydro Electrical Inveralmond House Ruthervenfield Road Perth PH1 3AQ
PERTH (OWN SALES)	Graham Begg Unit 4 Airport Ind Estate Wick KW1 4QS
SHETLAND (OWN SALES)	Tait Electronic Systems Ltd Holmsgarth Road Lerwick Shetland ZE1 0PW
SHETLAND (OWN SALES)	Bolts Shetland Ltd. 26 North Road Lerwick Shetland ZE1 0PE
WHALSAY (OWN SALES)	Leask Electrical Harisdale Symbister, Whalsay Shetland ZE2 9AA

NORTHERN IRELAND

BELFAST (M27)	Owenmore House Kilwee Business Park Upper Dunmury Lane Belfast BT17 0HD

WALES

CARDIFF (M28)	Guardian Industrial Estate Clydesmuir Road Tremorfa Cardiff CF2 2QS
CLYWD (M14)	Unit 6-7 Coed – Parc Abergele Road Rhuddlan Clwyd Wales LL18 5UG
DYFED (M77)	Maes Y Coed High Mead Llanybydder Carmarthenshire SA40 9UL
HAVERFORDWEST (M75)	Cromlech Lodge Ambleston Haverfordwest Pembrokeshire SA62 5DS
OSWESTRY (M17)	Plas Ffynnon Warehouse Middleton Road Oswestry SY11 2PP

NORTH EAST

GATESHEAD (M39)	Unit 356a Dukesway Court Dukesway Team Valley Gateshead NE11 0BH
GRIMSBY (M42)	15 Hainton Avenue Grimsby South Humberside DN32 9AS
HULL (M41)	Unit 1 Boulevard Industrial Estate Hull HU3 4AY
LEEDS (M37)	64-66 Cross Gates Road Leeds LS15 7NN
NEWTON AYCLIFFE (M45)	Unit 16 Gurney Way Aycliffe Industrial Estate Newton Aycliffe DL5 6UJ
SHEFFIELD (M38)	Pennine House Roman Ridge Ind. Roman Ridge Road Sheffield S9 1GB

NORTH WEST

BIRKENHEAD (M11)	1 Kelvin Park Dock Road Birkenhead L41 1LT
CARLISLE (M10)	Unit 7 James Street Workshops James Street Carlisle Cumbria CA2 5AH
ISLE OF MAN (M64)	South Quay Ind. Estate Douglas Isle of Man IM1 5AT
LIVERPOOL (M15)	Unit 1 Honeys Green Precinct Honeys Green Lane Liverpool L12 9JH
MANCHESTER (M09)	Unit B Central Industrial Estate St Marks Street Bolton BL3 6NR
PRESTON (M13)	Unit 250 Dawson Place Walton Summit Bamber Bridge Preston Lancashire PR5 8AL
STOCKPORT (M16)	Unit 20 Haigh Park Haigh Avenue Stockport SK4 1QR

Download from Www.Somanuals.com. All Manuals Search And Download.

Tricity Bendix Service Force

To contact your local Tricity Bendix Service Centre telephone 08705 929 929

MIDLANDS

BIRMINGHAM (M18)	66 Birch Road East Wyrley Road Ind. Estate Witton Birmingham B6 6DB
BOURNE (M44)	Manning Road Ind. Estate Pinfold Road Bourne PE10 9HT
BRIDGNORTH (M72)	68 St. Mary's Street Bridgnorth Shropshire WV16 4DR
GLOUCESTER (M23)	101 Rycroft Street Gloucester GL1 4NB
HEREFORD (M31)	Unit 3 Bank Buildings Cattle market Hareford HE4 9HX
HIGHAM FERRERS (M51)	30 High Street Higham Ferrers Northants NN10 8BB
ILKESTON (M43)	Unit 2 Furnace Road Ilkeston DE7 5EP
LEICESTER (M22)	Unit 7 Oaks Ind. Estate Coventry Road Narborough Leicestershire LE0 5GF
LINCOLN (M40)	Unit 8 Stonefield Park Clifton Street Lincoln LN5 8AA
NEWCASTLE UNDER LYME (M12)	18-21 Croft Road Brampton Ind. Estate Newcastle under Lyme Staffordshire ST5 0TW
REDDITCH (M20)	13 Thornhill Road North Moons Moat Redditch Worcestershire B98 9ND
TAMWORTH (M19)	Unit 3 Sterling Park Claymore Tamworth B77 5DO
WORCESTER (M73)	Units 1 & 2 Northbrook Close Gregorys Mill Ind. Estate Worcester WR3 8BP

LONDON & EAST ANGLIA

BECKENHAM (M79)	11a Gardener Ind. Estate Kent House Lane Beckenham Kent BR3 1QZ
CHELMSFORD (M47)	Hanbury Road Widford Ind. Estate Chelmsford Essex CM12 3AE
COLINDALE (M53)	Unit 14 Capitol Park Capitol Way Colindale London NW9 0EQ
ELTHAM (M78)	194 Court Road Mottingham Eltham London SE9 4EW
ENFIELD (M49)	284 Alma Road Enfield London EN3 7BB
GRAVESEND (M57)	Unit B4 Imperial Business Estate Gravesend Kent DA11 0DL
HARPENDEN (M46)	Unit 4 Riverside Estate Coldharbour Lane Harpenden AL5 4UN
LETCHWORTH (M50)	16-17 Woodside Ind. Estate Works Road Letchworth Herts SG6 1LA
LONDON (M76)	2/4 Royal Lane Yiewsley West Drayton Middlesex UB7 8DL
MAIDENHEAD (M60)	Reform Road Maidenhead Berkshire SL6 8BY
MOLESEY (M61)	10 Island Farm Avenue West Molesey Surrey KT8 2UZ
NEWBURY (M24)	9 Pipers Court Berkshire Drive Thatcham Berkshire RG19 4ER
IPSWICH (M48)	Unit 6C Elton Park Business Centre Hadleigh Road Ipswich IP2 0DD
NORWICH (M52)	2b Trafalgar Street Norwich NR1 3HN
SUNBURY (M63)	Unit 1a The Summit Hanworth Road Hanworth Ind. Estate Sunbury on Thames TW16 5D

SOUTH EAST

ASHFORD (M58)	Unit 2 Bridge Road Business Est. Bridge Road Ashford Kent TN2 1BB
FLEET (M59)	Unit 1 Redsfield Ind. Estate Church Crookham Fleet Hampshire GU13 0RD
HAYWARDS HEATH (M55)	21-25 Bridge Road Haywards Heath Sussex RH16 1UA

SOUTH WEST

BARNSTAPLE (M30)	Main Road Fremington Barnstaple North Devon EX31 2NT
BOURNEMOUTH (M26)	63-65 Curzon Road Bournemouth Dorset BH1 4PW
BRIDGEWATER (M35)	6 Hamp Ind. Estate Bridgewater Somerset TA6 3NT
BRISTOL (M25)	11 Eldon Way Eldonwall Trading Bristol Avon BS4 3QQ
EMSWORTH (M33)	266 Main Road Southbourne Emsworth PO10 8JL
ISLE OF WIGHT (M34)	Unit 8 Enterprise Court Ryde Business Park Ryde Isle of Wight PO33 1DB
NEWTON ABBOT (M29)	Unit 2 Zealley Ind. Estate Kingsteignton Newton Abbot S. Devon TQ12 3TD
REDRUTH (M36)	Unit 7D Pool Ind. Estate Wilson Way Redruth Cornwall TR15 3QW

Download from Www.Somanuals.com. All Manuals Search And Download.

GUARANTEE CONDITIONS

Standard guarantee conditions

We, Tricity Bendix, undertake that if within 12 months of the date of the purchase this Tricity Bendix appliance or any part thereof is proved to be defective by reason only of faulty workmanship or materials, we will, at our option repair or replace the same FREE OF CHARGE for labour, materials or carriage on condition that:

The appliance has been correctly installed and used only on the electricity supply stated on the rating plate.

The appliance has been used for normal domestic purposes only, and in accordance with the manufacturer's instructions.

The appliance has not been serviced, maintained, repaired, taken apart or tampered with by any person not authorised by us.

All service work under this guarantee must be undertaken by a Tricity Bendix Service Force Centre. Any appliance or defective part replaced shall become the Company's property.

This guarantee is in addition to your statutory and other legal rights.

Home visits are made between **8.30am and 5.30pm** Monday to Friday. Visits may be available outside these hours in which case a **premium** will be charged.

Exclusions

This guarantee does not cover:

Damage or calls resulting from transportation, improper use or neglect, the replacement of any light bulbs or removable parts of glass or plastic.

Costs incurred for calls to put right an appliance which is improperly installed or calls to appliances outside the European Community (EC) or European Free Trade Area.

Appliances found to be in use within a commercial environment, plus those which are subject to rental agreements.

Products of Tricity Bendix manufacture which are not marketed by Tricity Bendix.

European Guarantee

The standard one year guarantee is for the same period and the same extent for labour and parts as exists in the new country of use for this brand or range of products.

Customer Care Centre:

Ireland	**Dublin**	**353-1-4090752**

If you should move to another country within Europe then your guarantee moves with you to your new home subject to the following qualifications:

The guarantee starts from the date you first purchased your product.

The guarantee is for the same period and to the same extent for labour and parts as exists in the new country of use for this brand or range of products.

This guarantee relates to you and cannot be transferred to another user.

Your new home is within the European Community (EC) or European Free Trade Area.

The product is installed and used in accordance with our instructions and is only used domestically, i.e. a normal household.

The product is installed taking into account regulations in your new country.

Before you move please contact your nearest Customer Care centre, listed below, to give them details of your new home. They will then ensure that the local Service Organisation is aware of your move and able to look after you and your appliances.

France	Senlis	+33 (0)3 44 62 28 28
Germany	Nürnberg	+49 (0)911 323 2600
Italy	Pordenone	+39 (0)1678 47053
Sweden	Stockholm	+46 (0)20 78 77 50
UK	Slough	+44 (0)1735 219898

Download from Www.Somanuals.com. All Manuals Search And Download.

TECHNICAL SPECIFICATIONS

DIMENSIONS		
	Height	145 cm
	Width	52.5 cm
	Depth	59 cm
POWER SUPPLY VOLTAGE AND FREQUENCY		220-240 V / 50 Hz
TOTAL POWER ABSORBED		120 W
AVERAGE DAILY UNITS ELECTRICITY *		1.20 kWh
GROSS CAPACITY		
	Fridge	185 l
	Freezer	40 l
NET CAPACITY		
	Fridge	177 l
	Freezer	40 l
STAR RATING		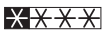

* This figure is based on standard test results in accordance with European Standard EN 153. Actual consumption will depend on how the appliance is used and where it is located.

Download from Www.Somanuals.com. All Manuals Search And Download.

INSTALLATION

⚠ Warning

IF YOU ARE DISCARDING AN OLD APPLIANCE THAT HAS A LOCK OR CATCH ON THE DOOR, YOU MUST ENSURE THAT IT IS MADE UNUSABLE TO PREVENT YOUNG CHILDREN BEING TRAPPED INSIDE.

Depending upon the position which you choose for your appliance, you may wish to reverse the way in which the door opens. To do this, refer to instructions on “Door reversal directions” paragraph.

Positioning

This appliance is designed to operate in ambient temperatures between 10°C (50° F) and 32°C (90° F). It should be located in a dry atmosphere, out of direct sunlight and away from extreme temperature e.g. not next to a boiler or radiator, or in a very cold room e.g. an outhouse, where the temperatures may fall below 10°C (50° F). If these temperatures are exceeded i.e. colder or warmer, then the appliance may not operate correctly.

You should also ensure that air can circulate freely around the back and the top of the cabinet. There must also be at least 100 mm (4”) distance between the top of the cabinet and any overhanging kitchen furniture (A). Ideally, the appliance should not be positioned beneath overhanging furniture (B).

There should also be a gap of 25 mm either side of the appliance. Do not obstruct the space underneath. The back of the cabinet may be placed close to the wall but must not touch it. DO NOT install in places with restricted ventilation.

Adjust the level of the appliance by screwing out the adjustable foot, or feet, at the bottom of the cabinet using your fingers.

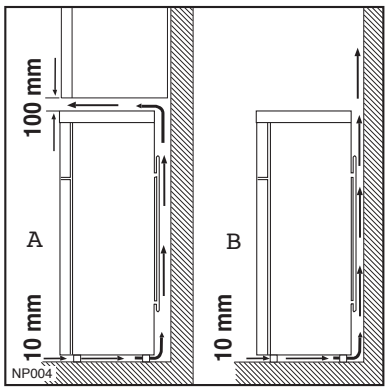

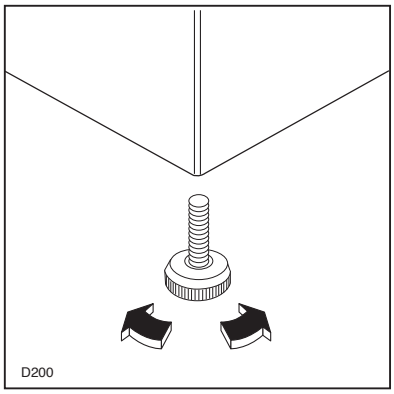

Download from Www.Somanuals.com. All Manuals Search And Download.

⚠ Electrical connections

Any electrical work required to install this appliance should be carried out by a qualified electrician or competent person.

WARNING: THIS APPLIANCE MUST BE EARTHED.

The manufacturer declines any liability should this safety measure not be observed.

If the plug that is fitted to your appliance is not suitable for your socket outlet, it must be cut off and the appropriate plug fitted.

Remove the fuse from the cut off plug.

The cut off plug should then be disposed of to prevent the hazard of shocks in case it should be plugged into a 13amp socket in another part of your home.

⚠ Important

The wires in the mains lead are coloured in accordance with the following code:

Green and Yellow - Earth

Blue - Neutral

Brown - Live

If you fit your own plug, the colours of the wires in the mains lead of your appliance may not correspond with the markings identifying the terminals in your plug, proceed as follows:

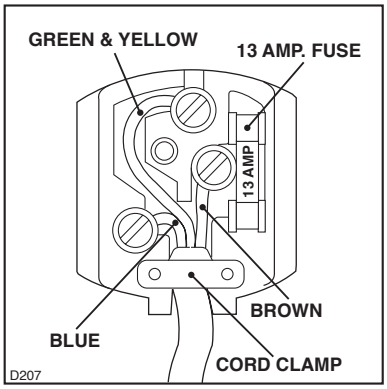

Connect the Green and Yellow (earth) wire to the terminal in the plug which is marked with the letter «E» or the earth symbol ⏚ or coloured green and yellow.

Connect the blue (neutral) wire to the terminal in the plug which is marked with the letter «N» or coloured black.

Connect the brown (live) wire to the terminal in the plug which is marked with the letter «L» or coloured red.

The plug moulded onto the lead incorporates a fuse. For replacement, use a 13amp BSI362 fuse. Only ASTA or BSI approved fuses should be used.

The plug must not be used if the fuse cover/carrier is lost. The cover/carrier is indicated by the coloured insert at the base of the plug.

A replacement cover/carrier must be obtained from your local Tricity Bendix Service Force Centre.

This appliance complies with the E.E.C. Directive No. 87/308 of 2.6.87 relative to radio interference suppression.

CE This appliance complies with the following E.E.C. Directives:

- **73/23 EEC of 19.2.73** (Low Voltage Directive) and subsequent modifications;
- **89/336 EEC of 3.5.89** (Electromagnetic Compatibility Directive) and subsequent modifications.

Please ensure that when the appliance is installed it is easily accessible for the engineer in the event of a breakdown.

Download from Www.Somanuals.com. All Manuals Search And Download.

Door reversal directions

Important

Before carrying out the operations described below unplug the mains lead from the wall socket.
To carry out this reversal, proceed as follows:

1. Gently lay the fridge-freezer on its back with the top held away from the floor by 5-8 cm (2-3 inches) of packing.
2. Using a PHILLIPS screwdriver remove the top hinge.
3. Slide out the upper door from the middle hinge.
4. Unscrew the left levelling foot.
   Unscrew the right levelling foot, hinge and refit them on the left side.
   Refit the other foot on the right side.
5. Slide out the lower door from the middle hinge.
6. Remove the middle hinge.
7. Remove the plastic plugs from the screw holes of the new top & middle hinge location and refit them in the holes on the opposite side.
8. Remove the screws from the new location of the bottom hinge and refit them in the free holes on the opposite side.
9. Refit the middle hinge as shown in Fig., i.e. up-side-down with respect to the previous position.
10. Replace the lower & upper door making sure that the pins of the middle hinge fit into the corresponding bushing on the door.
11. Replace the bottom hinge on the left side of the lower base of the cabinet (the fastening holes are already provided). Refit the top hinge.

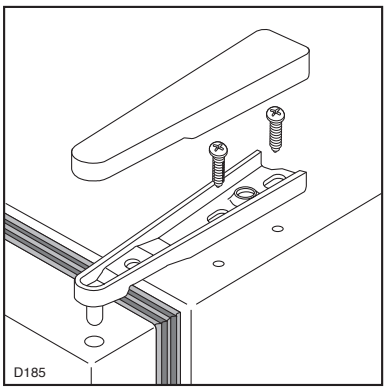

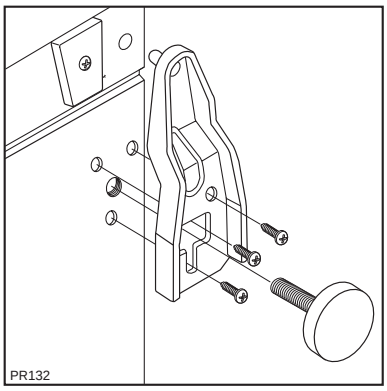

Important

The central hinge is designed to allow a certain amount of side clearance (play), i.e. approx. 3 mm horizontally, which makes it easy to line up the two doors by proceeding as follows:
Loosen the two screws securing the hinge to the cabinet.
Carefully position the hinge until the two doors are perfectly aligned, then firmly screw down the hinge in its new setting (position).

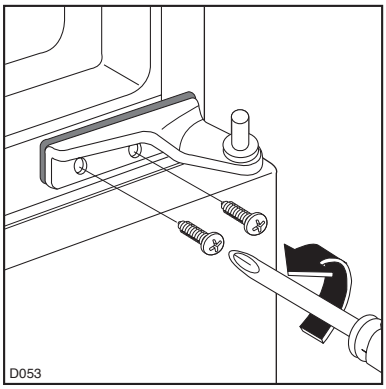

Reversing door handles

Remove the handle by unscrewing the two fastening screws.
Remove the plastic plugs from the screw holes of the new handle location and refit them in the free holes onthe opposite side;
Refit the handle upside-down, on the opposite side of the door.

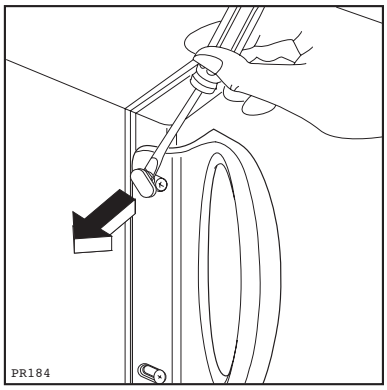

⚠ Attention

After completion of the door reversing operation, check that the door gasket adheres to the cabinet. If the ambient temperature is cold (i.e. in Winter), the gasket may not fit perfectly to the cabinet. In that case, wait for the natural fitting of the gasket or accelerate this process by heating up the part involved with a normal hairdrier.

Printed on recycled paper

Download from Www.Somanuals.com. All Manuals Search And Download.

TRICITY BENDIX

Tricity Bendix, 99 Oakley Road, Luton, Beds LU49QQ

Consumer care telephone number……

Download from Www.Somanuals.com. All Manuals Search And Download.

Free Manuals Download Website

http://myh66.com

http://usermanuals.us

http://www.somanuals.com

http://www.4manuals.cc

http://www.manual-lib.com

http://www.404manual.com

http://www.luxmanual.com

http://aubethermostatmanual.com

Golf course search by state

http://golfingnear.com

Email search by domain

http://emailbydomain.com

Auto manuals search

http://auto.somanuals.com

TV manuals search

http://tv.somanuals.com