User Manual

BC269TMF

Refrigerator Freezer

Content	
1. Safety Information	Page 1~5
2. Overview	Page 6
3. Installation	Page 7~11
4. Daily Use	Page 12~16

⚠ Safety information

In the interest of your safety and to ensure the correct use, before installing and first using the appliance, read this user manual carefully, including its hints and warnings. To avoid unnecessary mistakes and accidents, it is important to ensure that all people using the appliance are thoroughly familiar with its operation and safety features. Save these instructions and make sure that they remain with the appliance if it is moved or sold, so that everyone using it through its life will be properly informed on appliance use and safety.
For the safety of life and property keep the precautions of these user's instructions as the manufacturer is not responsible for damages caused by omission.

- This appliance can be used by children aged from 8 years and above and persons with reduced physical, sensory or mental capabilities or lack of experience and knowledge if they have been given super vision or instruction concerning use of the appliance in a safe way and understand the hazards involved.
- Children should be supervised to ensure that they do not play with the appliance.
- Keep all packaging well away from children. There is risk of suffocation.
- If you are discarding the appliance pull the plug out of the socket, cut the connection cable (as close to the appliance as you can) and remove the door to prevent playing children to suffer electric shock or to close themselves into it.
- If this appliance featuring magnetic door seals is to replace an older appliance having a spring lock (latch) on the door or lid, be sure to make that spring lack unusable before you discard the old appliance. This will prevent it from becoming a death trap for a child.

General safety

⚠**WARNING!** Keep ventilation openings, in the appliance enclosure or in the built-in structure, clear of obstruction.

⚠**WARNING!** Do not use mechanical devices or other means to accelerate the defrosting process, other than those recommended by the manufacturer.

⚠**WARNING!** Do not damage the refrigerant circuit.

⚠ Safety information

⚠**WARNING!** Do not use other electrical appliances (such as ice cream makers) inside of refrigerating appliances, unless they are approved for this purpose by the manufacture.

⚠**WARNING!** Do not touch the light bulb if it has been on for a long period of time because it could be very hot.[1)]

- Do not store explosive substances such as aerosol cans with a flammable propellant in this appliance.
- The refrigerant isobutane (R600a) is contained within the refrigerant circuit of the appliance, a natural gas with a high level of environmental compatibility, which is nevertheless flammable.
- During transportation and installation of the appliance, be certain that none of the components of the refrigerant circuit become damaged.
  - avoid open flames and sources of ignition
  - thoroughly ventilate the room in which the appliance is situated
- It is dangerous to alter the specifications or modify this product in any way. Any damage to the cord may cause a short circuit, fire and/or electric shock.
- This appliance is intended to be used in household and similar applications such as
  - staff kitchen areas in shops, offices and other working environments;
  - farm houses and by clients in hotels, motels and other residential type environments;
  - bed and breakfast type environments;
  - catering and similar non-retail applications.

⚠**WARNING!** Any electrical components(plug, power cord, compressor and etc.) must be replaced by a certified service agent or qualified service personnel.

⚠**WARNING!** The light bulb supplied with this appliance is a “special use lamp bulb” usable only with the appliance supplied. This “special use lamp” is not usable for domestic lighting.[1)]

1) If there is a light in the compartment.

⚠ Safety information

- Power cord must not be lengthened.
- Make sure that the power plug is not squashed or damaged by the back of the appliance. A squashed or damaged power plug may overheat and cause a fire.
- Make sure that you can come to the mains plug of the appliance.
- Do not pull the mains cable.
- If the power plug socket is loose, do not insert the power plug. There is a risk of electric shock or fire.
- You must not operate the appliance without the lamp.
- This appliance is heavy. Care should be taken when moving it.
- Do not remove nor touch items from the freezer compartment if you hands are damp/wet, as this could cause skin abrasions or frost/freezer burns.
- Avoid prolonged exposure of the appliance to direct sunlight.

Daily use

- Do not put hot on the plastic parts in the appliance.
- Do not place food products directly against the rear wall.
- Frozen food must not be re-frozen once it has been thawed out.[1)]
- Store pre-packed frozen food in accordance with the frozen food manufacture's instructions.[1)]
- Appliance's manufactures storage recommendations should be strictly adhered to. Refer to relevant instructions.
- Do not place carbonated of fizzy drinks in the freezer compartment as it creates pressure on the container, which may cause it to explode, resulting in damage to the appliance.[1)]
- Ice lollies can cause frost burns if consumed straight from the appliance.[1)]

Care and cleaning

- Before maintenance, switch off the appliance and disconnect the mains plug from the mains socket.
- Do not clean the appliance with metal objects.
- Do not use sharp objects to remove frost from the appliance. Use a plastic scraper.[1)]
- Regularly examine the drain in the refrigerator for defrosted water. If necessary, clean the drain. If the drain is blocked, water will collect in te bottom of the appliance.[2)]

1) If there is a freezer compartment.
2) If there is a fresh-food storage compartment.

⚠ Safety information

Installation

Important! For electrical connection carefully follow the instructions given in specific paragraphs.

- Unpack the appliance and check if there is any damage. Do not connect the appliance if it is damaged. Report possible damages immediately to the place you bought it. In that case retain packing.
- It is advisable to wait at least four hours before connecting the appliance to allow the oil to flow back in the compressor.
- Adequate air circulation should be around the appliance, to avoid overheating. To achieve sufficient ventilation follow the instructions relevant to installation.
- Wherever possible the spacers of the product should be against a wall to avoid touching or catching warm parts (compressor, condenser) to prevent possible burn.
- The appliance must not be located close to radiators or cookers.
- Make sure that the mains plug is accessible after the installation of the appliance.

Service

- Any electrical work required to do the servicing of the appliance should be carried out by a qualified electrician or competent person.
- This product must be serviced by an authorized Service Center, and only genuine spare parts must be used.

Energy saving

- Don’t put hot food in the appliance;
- Don’t pack food close together as this prevents air circulating;
- Make sure food doesn't touch the back of the compartment(s);
- If electricity goes off, don’t open the door(s);
- Don’t open the door(s) frequently;
- Don’t keep the door(s) open for too long time;
- Don’t set the thermostat on exceeding cold temperatures;
- Some accessories, such as drawers, can be removed to get larger storage volume and lower energy consumption.

⚠ Safety information

Environment Protection

This appliance does not contain gasses which could damage the ozone layer, in either its refrigerant circuit or insulation materials. The appliance shall not be discarded together with the urban refuse and rubbish. The insulation foam contains flammable gases: the appliance shall be disposed according to the appliance regulations to obtain from your local authorities. Avoid damaging the cooling unit, especially the heat exchanger. The materials used on this appliance marked by the symbol ♺ are recyclable.



The symbol on the product or on its packaging indicates that this product may not be treated as household waste. Instead it should be taken to the appropriate collection point for the recycling of electrical and electronic equipment. By ensuring this product is disposed of correctly, you will help prevent potential negative consequences for the environment and human health, which could otherwise be caused by inappropriate waste handling of this product. For more detailed information about recycling of this product, please contact your local council, your household waste disposal service or the shop where you purchased the product.

Packaging materials

The materials with the symbol are recyclable. Dispose the packaging in a suitable collection containers to recycle it.

Disposal of the appliance

1. Disconnect the mains plug from the mains socket.
2. Cut off the mains cable and discard it.

Overview

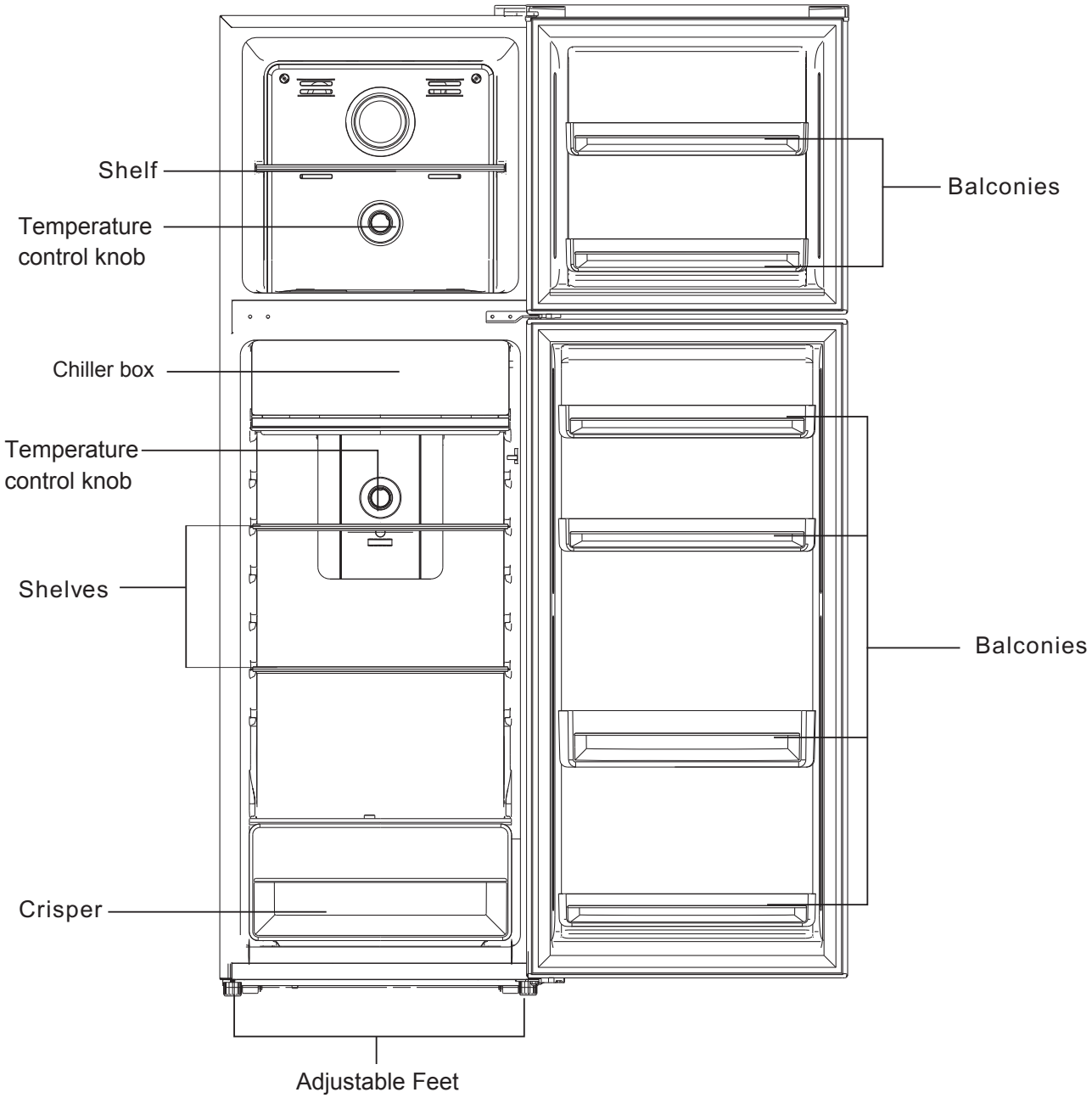

Note: Above picture is for reference only. The actual appliance maybe slightly different.

Installation

Before reversing the door, please be prepared below tools and material: straight screwdriver, cross screwdriver, spanner and the components included in the poly bag:

Left hinger x1 Left hinge cover x1 Left middle stopper x1 Left middle stopper metal block x1

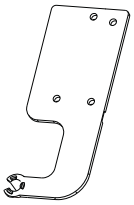
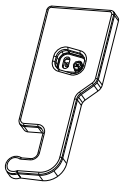



1. Close upper door, take out the screw from the top hinge covers by cross screwdriver. Take off hinge cover, then unscrew top hinge and take off upper door.

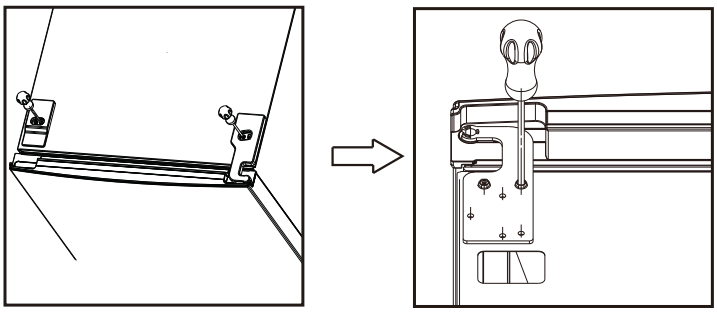

2. Unscrew from the middle hinge by cross screwdriver, then take off the lower door.

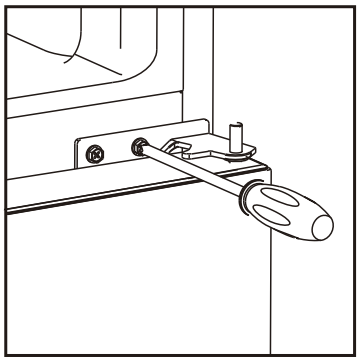

3. Laying down the refrigerator, take out the adjusting feet as below, then unscrew the lower hinge by cross screwdriver.

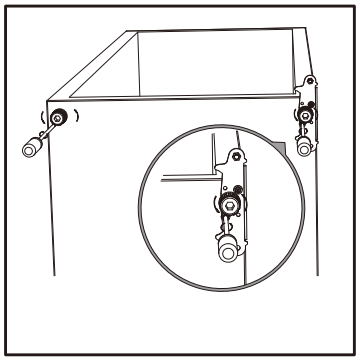

Installation

4 . Unscrew and remove the bottom hinge pin, turn the bracket over and replace it.

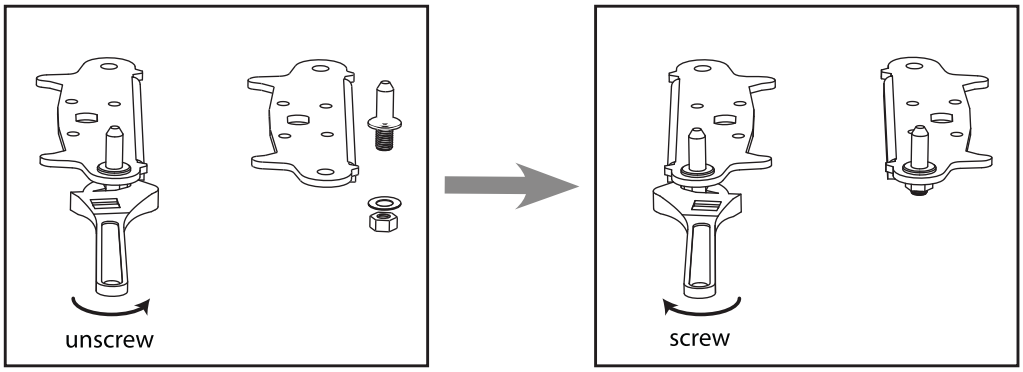

5. Refit the bracket fitting the bottom hinge pin. Replace both adjustable feet. Transfer the lower door to the property position.

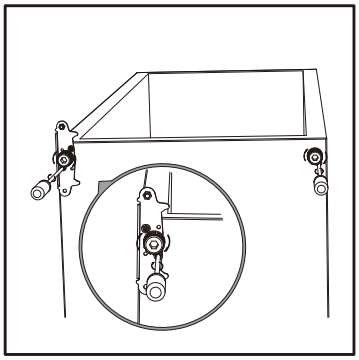

6. Make the middle hinge reverse the direction 180°C, then transfer it to the left property position. Make the middle hinge pin in the upper hole of the lower door, then tight the screws.

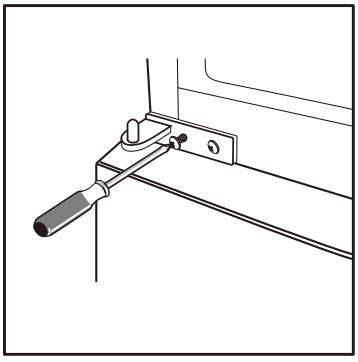

Installation

7. Unscrew right middle stopper with metal block from bottom of upper door. And then install left middle stopper and metal block in left side of bottom of upper door.

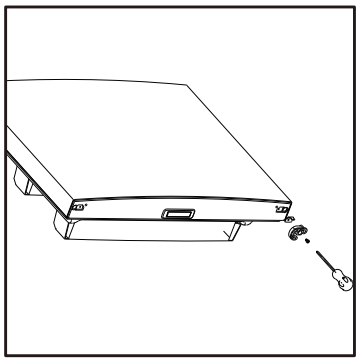

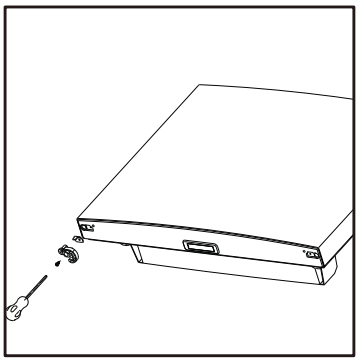

8 Install the upper door, fix the upper door hinge onto the cabinet .

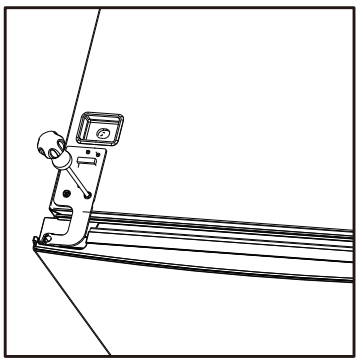

9. Take left hinge cover from accessary bag and install it with top hinge. Then install hole cover at right side.

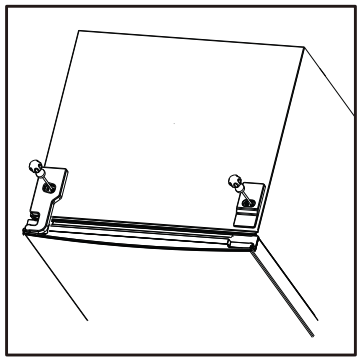

Installation

Space Requirement

- Select a location without direct exposure to sunlight;
- Select a location with enough space for the refrigerator doors to open easily;
- Select a location with level (or nearly level) flooring;
- Allow sufficient space to install the refrigerator on a flat surface;
- Allow clearance to the right, left, back and top when installing. This will help reduce power consumption and keep your energy bills lower.
- J ddo ‘ sld‘ r s0/ / l l eqnl sgd v ‘ lkksn sgd a‘ bj nesgd eqjcf d–

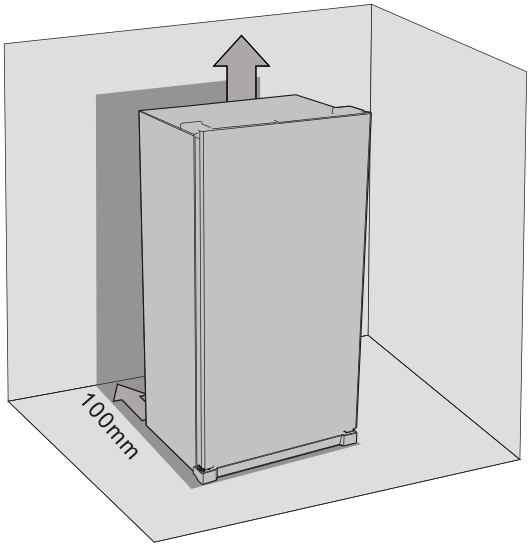

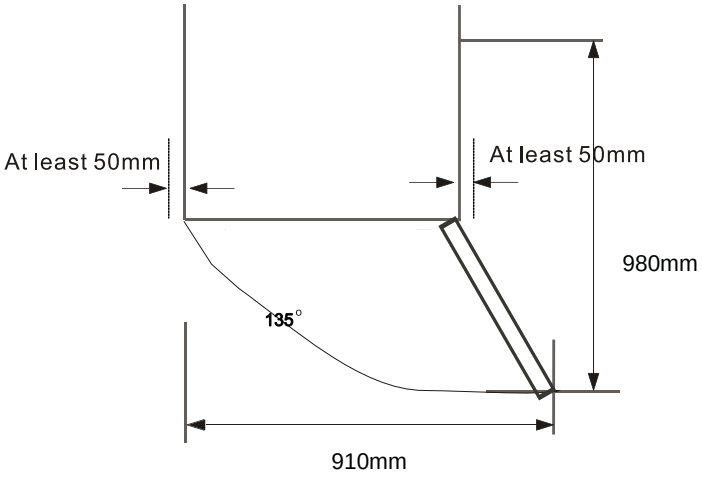

Levelling the unit

To do this adjust the two levelling feet at front of the unit.

If the unit is not level, the doors and magnetic seal alignments will not be covered properly.

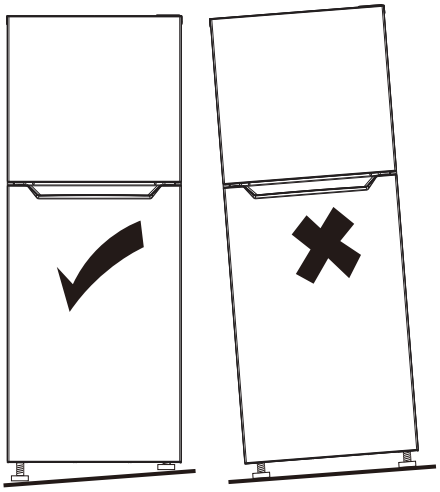

Installation

Positioning

Install this appliance at a location where the ambient temperature corresponds to the climate class indicated on the rating plate of the appliance:

Climate class	Ambient temperature
SN	+10°C to +32°C
N	+16°C to +32°C
ST	+16°C to +38°C
T	+16°C to +43°C

Location

The appliance should be installed well away from sources of heat such as radiators, boilers, direct sunlight etc. Ensure that air can circulate freely around the back of the cabinet. To ensure best performance, if the appliance is positioned below an overhanging wall unit, the minimum distance between the top of the cabinet and the wall unit must be at least 100 mm. Ideally, however, the appliance should not be positioned below overhanging wall units. Accurate leveling is ensured by one or more adjustable feet at the base of the cabinet.

⚠ **Warning!** It must be possible to disconnect the appliance from the mains power supply; the plug must therefore be easily accessible after installation.

Electrical connection

Before plugging in, ensure that the voltage and frequency shown on the rating plate correspond to your domestic power supply. The appliance must be earthed. The power supply cable plug is provided with a contact for this purpose. If the domestic power supply socket is not earthed, connect the appliance to a separate earth in compliance with current regulations, consulting a qualified electrician.
The manufacturer declines all responsibility if the above safety precautions are not observed.
This appliance complies with the E.E.C. Directives.

Daily Use

Using the Control Panel

Freezer compartment Temperature Setting

- Plug on your appliance. The internal temperature is controlled by a sensor. There are 3 settings: COLD, COLDER and COLDEST.
- The appliance may not operate at the correct temperature if it is in a particularly hot or if you open the door often.

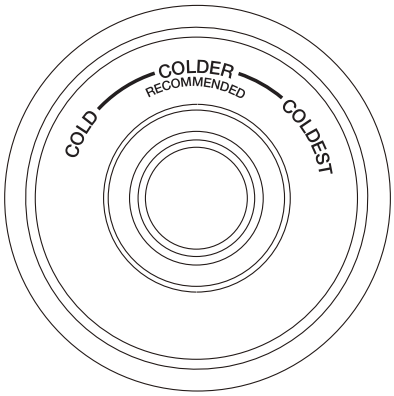

Fridge compartment Temperature Setting

- Plug on your appliance. The internal temperature is controlled by a sensor. There are 4 settings: OFF, COLD, COLDER and COLDEST. COLD is warmest setting and COLDEST is coldest setting, OFF is off.
- The appliance may not operate at the correct temperature if it is in a particularly hot or if you open the door often.
- Neither fridge or freezer compartment works when the setting is OFF.

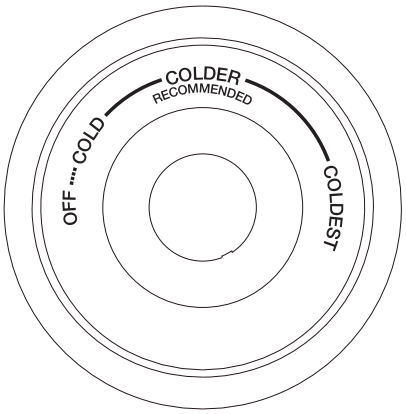

Daily Use

First use

Cleaning the interior

Before using the appliance for the first time, wash the interior and all internal accessories with lukewarm water and some neutral soap so as to remove the typical smell of a brand new product, then dry thoroughly.

Important! Do not use detergents or abrasive powders, as these will damage the finish.

Daily use

Freezing fresh food

- The freezer compartment is suitable for freezing fresh food and storing frozen and deep-frozen food for a long time.
- Place the fresh food to be frozen in the bottom compartment.
- The maximum amount of food that can be frozen in 24 hours is specified on the rating plate.
- The freezing process lasts 24 hours: during this period do not add other food to be frozen.

Storing frozen food

When first starting-up or after a period out of use, before putting the product in the compartment let the appliance run at least 2 hours on the higher settings.

Important! In the event of accidental defrosting, for example the power has been off for longer than the value shown in the technical characteristics chart under “rising time”, the defrosted food must be consumed quickly or cooked immediately and then re-frozen (after cooked).

Thawing

Deep-frozen or frozen food, prior to be used, can be thawed in the fridge compartment or at room temperature, depending on the time available for this operation.
Small pieces may even be cooked still frozen, directly from the freezer. In this case, cooking will take longer.

Accessories

Movable shelves

The walls of the refrigerator are equipped with a series of runners so that the shelves can be positioned as desired.

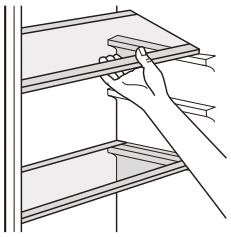

Positioning the door balconies

To permit storage of food packages of various sizes, the door balconies can be placed at different heights. To make these adjustments proceed as follows: gradually pull the balcony in the direction of the arrows until it comes free, then reposition as required.

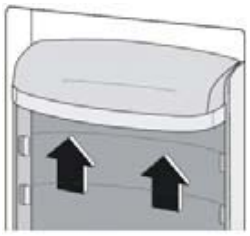

Daily Use

Helpful hints and tips

Hints for freezing

To help you make the most of the freezing process, here are some important hints:
- the maximum quantity of food which can be frozen in 24 hrs. is shown on the rating plate;
- the freezing process takes 24 hours. No further food to be frozen should be added during this period;
- only freeze top quality, fresh and thoroughly cleaned, foodstuffs;
- prepare food in small portions to enable it to be rapidly and completely frozen and to make it possible subsequently to thaw only the quantity required;
- wrap up the food in aluminium foil or polythene and make sure that the packages are airtight;
- do not allow fresh, unfrozen food to touch food which is already frozen, thus avoiding a rise in temperature of the latter;
- lean foods store better and longer than fatty ones; salt reduces the storage life of food;
- water ices, if consumed immediately after removal from the freezer compartment, can possibly cause the skin to be freeze burnt;
- it is advisable to show the freezing in date on each individual pack to enable you to keep tab of the storage time.

Hints for storage of frozen food

To obtain the best performance from this appliance, you should:
make sure that the commercially frozen foodstuffs were adequately stored by the retailer;
be sure that frozen foodstuffs are transferred from the food store to the freezer in the shortest possible time;
Once defrosted, food deteriorates rapidly and cannot be refrozen.
Do not exceed the storage period indicated by the food manufacture.

Hints for fresh food refrigeration

To obtain the best performance:
- Do not store warm food or evaporating liquids in the refrigerator
- Do cover or wrap the food, particularly if it has a strong flavour

Hints for refrigeration

Useful hints:
- Make (all types): wrap in polythene bags and place on the glass shelves above the vegetable drawer.
- For safety, store in this way only one or two days at the most.
- Cooked foods, cold dishes, etc...: these should be covered and may be placed on any shelf.
- Fruit and vegetables: these should be thoroughly cleaned and placed in the special drawer(s) provided.
- butter and cheese: these should be placed in special airtight containers or wrapped in aluminum foil or polythene bags to exclude as much air as possible.
- Milk bottle: these should have a cap and should be stored in the balconies on the door.
- Bananas, potatoes, onions and garlic, if not packed, must not be kept in the fridge.

Daily Use

Cleaning

For hygienic reasons the appliance interior, including interior accessories, should be cleaned regularly.

Caution! The appliance may not be connected to the mains during cleaning. Danger of electrical shock! Before cleaning switch the appliance off and remove the plug from the mains, or switch off or turn out the circuit breaker or fuse. Never clean the appliance with a steam cleaner. Moisture could accumulate in electrical components, danger of electrical shock! Hot vapors can lead to the damage of plastic parts. The appliance must be dry before it is placed back into service.

Important! Ethereal oils and organic solvents can attack plastic parts, e.g. lemon juice or the juice form orange peel, butyric acid, cleanser that contain acetic acid.

- Do not allow such substances to come into contact the appliance parts.
- Do not use any abrasive cleaners
- Remove the food from the freezer. Store them in a cool place, well covered.
- Switch the appliance off and remove the plug from the mains, or switch off or turn out the circuit breaker of fuse.
- Clean the appliance and the interior accessories with a cloth and lukewarm water. After cleaning wipe with fresh water and rub dry.
- After everything is dry place appliance back into service.

Setting the humidity in the Crisper:

- Low humidity: move the regulator to the left
- Hight humidity: move the regulator to the right

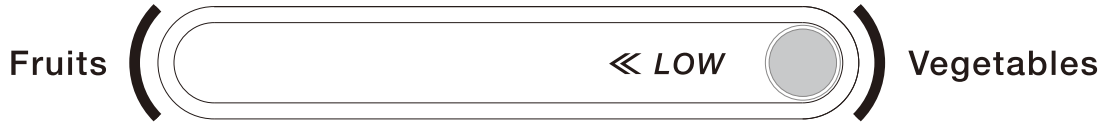

Troubleshooting

Caution! Before troubleshooting, disconnect the power supply. Only a qualified electrician or competent person must do the troubleshooting that is not in this manual.

Important! There will be some sound/noise during normal operation (compressor or refrigerant circulation).

Problem	Possible cause	Solution
Appliance does not work	Mains plug is not plugged in or is loose	Insert mains plug.
	Fuse has blown or is defective	Check fuse, replace if necessary.
	Socket is defective	Mains malfunctions are to be corrected by an electrician.
Appliance freezes or cools too much	Temperature is set too cold	Turn the temperature regulator to a warmer setting temporarily.
The food is not frozen enough.	Temperature is not properly adjusted.	Please look in the initial Temperature Setting section.
	Door was open for an extended period.	Open the door only as long as necessary.
	A large quantity of warm food was placed in the appliance within the last 24 hours.	Turn the temperature regulation to a colder setting temporarily.
	The appliance is near a heat source.	Please look in the installation location section.
Heavy build up of frost on the door seal.	Door seal is not air tight.	Carefully warm the leaking sections of the door seal with a hair dryer (on a cool setting). At the same time shape the warmed door seal by hand such that it sits correctly.
Unusual noises	Appliance is not level.	Re-adjust the feet.
	The appliance is touching the wall or other objects.	Move the appliance slightly.
	A component, e.g. a pipe, on the rear of the appliance is touching another part of the appliance or the wall.	If necessary, carefully bend the component out of the way.

If the malfunction shows again, contact the Service Center.

BELLING PRODUCT WARRANTY

This warranty is provided in Australia by Glen Dimplex Australia Pty Limited ABN 69 118 275 460 of 1340 Ferntree Gully Road, Scoresby, VIC 3179 (Phone number 1300 556 816), or in New Zealand by Glen Dimplex Australasia Ltd, New Zealand registration number 1506305, of 38 Harris Road, East Tamaki, Auckland, New Zealand (Phone number 09 2748265) (we, us our) in respect of the Belling product which this warranty card has been included in the packaging for or otherwise supplied with (**the Belling product**).

1 Belling express warranty

Subject to the exclusions below, we warrant that the Belling product will not have any electrical or mechanical breakdowns within:

(a) in the case of Belling products used for personal, domestic or household purposes, a period of 2 years from the date the Belling product is purchased as a brand new product from a retailer located in Australia or New Zealand; and

(b) in the case of Belling products used for purposes other than personal, domestic or household purposes (including business or commercial use), a period of 90 days from the date the Belling product is purchased as a brand new product from a retailer located in Australia or New Zealand. Belling Products are designed and intended for domestic use.

This express warranty is personal to the first person who acquires the Belling product from the relevant retailer and claims under this warranty cannot be made by anyone other than this person.

The benefits conferred by this express warranty are in addition to the Consumer Guarantees referred to in section 3 and any other statutory rights you may have under the Australian Consumer Law, the New Zealand Consumer Guarantees Act and/or other applicable laws.

2 Warranty exclusions

This express warranty does not apply where:

(a) the Belling product has been installed, used or operated otherwise than in accordance with the product manual or other similar documentation provided to you with the Belling product;

(b) the Belling product requires repairs due to damage resulting from accident, misuse, incorrect installation, improper liquid spillage, cleaning or maintenance, unauthorised modification, use on an incorrect voltage, power surges and dips, voltage supply problems, tampering or unauthorised repairs by any persons, use of defective or incompatible accessories or exposure to abnormally corrosive conditions;

(c) the repair relates to the replacement of consumable parts such as fuses in plugs and bulbs or any other parts of the Belling product which require routine replacement;

(d) you are unable to provide us with reasonable proof of purchase for the Belling product;

(e) the breakdown occurs after the expiry of the express warranty period set out in section 1; or

(f) the Belling product was not purchased in Australia or New Zealand as a brand new product.

3 Consumer Guarantees

Our goods come with guarantees that cannot be excluded under the Australian Consumer Law. You are entitled to a replacement or refund for a major failure and for compensation for any other reasonably foreseeable loss or damage. You are also entitled to have the goods repaired or replaced if the goods fail to be of acceptable quality and the failure does not amount to a major failure.

If you acquired the goods in New Zealand, similar provisions of the Consumer Guarantees Act 1993 may apply, but may be excluded if you acquired the goods for the purpose of a business.

4 How to make a claim

You may make a claim under this warranty by visiting our website (www.glendimplex.com.au in Australia, www.glendimplex.co.nz in New Zealand), contacting our customer care line on 1300 556 816 in Australia, 09 2748265 in New Zealand) or visiting a Glen Dimplex service centre.

To make a valid claim under this warranty, you must:

(a) lodge the claim with us as soon as possible and no later than 14 days after you first become aware of the breakdown;

(b) provide us with the Belling product serial number;

(c) provide us with reasonable proof of purchase for the Belling product; and

(d) if required by us, provide us (or any person nominated by us) with access to the premises at which the Belling product is located at times nominated by us (so that we can inspect the Belling product).

5 Warranty claims

If you make a valid claim under this warranty and none of the exclusions set out in section 2 apply, we will, at our election, either repair the Belling product or replace the Belling product with a product of identical specification (or where the product is superseded or no longer in stock, with a product of as close a specification as possible).

Goods presented for repair may be replaced by refurbished goods of the same type rather than being repaired. Refurbished parts may be used to repair the goods.

Belling products are designed and supplied for normal domestic use. We will not be liable to you under this warranty for business loss or damage of any kind whatsoever.

6 Costs of warranty claim

Where you make a claim under this warranty, a Glen Dimplex authorised repairer may need to attend your premises to inspect the Belling product. For Belling products located in Australia, we may charge you a service call fee if a repairer will be required to travel more than 30 kilometers from the nearest Glen Dimplex service centre to your location. You may obtain details on the location of our service centres and our service call fees by visiting our website (www.glendimplex.com.au in Australia, www.glendimplex.co.nz in New Zealand) or calling our customer care line on (1300 556 816 in Australia, 09 2748265 in New Zealand)