INSIGNIA™

USER GUIDE

10 Cu. Ft. Top Mount Refrigerator

NS-RTM10WH2/NS-RTM10WH2-C/NS-RTM10SS2/NS-RTM10SS2-C

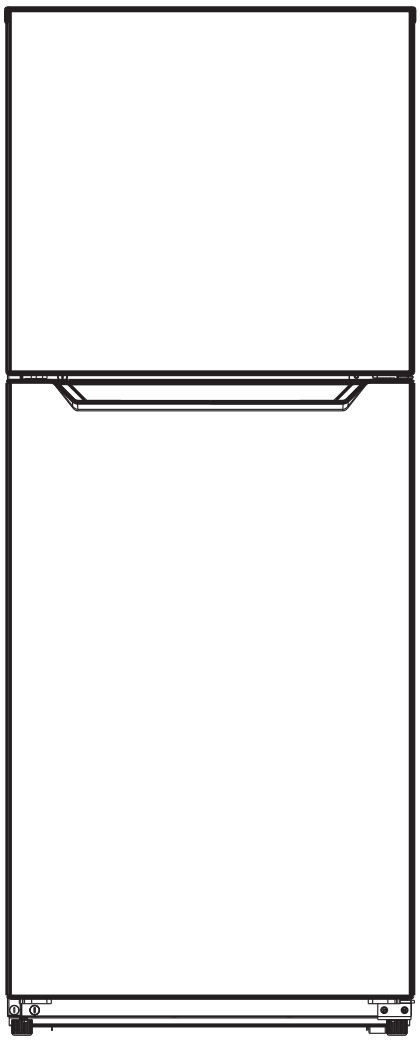

Before using your new product, please read these instructions to prevent any damage.

INSIGNIA™

Contents

Introduction 2
IMPORTANT SAFEGUARDS 3
Grounding requirement 4
Features 5
Package contents 5
Dimensions 5
Exterior 6
Interior 7
Setting up your refrigerator 7
Before using your refrigerator 7
Finding a suitable location 7
Providing correct ventilation 8
Providing the correct power source 9
Leveling your refrigerator 9
Reversing the refrigerator door 10
Using your refrigerator 14
Setting the refrigerator temperature 14
Setting the freezer temperature 14
Setting the humidity in the crisper 15
Adjusting the refrigerator shelves 15
Adjusting the door racks 16
Removing the crisper 16
Maintaining your refrigerator 17
Cleaning your refrigerator 17
Defrosting your refrigerator 17
Shutting down your refrigerator for a long time (several months) 17
Moving your refrigerator 17
Disposing of your refrigerator 17
Tips on saving energy 18
Tips on storing food 18
Tips for shopping for frozen foods 18
Troubleshooting 19
Specifications 20
ONE-YEAR LIMITED WARRANTY 21

Introduction

Congratulations on your purchase of a high-quality Insignia product. Your NS-RTM10WH2, NS-RTM10WH2-C, NS-RTM10SS2, or NS-RTM10SS2-C represents the state of the art in top mount refrigerator design and is designed for reliable and trouble-free performance.

IMPORTANT SAFEGUARDS



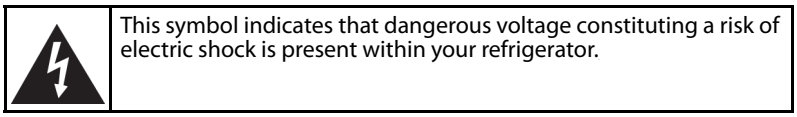

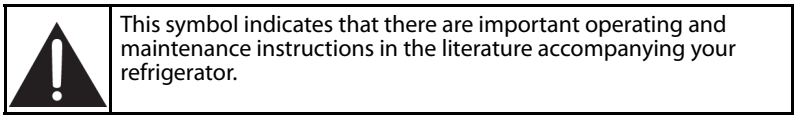

WARNING

1. Read these instructions.
2. Keep these instructions.
3. Heed all warnings.
4. Follow all instructions.
5. Do not use your refrigerator near water.
6. Clean only with a damp cloth.
7. Do not block any ventilation openings. Install in accordance with the manufacturer's instructions.
8. Do not install near any heat sources, such as radiators, heat registers, stoves, or other apparatus (including amplifiers) that produce heat.
9. Do not defeat the safety purpose of the polarized or grounding-type plug. A polarized plug has two blades with one wider than the other. A grounding type plug has two blades and a third grounding prong. The wide blade or the third prong are provided for your safety. If the provided plug does not fit into your outlet, consult an electrician for replacement of the obsolete outlet.
10. Protect the power cord from being walked on or pinched, particularly at plugs, convenience receptacles, and the point where it exits from your refrigerator.
11. Do not attempt to modify or extend the power cord of your refrigerator.
12. Unplug your refrigerator during lightning storms or when it will not be used for long periods of time.
13. Make sure that the available AC power matches the voltage requirements of your refrigerator.
14. Do not handle the plug with wet hands. This could result in an electric shock.
15. Unplug the power cord by holding the plug, never by pulling the cord.
16. Turn off your refrigerator before unplugging it.
17. Refer all servicing to qualified service personnel. Servicing is required when your refrigerator has been damaged in any way, such as the power-supply cord or plug is damaged, liquid has been spilled or objects have fallen into your refrigerator, your refrigerator has been exposed to rain or moisture, does not operate normally, or has been dropped.
18. To reduce the risk of fire or electric shock, do not expose your refrigerator to rain, moisture, dripping, or splashing, and no objects filled with liquids should be placed on top of it.
19. Do not use extension cords or ungrounded (two prong) adapters. If the power cord is too short, have a qualified electrician install an outlet near your refrigerator. Use of an extension cord can negatively affect your refrigerator's performance.
20. Your refrigerator is not intended for use by persons (including children) with reduced physical, sensory, or mental capabilities, or lack of experience and knowledge, unless they have been given supervision or instruction concerning use of your refrigerator by a person responsible for their safety.
21. Children should be supervised to ensure that they do not play with your refrigerator.
22. If the power cord is damaged, it must be replaced by the manufacturer, its service agent, or similarly qualified person, in order to avoid a hazard.

WARNING

Electric Shock Hazard

Failure to follow these instructions can result in electric shock, fire, or death.



1. **WARNING**–Keep ventilation openings, in both your refrigerator and the built-in structure, clear of obstruction.
2. **WARNING**–Do not touch the interior of your refrigerator with wet hands. This could result in frostbite.
3. **WARNING**–Do not use mechanical devices or other means to accelerate the defrosting process, other than those recommended by the manufacturer.
4. **WARNING**–Do not damage the refrigerant circuit.
5. **WARNING**–Do not damage the refrigerant tubing when handling, moving, or using your refrigerator.
6. **WARNING**–**DANGER**—Never allow children to play with, operate, or crawl inside your refrigerator.

   Risk of child entrapment. Before you throw away your old refrigerator:
   - Take off the door.
   - Leave the shelves in place so that children may not easily climb inside.
7. **WARNING**-Do not use electrical appliances inside the food storage compartments of the appliance unless they are of the type recommended by the manufacturer.
8. Unplug your refrigerator before carrying out user maintenance on it.
9. If a component part is damaged, it must be replaced by the manufacturer, its service agent, or similar qualified persons in order to avoid a hazard.
10. Follow local regulations regarding disposal of your refrigerator due to flammable refrigerant and gas. All refrigeration products contain refrigerants, which under the guidelines of federal law must be removed before disposal. It is the consumer's responsibility to comply with federal and local regulations when disposing of this product.
11. Do not store explosive substances such as aerosol cans with a flammable propellant in this appliance.
12. This appliance is intended to be used in household and similar applications such as
    - Staff kitchen areas in shops, offices, and other working environments
    - Farm houses and by clients in hotels, motels, and other residential type environments
    - Bed and breakfast type environments
    - Catering and similar non-retail applications

Grounding requirement

Your refrigerator must be grounded. Your refrigerator is equipped with a cord having a grounding wire with a grounding plug. The plug must be inserted into an outlet that is correctly installed and grounded.

Incorrect use of the grounding plug can result in a risk of electric shock. Consult a qualified electrician or service person if the grounding instructions are not completely understood, or if doubt exists as to whether your refrigerator is correctly grounded.

SAVE THESE INSTRUCTIONS

Features

Package contents

- 10 Cu. Ft. Refrigerator
- Left-Side Upper Hinge Cover
- Lower Left Hinge
- *User Guide*

Dimensions

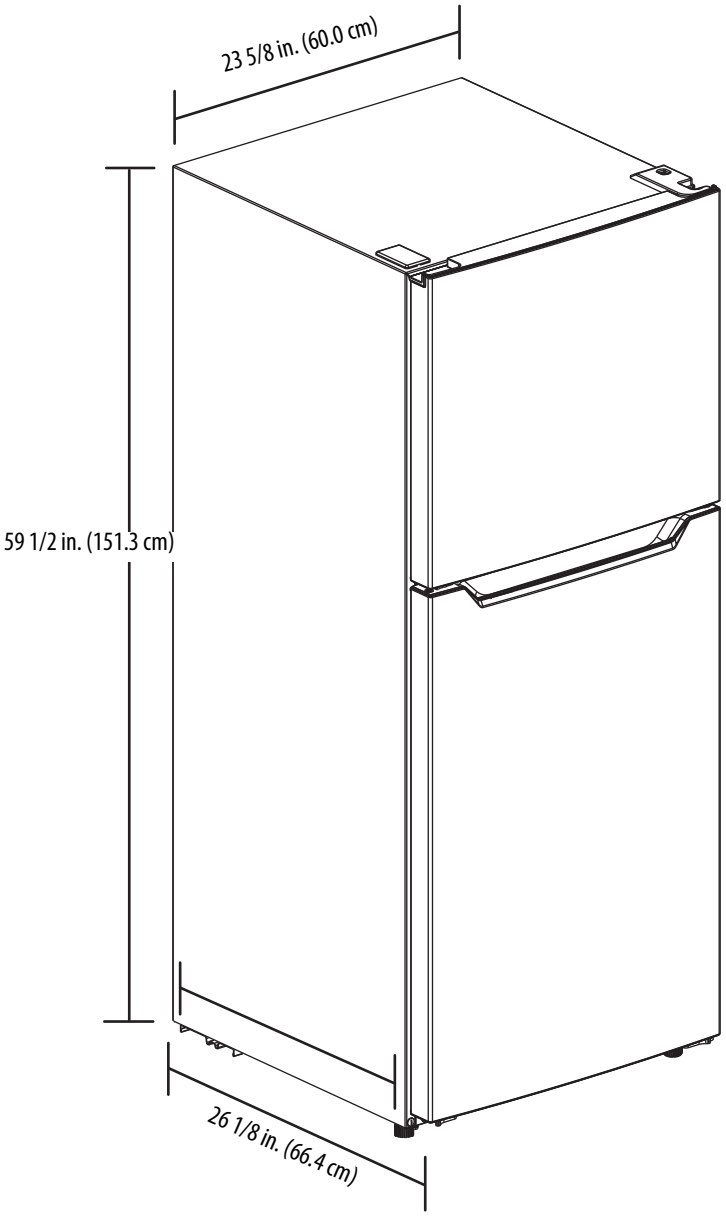

Exterior

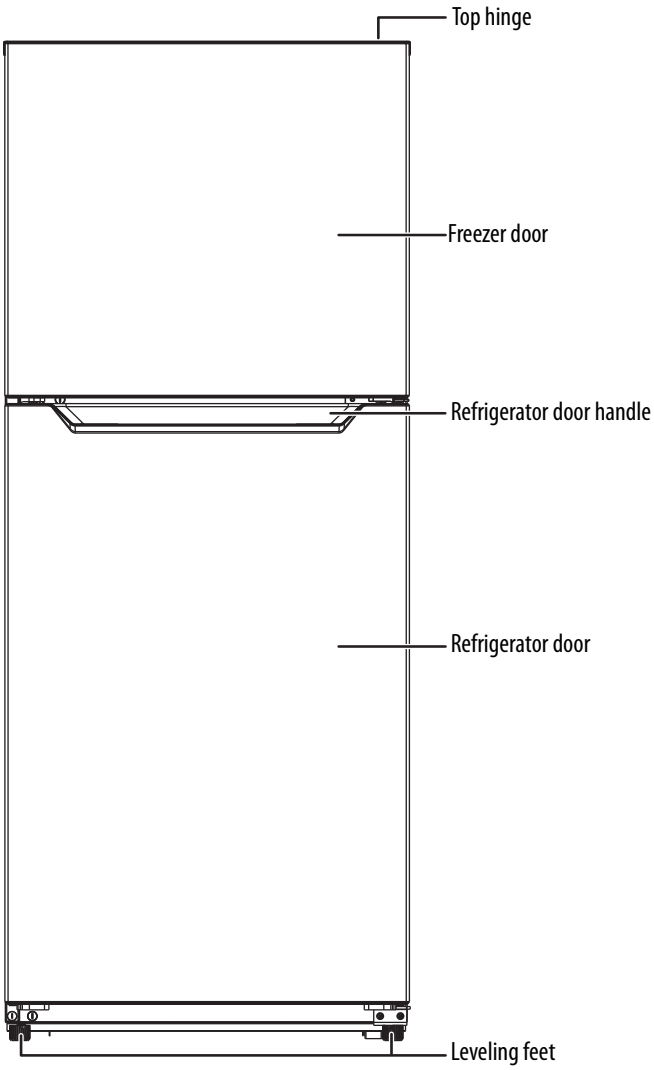
Top hinge
Freezer door
Refrigerator door handle
Refrigerator door
Leveling feet

Interior

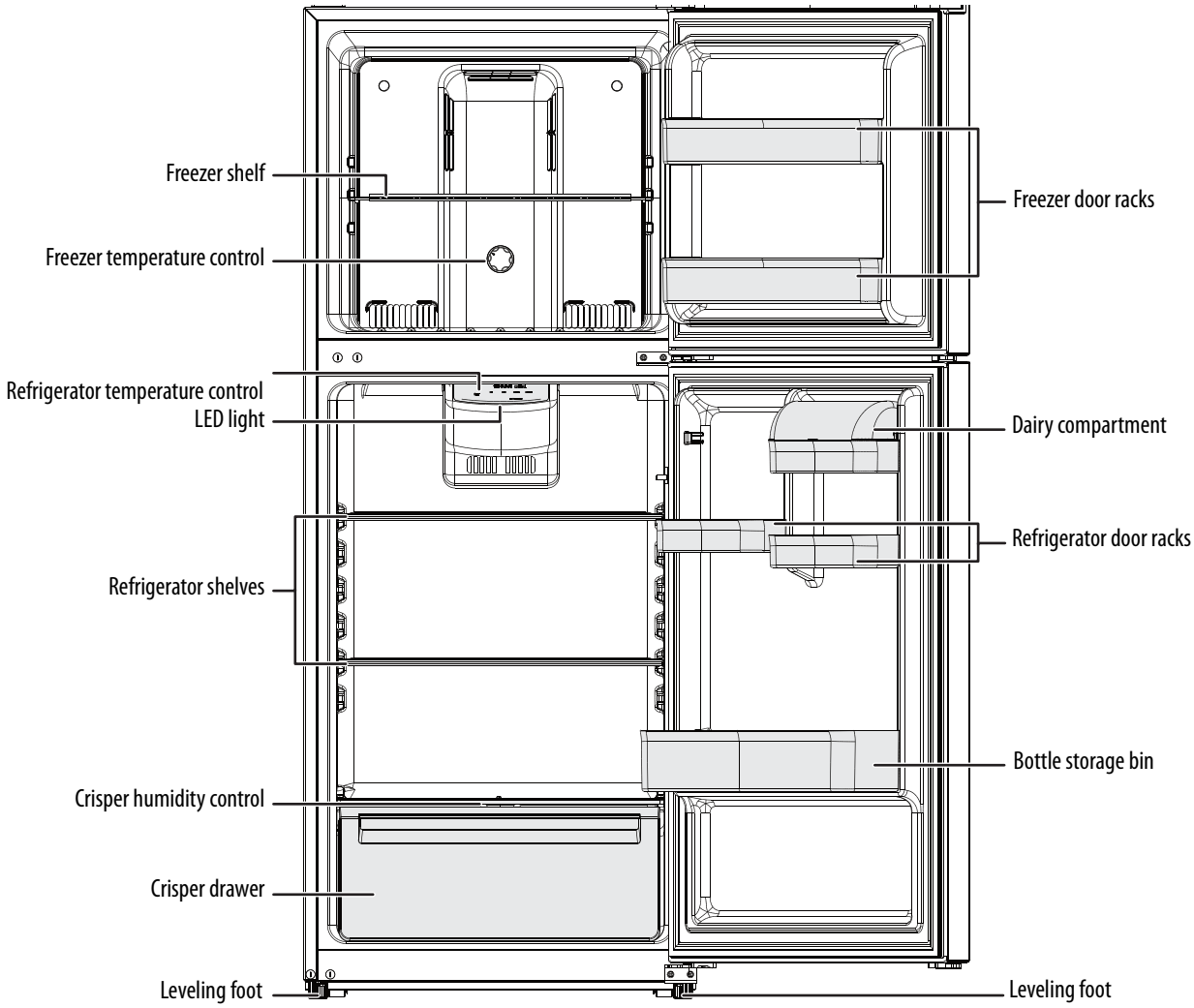

Setting up your refrigerator

CAUTION:
- This refrigerator is heavy (over 116.8 lbs. [53 kg]). We recommend that two people be used to move it.
- Before connecting this refrigerator to a power source, let it stand for approximately six hours to reduce the possibility of a malfunction in the cooling system.

Before using your refrigerator

- Remove the exterior and interior packaging.
- Wash the inside with a damp, warm cloth and a baking soda solution (two tablespoons in a quart [.94 l] of water), then wipe dry with a dry cloth. Do this periodically to keep your refrigerator looking new.
- Level your refrigerator using the leveling feet. If you do not level your refrigerator, the door may not close or seal correctly, causing cooling, frost, and moisture problems. Turn the leveling feet clockwise to raise or counterclockwise to lower a side.

Finding a suitable location

- Place your refrigerator on a floor that is strong enough to support it when fully loaded.
- Do not install your refrigerator on carpeting or a rug.
- Your refrigerator is designed to be free standing and should not be recessed or built-in.
- Do not install your refrigerator in a garage or any other outside installation.
- Adjust the feet to keep your refrigerator level.
- If you locate your refrigerator next to a fixed wall, allow sufficient space on the hinge side for the door to swing open.
- Position your refrigerator away from direct sunlight and sources of heat, such as a stove, heater, or radiator. Direct sunlight may affect the acrylic coating and heat sources may increase electrical consumption. Extremely cold temperatures may also prevent your refrigerator from performing correctly.

- Avoid locating your refrigerator in moist areas.
- Your refrigerator is intended for household use only. It is not designed for outside installation, including anywhere that is not temperature controlled, such as a garage or porch.

Your refrigerator is designed to operate in a temperature range of 50° F (10° C) and 109° F (43° C). If you operate your refrigerator outside this temperature range, your refrigerator may not work correctly.

Providing correct ventilation

Allow at least 2 in. (5 cm) between the left and right sides and top of your refrigerator and surrounding walls and at least 5 in. (12.7 cm) between the back of your refrigerator and the back wall.

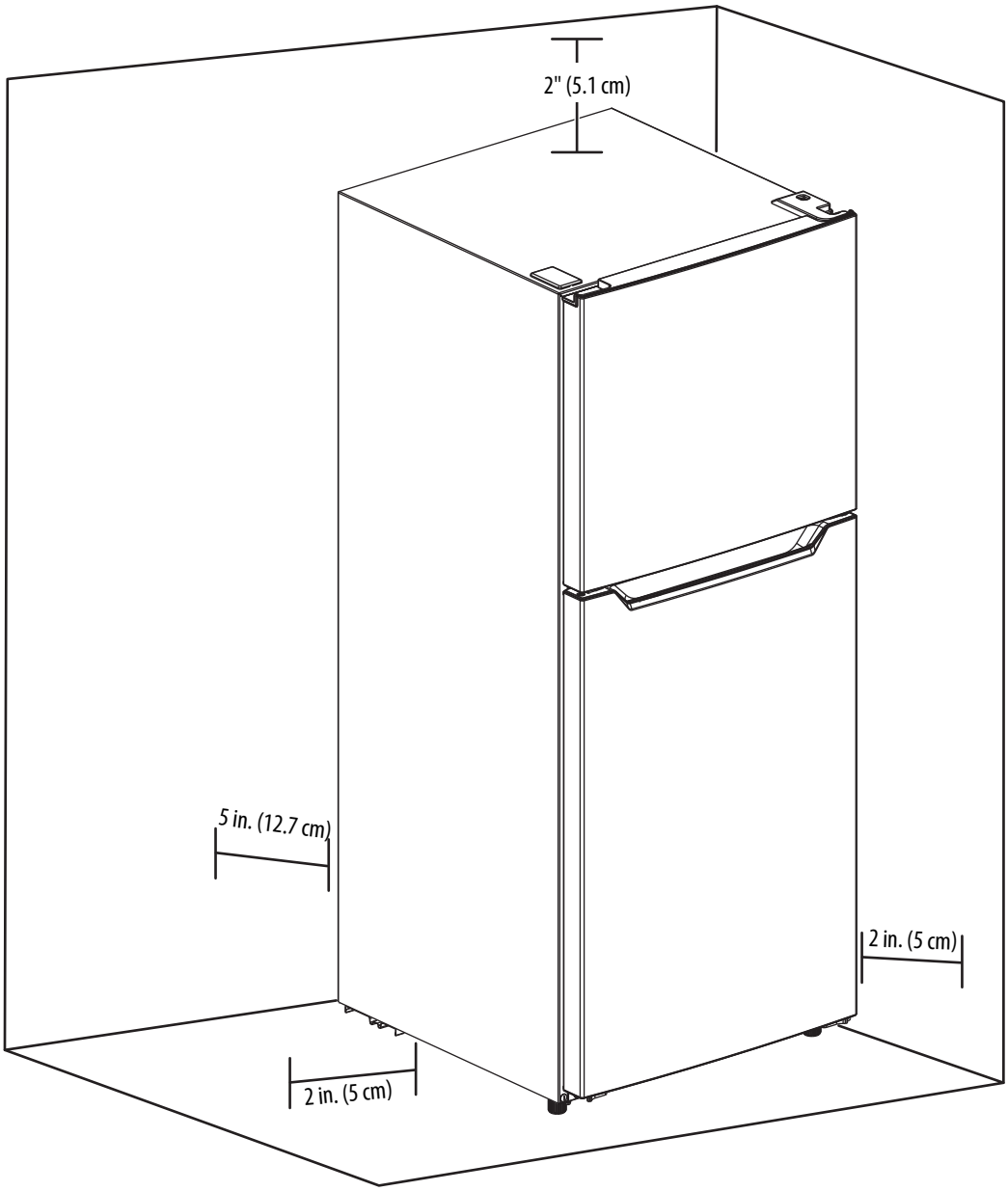

Providing the correct power source

Check your local power source. Your refrigerator requires a 115V, 60Hz power supply.

WARNINGS:
Make sure that:

- The power outlet accepts a 3-prong grounding plug. The third prong on the power cord plug grounds your refrigerator to minimize the possibility of electric shock. Do not modify the power plug.
- You do NOT plug anything else into the same power outlet as your refrigerator. You may overload the circuit which can cause a fire.
- You do NOT use an extension cord. If your refrigerator is too far from the power outlet, move your refrigerator or have a electrician install a plug closer to your refrigerator.
- The power outlet cannot be turned off with a switch or pull string.

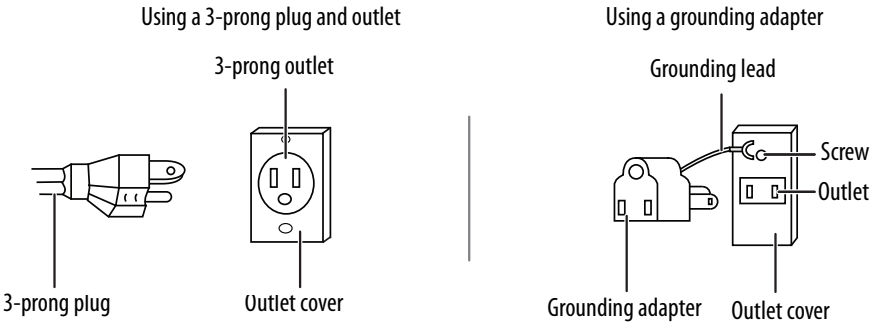

Leveling your refrigerator

Leveling your refrigerator is important. If you do not level your refrigerator during installation, the doors may not close or seal correctly which can cause cooling, frost, or moisture problems.

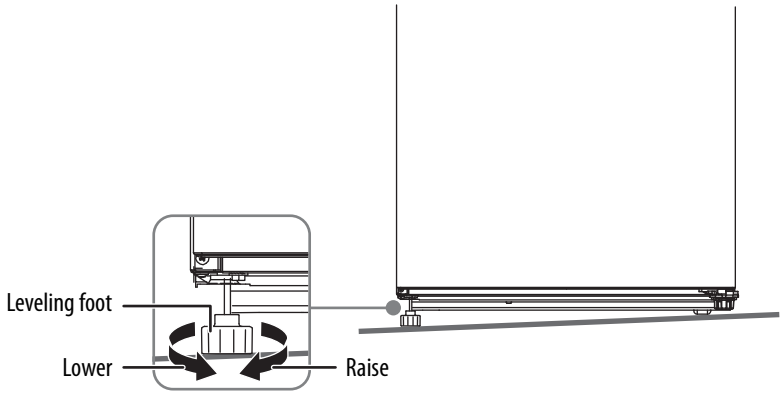

- Rotate the leveling feet clockwise (to raise) your refrigerator or counter-clockwise (to lower).

Note: To make it easier to adjust the feet, have someone push against the top of your refrigerator to tilt it slightly.

Reversing the refrigerator door

CAUTION: If you lay your refrigerator on its back or side for any length of time, wait for six hours after you stand it up again before you plug it in. Otherwise, you may damage internal components.

Determining which version refrigerator you have

Before reversing the door position, check the version of your refrigerator to be sure that you have the parts listed below to proceed with the door reversal. To check your refrigerator version, look at the label on the inside left side of the refrigerator cabinet, if the label says "Rev A." contact Insignia Customer Service at 1-877-467-4289 to receive complimentary parts to complete the door reversal. If the label says “Rev B” or any subsequent model, proceed with the instructions below.

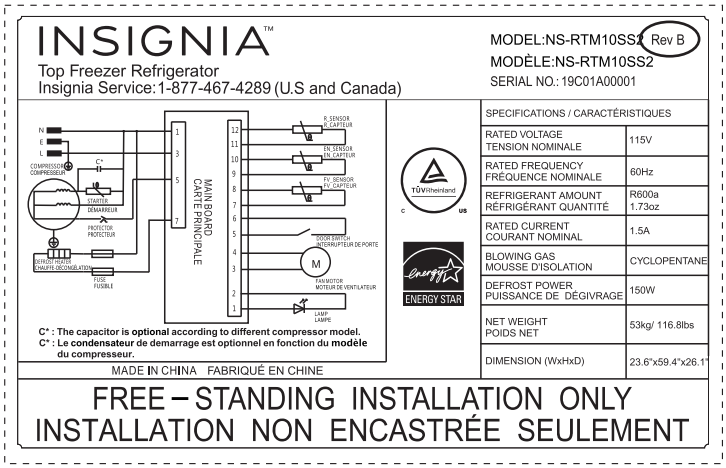

You will need the following tool to reverse the refrigerator door:



Phillips screwdriver

1. Make sure that your refrigerator is unplugged.
2. Remove the screw and the screw hole cover on the top left side of your refrigerator, then remove the screw and hinge cover on the top right side of your refrigerator.
3. Remove the screws that secure the upper hinge to the door, then remove the upper hinge.

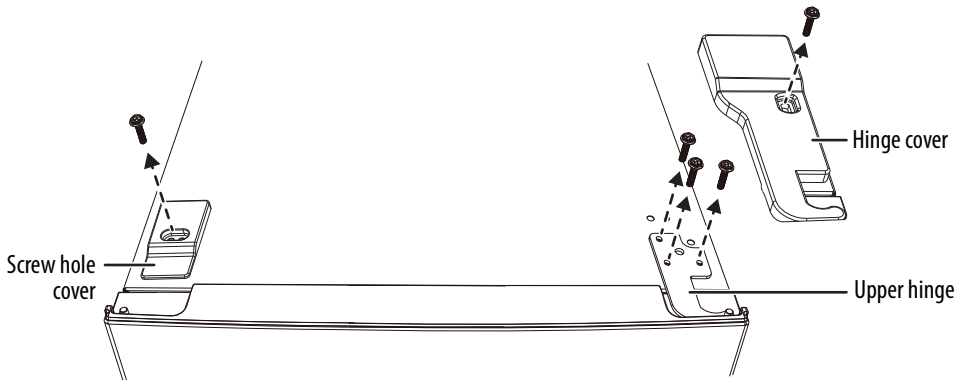

4. Remove the freezer compartment door from the refrigerator by lifting it off the hinge pin.

5 Remove the hinge pin from the upper hinge, then flip the hinge over and install the hinge pin on the other side of the upper hinge.

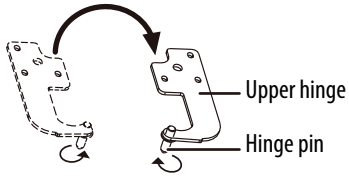

6 Remove the two screws that secure the center hinge to the refrigerator, then remove the center hinge.

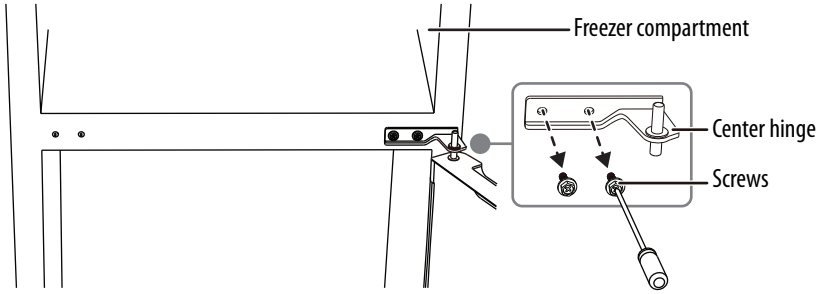

7 Remove the refrigerator compartment door.

8 Move the hinge hole sleeve from the top right side of the refrigerator door to the top left side of the door, then move the hinge hole cover from the top left side of the refrigerator door to the top right side of the door. Set the refrigerator door aside.

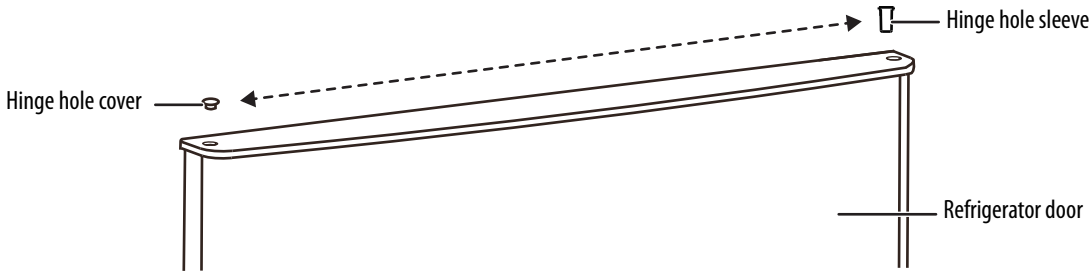

9 Remove the screw hole covers from the center left side of the refrigerator and install them in the center right side of the refrigerator.

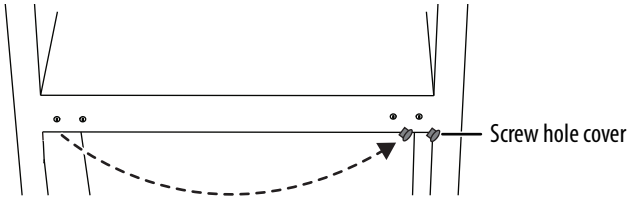

10 Lay the refrigerator on its back and remove both adjustable feet from the bottom of the refrigerator, then remove the production-use screw. This screw is for production use only and is not needed after reversing the door.

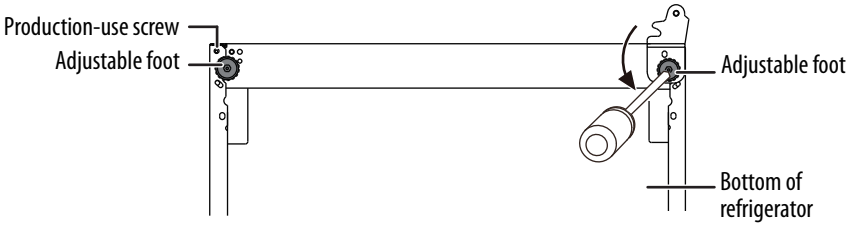

11 Remove the screws that secure the lower hinge to the right side of the refrigerator, then remove the hinge.

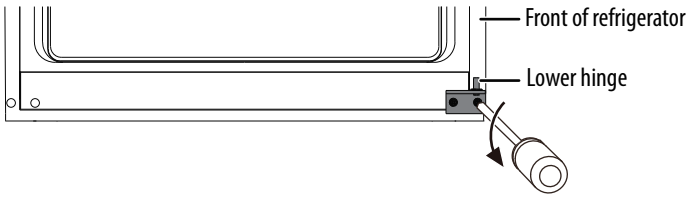

12 Remove the screw hole covers from the bottom left side of the refrigerator and install them in the bottom right side of the refrigerator.

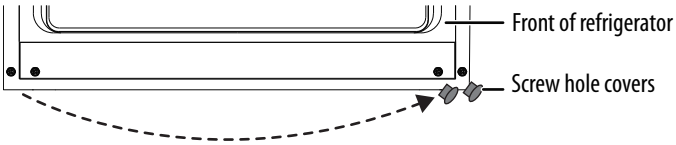

13 If your refrigerator model is Rev.B, or any subsequent model (see Determining which version refrigerator you have on page 10), please follow the instructions below. If your refrigerator model is Rev. A, skip to step 14.

Unscrew and remove the bottom hinge pin, then turn the bracket over and replace the hinge pin.

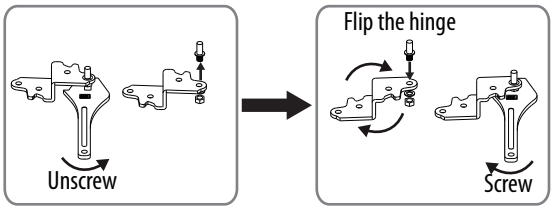

14 Install the lower left hinge on the lower left side of the refrigerator.

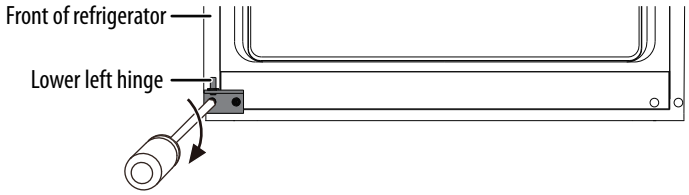

15 Install the adjustable feet on the bottom of the refrigerator, then set the refrigerator upright.

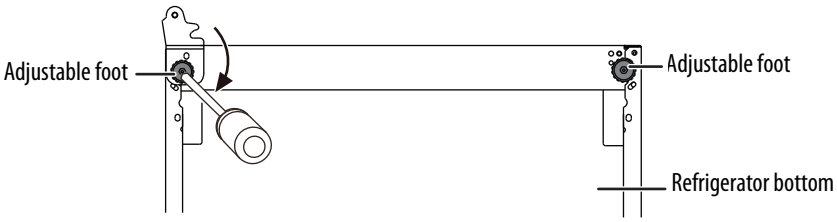

16 Flip the center hinge, then install the refrigerator compartment door. Install the hinge on the center left side of the refrigerator.

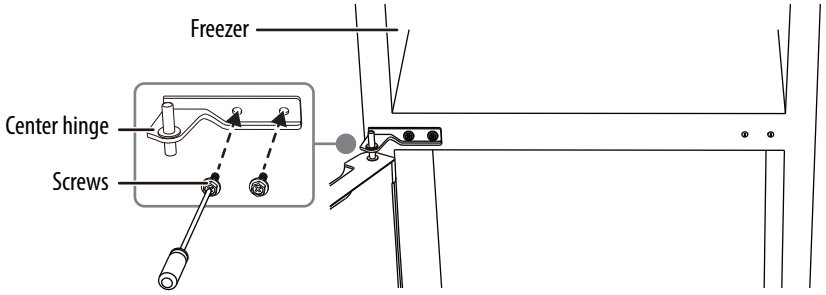

17 Remove the right aid closer and put it in a safe place, then install the left aid closer (found in the accessory bag) on the freezer compartment door.

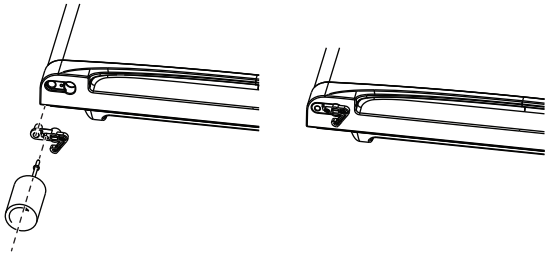

18 Install the freezer compartment door, then install the upper hinge and the left side upper hinge cover (found in accessory bag) on the top left side of the refrigerator.

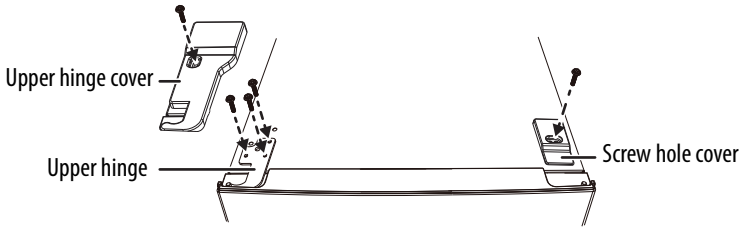

19 Install the screw hole cover on the top right side of the refrigerator.

Using your refrigerator

CAUTIONS:
- If you run your refrigerator in an ambient temperature below 50° F, it may not operate consistently, it may not operate consistently. For example, the freezer temperature may become too warm and the contents may defrost.
- Internal temperatures can vary based on the location of your refrigerator, the ambient room temperature, and how often you open the doors.
- Do not store carbonated drinks in the freezer compartment. They may break and damage your refrigerator.
- Do not exceed the storage times recommended by the food manufacturers for any kind of food.

When you plug in your refrigerator for the first time, the temperature indicator lights for two seconds, then your refrigerator runs at **COLDER** by default.

Before storing foods in your refrigerator, turn on the refrigerator and freezer compartments, then wait for 24 hours to make sure that they are working correctly and to let both compartments reach the correct temperatures.

Setting the refrigerator temperature

- Press the **SET** button one or more times to select a temperature setting (mode). The indicator light for the selected setting turns on and cycles through the settings - **COLDER**>**COLDEST**>**COLD**.

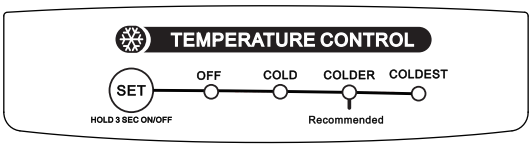

OFF mode

Press and hold the **SET** button for three seconds to set your refrigerator compartment to the **OFF** setting, the refrigerator and freezer compartments both stop cooling. The refrigerator compartment light continues to work.

CAUTION: When you set your refrigerator compartment to the OFF setting, remove all foods in both compartments to avoid spoilage.

Press the **SET** button once to return the refrigerator to normal operation.

Determining the best temperature setting

AMBIENT TEMPERATURE	SUGGESTED SETTINGS
If you leave home for an extended time and want your refrigerator to stop cooling	**OFF**
In winter (lower than 55°F (13°C))	**Refrigerator compartment: COLDER** **Freezer compartment: COLDEST**
Normal (from 56°F to 94°F (13°C to 34°C))	**Refrigerator compartment: COLDER** **Freezer compartment: (recommended setting *)**
In summer (higher than 95°F (35°C))	**Refrigerator compartment: COLDEST** **Freezer compartment: COLDEST**

Setting the freezer temperature

When you plug in your refrigerator for the first time, your freezer runs at two settings above **COLDER** (*) by default. Turn the knob to set the freezer to the desired temperature. As with the refrigerator compartment, consider the ambient temperature when setting the freezer temperature.

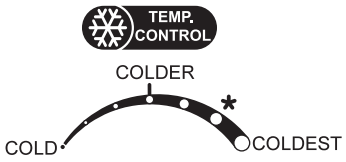

Setting the humidity in the crisper

There is a humidity control gauge on the crisper that can be used to control the level of humidity inside the crisper. The single water drop indicates less humid conditions. The three water drops indicate more humid conditions. Move the slider to change the setting.

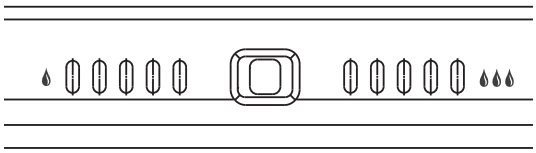

Use the low humidity setting for fruits or vegetables that tend to *rot*. This includes fruits and vegetables that emit an ethylene gas, like apples, avocados, bananas (ripe), cantaloupes, figs, honeydew melons, kiwis, mangoes, papayas, pears, and stone fruits like apricots, nectarines, peaches, and plums.

Things that *wilt* are best kept at the high-humidity setting . This includes leafy greens, like bananas (unripe), Belgian endive, broccoli, Brussels sprouts, cabbage, carrots, cauliflower, cucumbers, eggplant, green beans, herbs (cilantro, dill, parsley, thyme), leafy greens (like kale, lettuces, spinach, Swiss chard, and watercress), okra, peas, peppers, strawberries, summer squash, and watermelon. By closing the humidity control gauge, water vapor is maintained at a higher level in the drawer and the moisture keeps the greens crisper and fresher longer.

Adjusting the refrigerator shelves

The shelves inside the refrigerator and freezer compartments are adjustable.

1. Open the refrigerator or freezer compartment door all the way.
2. Lift a shelf, then pull it out.

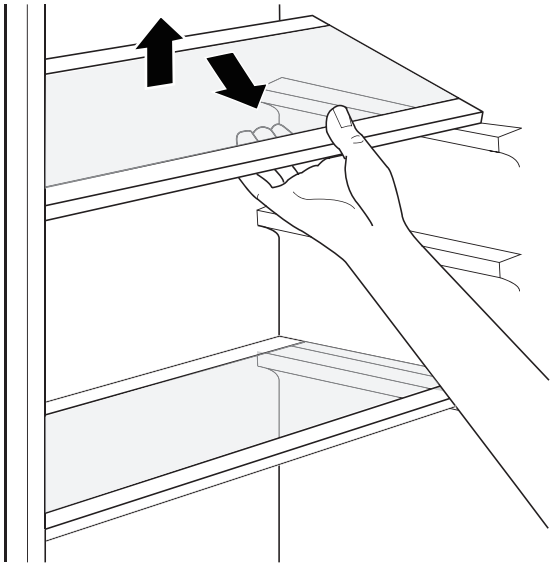

3. To replace a shelf, slide it into the compartment, then lower it into position.

Adjusting the door racks

CAUTION: Do not put too many heavy items in the door racks. You may break the racks.

The refrigerator and freezer compartments have door racks. You can adjust a rack to fit the items you want to store.

1. Remove all items from a rack.
2. Hold the door rack with one hand, then use the other hand to tap the bottom of the rack up several inches.

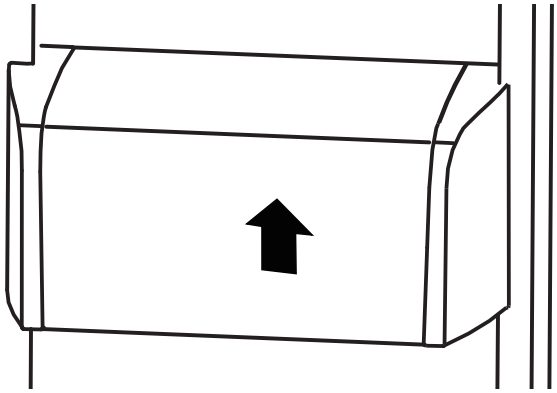

3. Remove the rack from the door.
4. To replace the rack, align the rack in the door, then press down to lock the rack in place. When the rack is locked in place, you hear a click.

Removing the crisper

The crisper is designed to store fruits and vegetables. Putting fruits and vegetables inside the crisper helps avoid losing moisture and prevents flavor from getting into other foods.

1. Open the refrigerator compartment door all the way.
2. Lift the crisper basket with its glass cover up, then pull the crisper out.

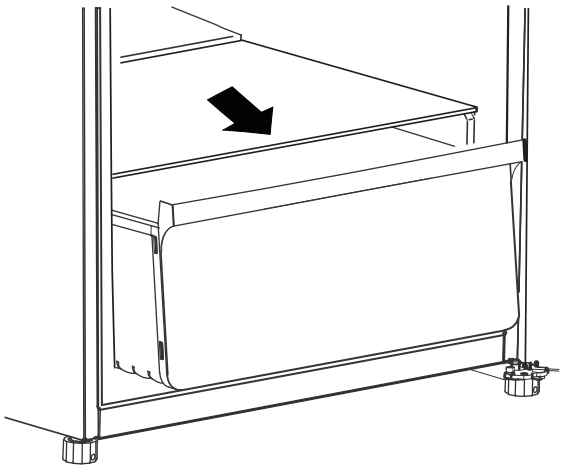

3. To replace the crisper, slide it into the compartment, then lower it into position.

Maintaining your refrigerator

Cleaning your refrigerator

CAUTIONS:
To prevent damage to the finish:
- Do not use gasoline, benzine, thinner, or other similar solvents.
- Do not use abrasive cleaners.
- Do not use sharp objects because they are likely to scratch the surface.

We recommend that you do the following every time you clean your refrigerator to keep it running odor-free and efficiently:

1. Unplug your refrigerator from the power outlet.
2. Remove all food.
3. If you want to remove the door racks, shelves, crisper, freezer shelf, or freezer door racks, see:
   - Adjusting the door racks on page 16
   - Adjusting the refrigerator shelves on page 15
   - Removing the crisper on page 16
4. Clean the doors, handles, and cabinet surfaces with a mild detergent, then rinse with warm water using a wrung-out sponge or cloth.
5. Wash the inside with a damp warm cloth soaked in a solution of one quart (.94 l) of lukewarm water to one tablespoon of baking soda solution, then rinse with warm water using a wrung-out sponge or cloth.
6. Clean the racks, shelves, and drawers with a mild detergent and soft cloth, then rinse with warm water.
7. Make sure that you keep the door gaskets (seals) clean so that the door seals tightly. This helps your refrigerator run efficiently.

CAUTION: Make sure that the door gaskets are completely dry before you plug your refrigerator into the power outlet.

8. Dry all surfaces and removable parts before putting them back into place.
9. Plug your refrigerator into the power outlet.

Defrosting your refrigerator

Your refrigerator is "frost-free" and does not require defrosting.

Shutting down your refrigerator for a long time (several months)

1. Turn off your refrigerator and unplug it from the wall outlet.
2. Remove all food.
3. Clean your refrigerator.
4. Leave the door open slightly to avoid possible formation of condensation, mold, or odor.

CAUTION: Use extreme caution with children. Do not let children play with your refrigerator.

Moving your refrigerator

1. Turn off your refrigerator and unplug it from the wall outlet.
2. Remove all food.
3. Securely tape down all loose items inside your refrigerator.
4. Tape the doors shut.
5. Protect the exterior with moving blankets or pads.
6. Make sure that your refrigerator stays in the upright position during transportation.

Disposing of your refrigerator

This appliance should not be treated as regular household waste. It should be taken to the appropriate waste collection point for recycling of electrical components. For information on where to take it, contact your local waste removal agency or government office.

Tips on saving energy

- Locate your refrigerator in the coolest area of the room, away from heat producing appliances or heating ducts and out of direct sunlight.
- Let hot foods cool to room temperature before placing them in your refrigerator. Overloading your refrigerator forces the compressor to run longer.
- Wrap foods correctly and wipe containers dry before placing them in your refrigerator. This cuts down on frost build-up inside your refrigerator.
- Organize and label food to reduce door openings and extended searches.
- Do not use aluminum foil, wax paper, or paper toweling to line shelves. Liners interfere with cold air circulation and make your refrigerator less efficient.

Tips on storing food

- Always store cooked meats on a refrigerator shelf above raw meats to avoid bacterial transfer. Keep raw meat on a plate which is large enough to collect juices, and cover the plate with cling film or foil. Leave space around food. This allows cold air to circulate around your refrigerator so that all parts of your refrigerator are kept cool.
- To prevent transfer of flavors and food drying out, wrap or cover each food item separately. Fruit and vegetables need not be wrapped.
- Let hot food cool down before placing it in the refrigerator or freezer compartment. Placing hot food in the fridge-freezer could spoil other food and lead to higher temperatures.
- To prevent cold air from escaping, try to limit the number of times you open the doors. When retuning from shopping, sort foods to be kept in the refrigerator compartment before opening the doors. Only open the door to put food in or take it out.
- Do not store food which goes bad easily at low temperature, such as bananas and melons.
- When storing food in the refrigerator compartment, use a container with a lid whenever possible. This prevents moisture from evaporating, and helps food keep its taste and nutrients.
- When storing food in the freezer compartment, wrap the food in polyethylene film, aluminum foil, or other types of freezer storage products
- Do not block air vents inside either compartment with food. Smooth circulation of cold air keeps the refrigerator and freezer temperatures even.
- Do not open the doors frequently. Opening the doors lets warm air enter the compartments and can cause the temperature to rise.
- To adjust the temperature control easily, do not store food near the temperature controls.
- Never keep too many foods in the door rack, because this may stop the door from fully closing.
- Do not store bottles in the freezer compartment. They may break when frozen.
- Do not refreeze food that has been thawed. This causes a loss of taste and nutrition.
- Store fruits and vegetables in the crisper to prevent excessive evaporation of water and freshness.
- Leave a small amount of “air space” when freezing liquids to allow for expansion.
- To make the best use of freezer space, freeze liquids (or solids with liquids, such as stew) in square blocks. Pour the liquid into a freezer bag placed inside a square-sided container and freeze it. When the liquid is frozen, remove the bag from the container and seal the bag.

Tips for shopping for frozen foods

- When you are buying frozen food, look at the storage guidelines on the packaging. Check the “Best Before” date. Do not use food that is past this date.
- Check the temperature of the frozen food cabinet in the shop where you buy your frozen foods.
- Make sure that the frozen food package is in perfect condition.
- Always buy frozen products last to avoid thawing while you shop.
- Keep frozen food together while shopping, and on the journey home to help to keep the food cooler.
- Don't buy frozen food unless you can freeze it quickly.
- When transporting frozen food, use special insulated bags that you can buy from most supermarkets and hardware shops. These keep frozen food cold longer.
- Freeze food in small quantities. It freezes faster and takes less time to thaw.
- If you are freezing large amounts of fresh food, select a low temperature range. This will lower the temperature in the freezer so your food freezes faster. When the food is frozen, adjust the temperature back to its normal mode.

Troubleshooting

CAUTION: Do not try to repair your refrigerator yourself. Doing so invalidates the warranty.

If any temperature indicator lights flash continuously, it indicates a possible malfunction. Unplug the refrigerator for one min and then plug it back in. If the flashing light condition recurs, contact customer service.

PROBLEM	SOLUTION
My refrigerator does not work.	• Make sure that your refrigerator is securely plugged into a working outlet. • Make sure that your power source has the correct voltage. Your refrigerator's voltage rating is on a label on the back of your refrigerator. • Check the house fuse or circuit breaker box and replace the fuse or reset the circuit breaker.
The refrigerator compartment has a bad odor.	• Make sure that all food with a strong odor (like onions) is wrapped or stored in airtight packaging. • Certain containers and wrapping materials (such as paper, foil, or plastic) can cause odors. If you think this might be the case, try using different containers or a different brand of wrapping material. • Check for spoiled food and remove it. • Clean the inside of your refrigerator. See Cleaning your refrigerator on page 17.
The refrigerator doors do not close completely.	• Make sure that no food packages are in the way. • Make sure that the door gaskets (seals) are clean. See Cleaning your refrigerator on page 17. • If the door gasket does not seal, try heating then cooling the seal. You can use an electric hair dryer to heat the seal. • Make sure that your refrigerator is level. See Leveling your refrigerator on page 9.
The temperature is too hot.	• You may have left the doors open too long or opened them too frequently. • Make sure that no obstacle is keeping the doors from closing correctly. • Adjust the refrigerator or freezer compartment temperature. See Setting the refrigerator temperature on page 14 or Setting the humidity in the crisper on page 15. • Your refrigerator may not have enough clearance from walls or the ceiling. See Providing correct ventilation on page 8.
The temperature is too cold.	• Adjust the refrigerator or freezer compartment temperature. See Setting the refrigerator temperature on page 14 or Setting the humidity in the crisper on page 15.
A layer of frost occurs in one of the compartments.	• A layer of frost may occur on the compartment's interior walls if the freezer is opened frequently or kept open too long. • Make sure that the air outlets are not blocked by food. • Make sure that the doors are fully closed.
The refrigerator door is hard to open or close.	• When you open the refrigerator door, warm air rushes inside. When you close the door, the warm air rushes to the condenser which causes a vacuum. This causes the door to be hard to open for about 10 to 15 seconds after closing. • If the door is hard to open at other times, try rubbing paraffin wax or petroleum jelly along the edges of the entire gasket. Paraffin wax is used for canning and is safe for use around food. • If the door is hard to close, try slightly loosening the tension on the door hinges.
The compressor runs for a long time or turns on and off frequently.	The compressor runs longer if: • The room temperature is high. • You just added a large amount of food. Wait for the food to freeze, then check again. • You open and close the door frequently. • The door gasket is dirty. Clean the gasket. See Cleaning your refrigerator on page 17. • Your refrigerator has been disconnected for a period of time. Wait for your refrigerator to cool (about four hours) before adding food. • You have the temperature set too low.

PROBLEM	SOLUTION
The refrigerator makes unusual noises or vibrations.	The following sounds are normal: • Compressor running noises. • Air movement noise from the small fan motor in the freezer compartment or other compartments. • Popping noise during automatic defrosting. • Clicking noise before the compressor starts. Other unusual noises or vibrations may occur: • If you have items on the top of your refrigerator. Remove the items. • If your refrigerator is not level. See Leveling your refrigerator on page 9. • If your refrigerator is touching walls. Move it away from the walls. • If the shelves or drawers are installed incorrectly.
The outside of the refrigerator is hot.	Heat dissipation from the condenser may make the outside feel hot. This is normal and happens if: • The room temperature is high. • You have too much food in your refrigerator. • You open and close the doors excessively.
Water condenses on the outside of the refrigerator.	• Condensation on the exterior surface and door seal is normal when the room humidity is high. • When you open the door, warm, moist outside air meets the cold dry air inside your refrigerator. This is normal.

Specifications

External dimensions (H × W× D)	59 1/2 x 23 5/8 × 261/8 in. (151.3 × 60.0 × 66.4 cm)
Internal dimensions (H × W× D)	**Refrigerator compartment (H × W × D):** 33 1/4 x 19 1/2 x 22 1/4 in. (84.4 x 49.6 x 56.35 cm) **Freezer compartment (H × W × D):** 16 13/16 x 18 1/2 x 16 15/16 in. (42.8 x 47.1 x 42.8 cm) **Refrigerator shelf (W × D):** 19 5/16 x 14 1/4 in. (49.1 x 36.1 cm) **Freezer shelf (W × D):** 18 1/8 x 11 5/16 in. (46 x 28.8 cm) **Crisper (H × W × D):** 19 1/8 x 12 1/2 x 8 in. (48.5 x 31.7 x 20.3 cm) **Depth with open door at 90°:** 48 1/16 in. (122 cm)
Weight	**Gross Weight:** 130.1 lbs. (59 kg) **Net Weight: 116.8 lbs. (53 kg)**
Temperature ranges	**Refrigerator:** 32°F to 45°F (0°C to 7°C) **Freezer:** -7.6° to 10.4° F (-22° to - 12° C)
Power requirements	AC115V~60Hz
Current	1.5A
Defrosting power	150W
Power cord length	5.1 ft. (1.55 m)
Power consumption per year	297 kWh
Certifications	TUV and Energy Star approved

ONE-YEAR LIMITED WARRANTY

Definitions:

The Distributor* of Insignia branded products warrants to you, the original purchaser of this new Insignia-branded product ("Product"), that the Product shall be free of defects in the original manufacturer of the material or workmanship for a period of one (1) year from the date of your purchase of the Product ("Warranty Period").

For this warranty to apply, your Product must be purchased in the United States or Canada from a Best Buy branded retail store or online at www.bestbuy.com or www.bestbuy.ca and is packaged with this warranty statement.

How long does the coverage last?

The Warranty Period lasts for 1 year (365 days) from the date you purchased the Product. Your purchase date is printed on the receipt you received with the Product.

What does this warranty cover?

During the Warranty Period, if the original manufacture of the material or workmanship of the Product is determined to be defective by an authorized Insignia repair center or store personnel, Insignia will (at its sole option): (1) repair the Product with new or rebuilt parts; or (2) replace the Product at no charge with new or rebuilt comparable products or parts. Products and parts replaced under this warranty become the property of Insignia and are not returned to you. If service of Products or parts are required after the Warranty Period expires, you must pay all labor and parts charges. This warranty lasts as long as you own your Insignia Product during the Warranty Period. Warranty coverage terminates if you sell or otherwise transfer the Product.

How to obtain warranty service?

If you purchased the Product at a Best Buy retail store location or from a Best Buy online website (www.bestbuy.com or www.bestbuy.ca), please take your original receipt and the Product to any Best Buy store. Make sure that you place the Product in its original packaging or packaging that provides the same amount of protection as the original packaging.

To obtain warranty service, in the United States and Canada call 1-877-467-4289. Call agents may diagnose and correct the issue over the phone.

Where is the warranty valid?

This warranty is valid only in the United States and Canada at Best Buy branded retail stores or websites to the original purchaser of the product in the country where the original purchase was made.

What does the warranty not cover?

This warranty does not cover:

- Food, beverage, and/or medicine loss/spoilage.
- Customer instruction/education
- Installation
- Set up adjustments
- Cosmetic damage
- Damage due to weather, lightning, and other acts of God, such as power surges
- Accidental damage
- Misuse
- Abuse
- Negligence
- Commercial purposes/use, including but not limited to use in a place of business or in communal areas of a multiple dwelling condominium or apartment complex, or otherwise used in a place of other than a private home.
- Modification of any part of the Product, including the antenna
- Display panel damaged by static (non-moving) images applied for lengthy periods (burn-in).
- Damage due to incorrect operation or maintenance
- Connection to an incorrect voltage or power supply
- Attempted repair by any person not authorized by Insignia to service the Product
- Products sold "as is" or "with all faults"
- Consumables, including but not limited to batteries (i.e. AA, AAA, C etc.)
- Products where the factory applied serial number has been altered or removed
- Loss or Theft of this product or any part of the product
- Display panels containing up to three (3) pixel failures (dots that are dark or incorrectly illuminated) grouped in an area smaller than one tenth (1/10) of the display size or up to five (5) pixel failures throughout the display. (Pixel based displays may contain a limited number of pixels that may not function normally.)
- Failures or Damage caused by any contact including but not limited to liquids, gels or pastes.

REPAIR REPLACEMENT AS PROVIDED UNDER THIS WARRANTY IS YOUR EXCLUSIVE REMEDY FOR BREACH OF WARRANTY. INSIGNIA SHALL NOT BE LIABLE FOR ANY INCIDENTAL OR CONSEQUENTIAL DAMAGES FOR THE BREACH OF ANY EXPRESS OR IMPLIED WARRANTY ON THIS PRODUCT, INCLUDING, BUT NOT LIMITED TO, LOST DATA, LOSS OF USE OF YOUR PRODUCT, LOST BUSINESS OR LOST PROFITS. INSIGNIA PRODUCTS MAKES NO OTHER EXPRESS WARRANTIES WITH RESPECT TO THE PRODUCT, ALL EXPRESS AND IMPLIED WARRANTIES FOR THE PRODUCT, INCLUDING BUT NOT LIMITED TO ANY IMPLIED WARRANTIES OF AND CONDITIONS OF MERCHANTABILITY AND FITNESS FOR A PARTICULAR PURPOSE, ARE LIMITED IN DURATION TO THE WARRANTY PERIOD SET FORTH ABOVE AND NO WARRANTIES, WHETHER EXPRESS OR IMPLIED, WILL APPLY AFTER THE WARRANTY PERIOD. SOME STATES, PROVINCES AND JURISDICTIONS DO NOT ALLOW LIMITATIONS ON HOW LONG AN IMPLIED WARRANTY LASTS, SO THE ABOVE LIMITATION MAY NOT APPLY TO YOU. THIS WARRANTY GIVES YOU SPECIFIC LEGAL RIGHTS, AND YOU MAY ALSO HAVE OTHER RIGHTS, WHICH VARY FROM STATE TO STATE OR PROVINCE TO PROVINCE.

Contact Insignia:

1-877-467-4289

www.insigniaproducts.com

INSIGNIA is a trademark of Best Buy and its affiliated companies.

*Distributed by Best Buy Purchasing, LLC

7601 Penn Ave South, Richfield, MN 55423 U.S.A

©2022 Best Buy. All rights reserved.

INSIGNIA™

For product inquiries, please contact us with the information below:
1-877-467-4289
www.insigniaproducts.com
INSIGNIA is a trademark of Best Buy and its affiliated companies.
Distributed by Best Buy Purchasing, LLC
7601 Penn Ave South, Richfield, MN 55423 U.S.A.
©2022 Best Buy. All rights reserved.

V5 ENGLISH
22-1000