REFRIGERATOR MANUFACTURER

Turbo air

Turbo Air Speeds up the Pace of Innovation

Super Deluxe Series Underbar Equipment Installation and Operation Manual

Please read this manual completely before attempting to install or operate this equipment.

BACK BARS
TBB-1S*-N#
TBB-2S*-N#
TBB-3S*-N#
TBB-4S*-N#

NARROW BACK BARS
TBB-24-48S*-N#
TBB-24-60S*-N#
TBB-24-72S*-N#

BEER DISPENSERS
TBD-1S*-N#
TBD-2S*-N#
TBD-3S*-N#
TBD-4S*-N#

CLUB TOP BEER DISPENSERS
TCB-2S*-N#
TCB-3S*-N#
TCB-4S*-N#



(*) - May or may not have suffix from A to Z to denote cosmetic difference.
(#) - May or may not be followed by a letter indicating refrigerant type.
SD series: Stainless Steel Exterior
SB series: Black Laminated Vinyl Exterior or Black Powder Coating Exterior
SG series: Black Laminated Vinyl Exterior or Black Powder Coating Exterior with Glass Door
TBB series is intended for the storage and display of non-potentially hazardous, bottled or canned products only.

WARNING : This product can expose you to chemicals including Bisphenol A(BPA) and Di(2-ethylhexyl)phthalate(DEHP) and Cobalt sulfate heptahydrate, which are known to the State of California to cause cancer and birth defects or other reproductive harm. For more information go to *www.P65Warnings.ca.gov*

AVERTISSEMENT :
Cancer ET Troubles de l'appareil reproducteur - *www.P65Warnings.ca.gov*

CONTENTS

PAGE

NOTICE 3

FOR HYDROCARBON REFRIGERATION UNITS ..... 4 - 5

IMPORTANT SAFETY INFORMATION

- SAFETY PRECAUTIONS 6
- INSTALLATION & USAGE ..... 7 - 8
- PROPER DISPOSAL OF OLD APPLIANCE 9
- BEFORE YOU CALL FOR SERVICE 9

SPECIFICATIONS 10

SERIAL NUMBER 10

INSTALLATION OF THE CASTERS 11

DRAFT ARMS TOWERS INSTALLATION SCHEMATIC DIAGRAM 12

BEER LINE & CO2 LINE INSTALLATION SCHEMATIC DIAGRAM ..... 13 -14

IMPORTANT CAUTIONS ..... 15 - 16

NOTICE TO CUSTOMER 17

INSTALLATION 17

CLEANING 18

BASIC OPERATION 19

STAINLESS STEEL EQUIPMENT CARE AND CLEANING ..... 20 - 21

TROUBLESHOOTING ..... 22 - 23

WARRANTY INFORMATION ..... 24 - 25

WARRANTY REGISTRATION CARD 27

NOTICE

- This equipment is not intended for use by persons (including children) with reduced physical, sensory or mental capabilities, or lack of experience and knowledge unless they have been given supervision or instructions concerning the use of this equipment and the hazards involved by a person responsible for their safety.
- The special instructions for those persons (including children) with reduced physical, sensory or mental capabilities, or lack of experience and knowledge, are not included in this manual and are not required.
- Children shall not play with the appliance.
- Cleaning and user maintenance shall not be made by children without supervision.

This manual uses the following safety symbols. These safety symbols with the words of **DANGER, WARNING** or **CAUTION** alert users of the potential hazards that could cause injury or even death.

⚠ **DANGER**	Indicates hazards of death or serious injury, if the instructions are not followed.
⚠ **WARNING**	Indicates dangers of death or serious injury, if the instructions are not followed.
⚠ **CAUTION**	Indicates risks of personal injury or material damage, if the instructions are not followed.

FOR HYDROCARBON REFRIGERATION UNITS

⚠ WARNING

This unit uses R-290 (propane), or R-600a (isobutane) as a refrigerant. These hydrocarbon refrigerants are highly environmentally compatible but also are flammable and combustible. Please read this manual thoroughly before installing and operating the unit. Please take cautious measures to avoid risk of fire or explosion.

PLEASE REFER TO THE LABEL INSIDE THE CABINET TO CHECK REFRIGERATION TYPE AND VOLUME.

	**DANGER -** Risk of fire or explosion. Flammable refrigerant used. Do not use mechanical devices to defrost refrigerator. Do not puncture refrigerant tubing.
	**DANGER -** Risk of fire or explosion. Flammable refrigerant used. To be repaired only by trained service personnel. Do not puncture refrigerant tubing.
	**CAUTION -** Risk of fire or explosion. Dispose of properly in accordance with federal or local regulations. Flammable refrigerant used.
	**CAUTION -** Risk of fire or explosion. Flammable refrigerant used. Consult repair manual/owner's guide before attempting to service this product. All safety precautions must be followed
	**CAUTION -** Risk of fire or explosion due to puncture of refrigerant tubing; follow handling instructions carefully. Flammable refrigerant used.
	**WARNING** - Keep ventilation opening in the appliance enclosure or in the built-in structure, clear of obstruction. - Do not use mechanical devices or other means to accelerate the defrosting process, other than those recommended by the manufacturer. - Do not damage the refrigerant circuit. - Do not use electrical appliances inside the food storage compartments of the appliance, unless they are of a type recommended by the manufacturer.

FOR HYDROCARBON REFRIGERATION UNITS

⚠ WARNING

- Handle the unit with care in order to avoid any serious damages to the refrigeration system.

- The refrigerant tubing, condenser, evaporator coils are easily prone to damage while handling, moving, installing, and cleaning the unit, which may lead to fire or even explosion.

- Refrigerant squirting out of the pipes could ignite or cause an eye injury. If a leak is detected, avoid any open flames or potential sources of ignition and air out the room in which the appliance is standing for several minutes.

- In order to avoid the creation of a flammable gas-air mixture in case of a leak in the refrigerating circuit, the size of the room in which the appliance is placed depends on the amount of refrigerant used. The room must be 35.31ft^3 (1m^3) in size for every 0.28oz (8g) of R-600a refrigerant inside the appliance. The amount of refrigerant in your particular appliance is shown on the label inside the cabinet.



This appliance contains a small amount of propane (R-290) or isobutane (R-600a) refrigerant, a natural gas with high environmental compatibility, but it is also combustible. When transporting and installing the appliance, care should be taken to ensure that no part of the refrigerating circuit are damaged.

- Never start up an appliance showing any signs of damage. When in doubt, contact a qualified service professional.

- In case of any hazardous activities such as fire or explosion, move the unit away from any source of ignition to a well ventilated area.

- Further service and repair must be done by a qualified technician who is familiar with the safety standards, and also has thorough understanding and knowledge of the flammable refrigerants.

- Any and all technicians handling these units must be equipped with proper personal protection and equipment and follow applicable safety measures and precaution to avoid risk of fire or explosion.

IMPORTANT SAFETY INFORMATION

SAFETY PRECAUTIONS

To avoid any risk of fire, explosion, electric shock, personal injury, material damage or incorrect use of the appliance, be sure to observe the following safety precautions. (After reading these owner's manual instructions, please keep the manual booklet in a safe place for reference. Remember to hand it over to any subsequent owners)

⚠ WARNING

- The unit must be installed and located in accordance with the manufacturer's installation instructions.
- Installation work must be performed in accordance with the National Electric Code by qualified and authorized personnel only.
- Repairs and replacement work must be performed by a qualified and authorized service professionals only using genuine replacement part.
- Do not use an extension cord or an adapter plug. Because of the potential safety hazards under certain conditions, we strongly disrecommend any use of an extension cord or an adapter plug.
- Do not, under any circumstances, cut or remove the ground prong from the power cord. For personal safety, this appliance must be properly grounded.
- Do not store volatile and flammable substances in the refrigerator. The storage of benzene, thinner, alcohol, ether, LP gas, or other explosive substances may cause an explosion.
- Do not store or use gasoline or other flammable vapors and liquids in the vicinity of this appliance as well as any other appliances.
- The appliance is not intended for use by children without supervision.
- Do not allow children to climb, stand, or hang on the refrigerator doors or shelves in the refrigerators. They could damage the refrigerator and seriously injure themselves.
- To prevent suffocation and entrapment hazards of children, remove the doors and seals from the refrigerator before disposing of it or discontinuing its use.

IMPORTANT SAFETY INFORMATION

INSTALLATION & USAGE

⚠ WARNING

- Do not install the unit in a damp place where it could be splashed with water. Incorrect insulation of the electrical parts may cause fire or electric shock.
- Do not plug several appliances into the same sockets. This could cause overheating and risk start of a fire.
- Keep the power plug away from the rear of the cabinet. A damaged power plug may cause fire due to overheating.
- Do not spray water directly to the interior or exterior of the appliance. There is a risk of fire or electric shock.
- Do not place any containers filled with water on top of the appliance. If the water spills onto any electrical parts, it may lead to fire or electric shock.
- Do not attempt to repair, disassemble or alter the appliance. It may cause fire or abnormal operations which may lead to injury.
- Unplug the refrigerator before making repairs, replacing a light bulb, or cleaning.
- Plug into a grounded 3-prong outlet. Do not remove the ground prong.

⚠ CAUTION

- Do not store too much food in the appliance. When you open the door, an item may fall out and cause personal injury or material damage.
- Do not put bottles or any kind of glass in the freezer. The container may break and cause personal injury.
- Do not disconnect the power cord by pulling on it. This may disconnect a wire and cause a short circuit.

INSTALLATION & USAGE

⚠ CAUTION

- There is a risk of death from suffocation if a child puts the packing materials on his or her head.

- Do not store any articles on top of the appliance. Articles may fall while opening or closing the door, and could cause personal injury or material damage.

- Do not store pharmaceutical products, scientific materials or other temperature-sensitive products in the refrigerator. Products that require strict temperature controls must not be stored in the refrigerator.

- Do not let children hang on the door.

- Do not touch any cold surfaces or food containers in the freezer with damp or wet hands. Skin may stick to these extremely cold surfaces and may cause frostbite.

- Remove any foreign matter from the power plug pins. Otherwise, there is a risk of fire.

- Do not insert your hand into the bottom area of appliance. Any sharp edges may cause personal injury.

- After unplugging the appliance, wait at least five minutes before plugging it back in. Abnormal operation of the freezer may cause material damage.

- If the appliance is not used for a long period of time, unplug it from the power supply. Any deterioration in the insulation may cause fire.

- Do not let children touch or play with the control panel on the front of the appliance.
  - Do not allow children to play with this appliance.
  - Do not stand or lean on the base panel, pull-out parts, or doors.
  - Repairs and maintenance of the appliance should only be performed by a qualified technician. Incorrect repairs done by an unqualified person may be a potential source of danger that could have critical consequences for the user of the appliance.
  - Never put ice cubes or ice lollies straight from the freezer into your mouth. The low temperature may cause cold burns.

PROPER DISPOSAL OF OLD APPLIANCE

For environmental purpose, refrigeration appliances must be disposed of properly. This applies to your old appliance, and at the end of its service life, for your new appliance as well.

⚠ WARNING

Before disposing of old appliances, make them inoperable. Remove plug from mains, severe the power cable, and remove or destroy any snap or latch closures.

This eliminates the danger of any children locking themselves into the appliance (danger of suffocation) or placing themselves into other life-threatening situations.

- The appliance may not be disposed of with domestic waste or bulky refuse.
- The refrigerant circuit, especially the heat exchanger at the back of the appliance, may not be damaged.
- Information concerning collection schedules or locations can be obtained from the local disposal authorities.

⚠ CAUTION

The refrigeration used in refrigerator/freezer and the gases in the insulation material requires special disposal procedures. Ensure that none of the pipes on the back of the appliance are damaged prior to disposal.

BEFORE YOU CALL FOR SERVICE

Before contacting our Service Department, review the detailed troubleshooting tips in the Owner's manual.

1. Try to remedy the problem. Please read the "Troubleshooting Guide" section first and you may not need to call for service.
2. Restart the appliance to check whether the fault repeats. If the malfunction persists, switch off the appliance and try again after an hour.
3. If the malfunction still persists, then contact our Customer Service, specifying:
   - The nature of the problem,
   - The appliance model number and serial number
   - Your full address, telephone number and area code.

SPECIFICATIONS

Model	Rating Temp. (℉)	Operating Temp. (℉)	Equipment Class Designation	V/Hz	Refrigerant	AMPS
TBB-1SB-N#	38(M)	≥32	VCS, SC, M	(110-120) V~, 60Hz	R-600a / 1.59 oz (45 g)	1.3 A
TBB-2SB-N#	38(M)	≥32	VCS, SC, M	(110-120) V~, 60Hz	R-600a / 2.29 oz (65 g)	1.7 A
TBB-3SB-N#	38(M)	≥32	VCS, SC, M	(110-120) V~, 60Hz	R-600a / 2.29 oz (65 g)	1.9 A
TBB-4SB-N#	38(M)	≥32	VCS, SC, M	(110-120) V~, 60Hz	R-290 / 3.35 oz (95 g)	2.9 A
TBB-2SG-N#	38(M)	≥32	VCT, SC, M	(110-120) V~, 60Hz	R-290 / 2.82 oz (80 g)	2.8 A
TBB-3SG-N#	38(M)	≥32	VCT, SC, M	(110-120) V~, 60Hz	R-290 / 3.17 oz (90 g)	2.8 A
TBB-4SG-N#	38(M)	≥32	VCT, SC, M	(110-120) V~, 60Hz	R-290 / 3.35 oz (95 g)	3.3 A
TBB-24-48SB-N#	38(M)	≥32	VCS, SC, M	(110-120) V~, 60Hz	R-600a / 2.65 oz (75 g)	1.8 A
TBB-24-60SB-N#	38(M)	≥32	VCS, SC, M	(110-120) V~, 60Hz	R-600a / 2.65 oz (75 g)	2.0 A
TBB-24-72SB-N#	38(M)	≥32	VCS, SC, M	(110-120) V~, 60Hz	R-600a / 2.82 oz (80 g)	2.0 A
TBB-24-48SG-N#	38(M)	≥32	VCT, SC, M	(110-120) V~, 60Hz	R-290 / 3.00 oz (85 g)	2.6 A
TBB-24-60SG-N#	38(M)	≥32	VCT, SC, M	(110-120) V~, 60Hz	R-290 / 3.17 oz (90 g)	2.9 A
TBB-24-72SG-N#	38(M)	≥32	VCT, SC, M	(110-120) V~, 60Hz	R-290 / 3.17 oz (90 g)	2.9 A
TBD-1S*-N#	38(M)	≥32	VCS, SC, M	(110-120) V~, 60Hz	R-600a / 1.59 oz (45 g)	1.1 A
TBD-2S*-N#	38(M)	≥32	VCS, SC, M	(110-120) V~, 60Hz	R-600a / 2.47 oz (70 g)	1.9 A
TBD-3S*-N#	38(M)	≥32	VCS, SC, M	(110-120) V~, 60Hz	R-290 / 2.65 oz (75 g)	2.5 A
TBD-4S*-N#	38(M)	≥32	VCS, SC, M	(110-120) V~, 60Hz	R-290 / 3.00 oz (85 g)	2.7 A
TCB-2S*-N#	38(M)	≥32	VCS, SC, M	(110-120) V~, 60Hz	R-600a / 2.47 oz (70 g)	1.3 A
TCB-3S*-N#	38(M)	≥32	VCS, SC, M	(110-120) V~, 60Hz	R-600a / 2.47 oz (70 g)	2.3 A
TCB-4S*-N#	38(M)	≥32	VCS, SC, M	(110-120) V~, 60Hz	R-290 / 3.00 oz (85 g)	2.6 A

VCT : VERTICAL CLOSED TRANSPARENT
VCS : VERTICAL CLOSED SOLID
HCT : HORIZONTAL CLOSED TRANSPARENT
HCS : HORIZONTAL CLOSED SOLID
SC : SELF-CONTAINED
M : MEDIUM TEMPERATURE APPLICATION
L : LOW TEMPERATURE APPLICATION

SERIAL NUMBER

The serial number is located on the data label inside the cabinet.

Please retain the unit's serial number for service purpose.

INSTALLATION OF THE CASTERS

The assembly position of the casters is as noted in the diagrams below.
Number of casters included differ according to each specific model.

TBD-1S*-N#
TBB-1S*-N#

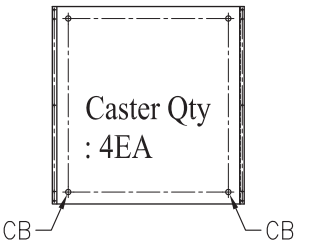

TBB-2S*-N#
TBB-24-48S*-N#
TBD-2S*-N#
TCB-2S*-N#

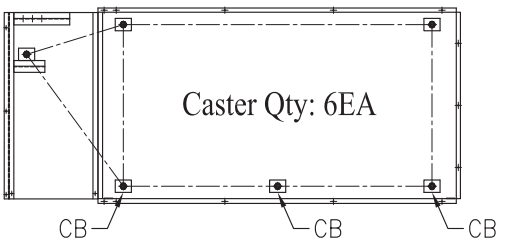

TBB-3S*-N#,
TBB-4S*-N#
TBB-24-60S*-N#,
TBB-24-72S*-N#
TBD-3S*-N#,
TBD-4S*-N#
TCB-3S*-N#
TCB-4S*-N#

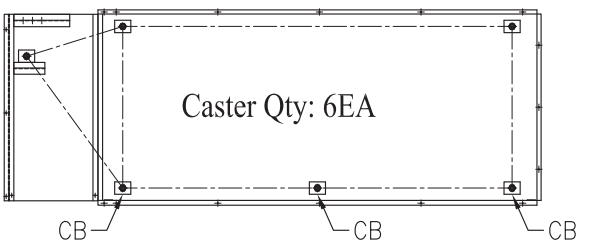

* This picture is a plan view of bottom cabinets.
CB is an abbreviation of the Caster with a Brake.
Other casters don't have a brake.

DRAFT ARMS TOWERS INSTALLATION SCHEMATIC DIAGRAM

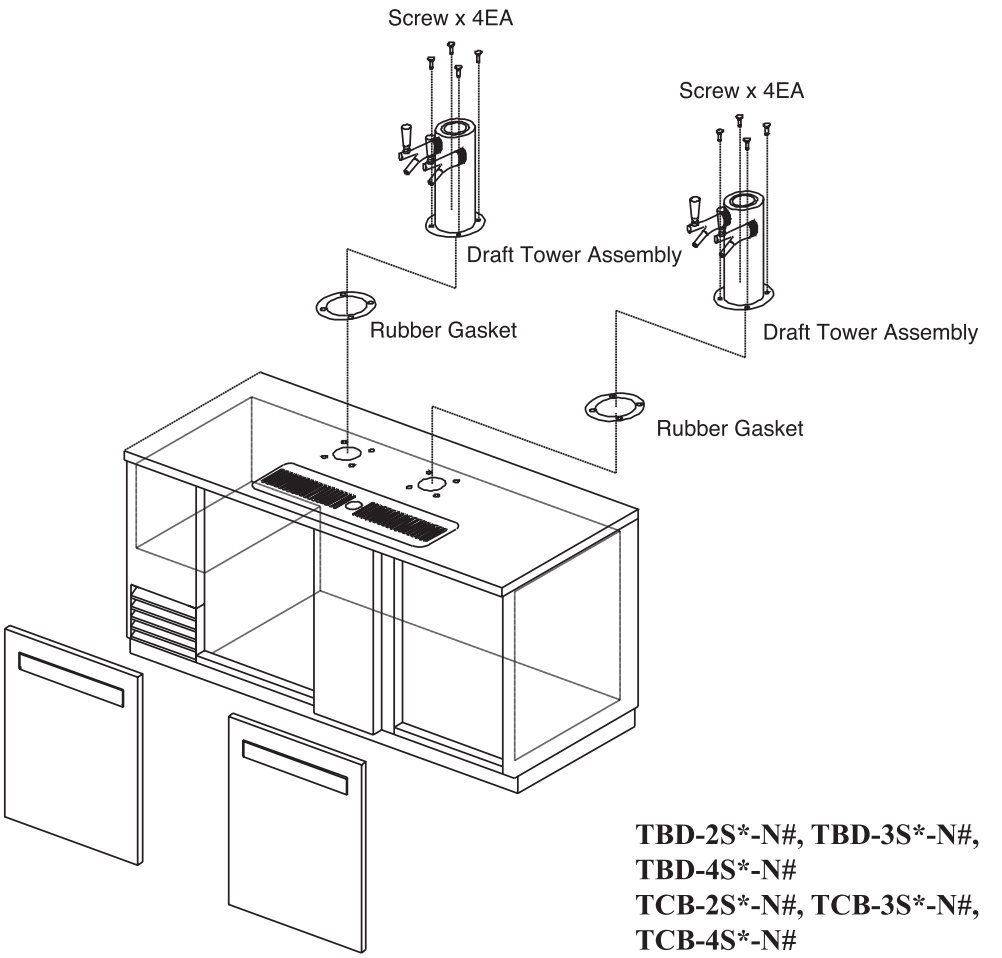

TBD-2S*-N#, TBD-3S*-N#,
TBD-4S*-N#
TCB-2S*-N#, TCB-3S*-N#,
TCB-4S*-N#

* Assemble DRAFT TOWER as indicated in the above diagram.

BEER LINE & CO2 LINE INSTALLATION SCHEMATIC DIAGRAM

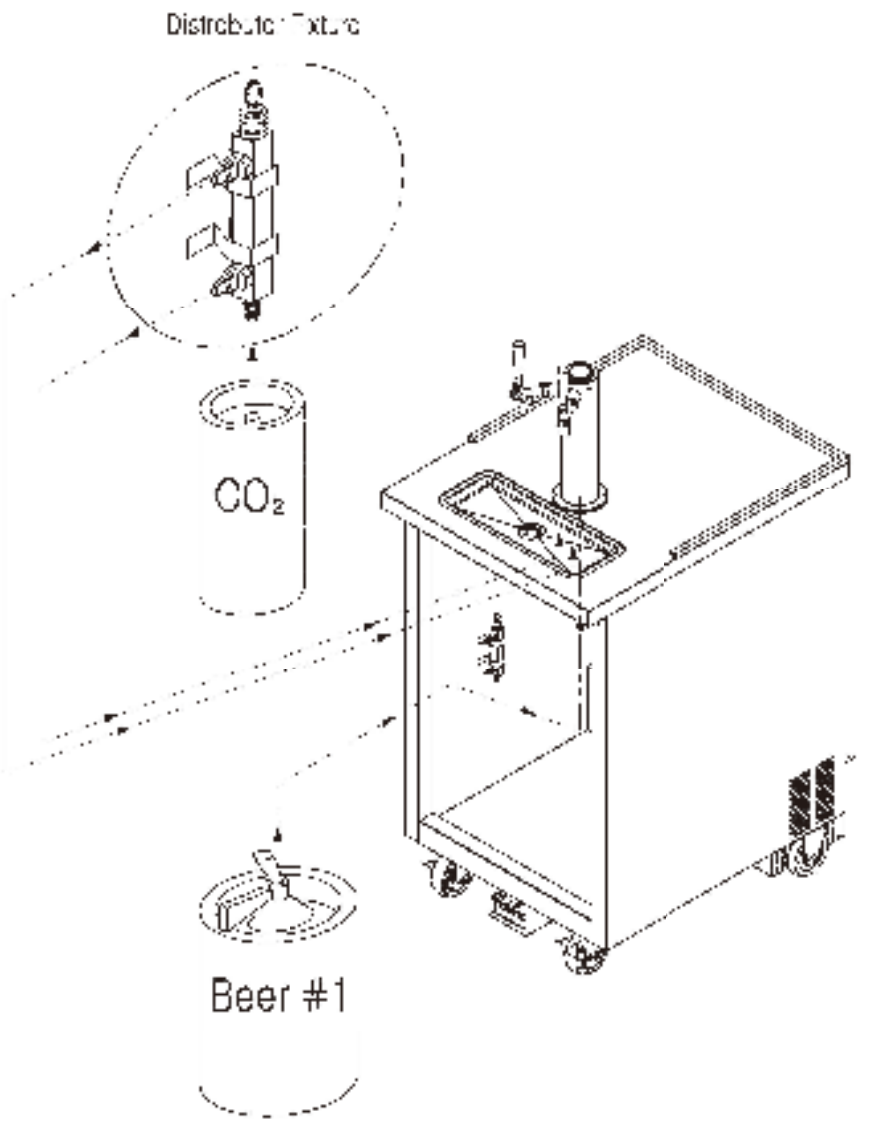

TBD-1S*-N#

* Assemble BEER LINE & CO2 LINE as indicated in the above diagram.

BEER LINE & CO2 LINE INSTALLATION SCHEMATIC DIAGRAM

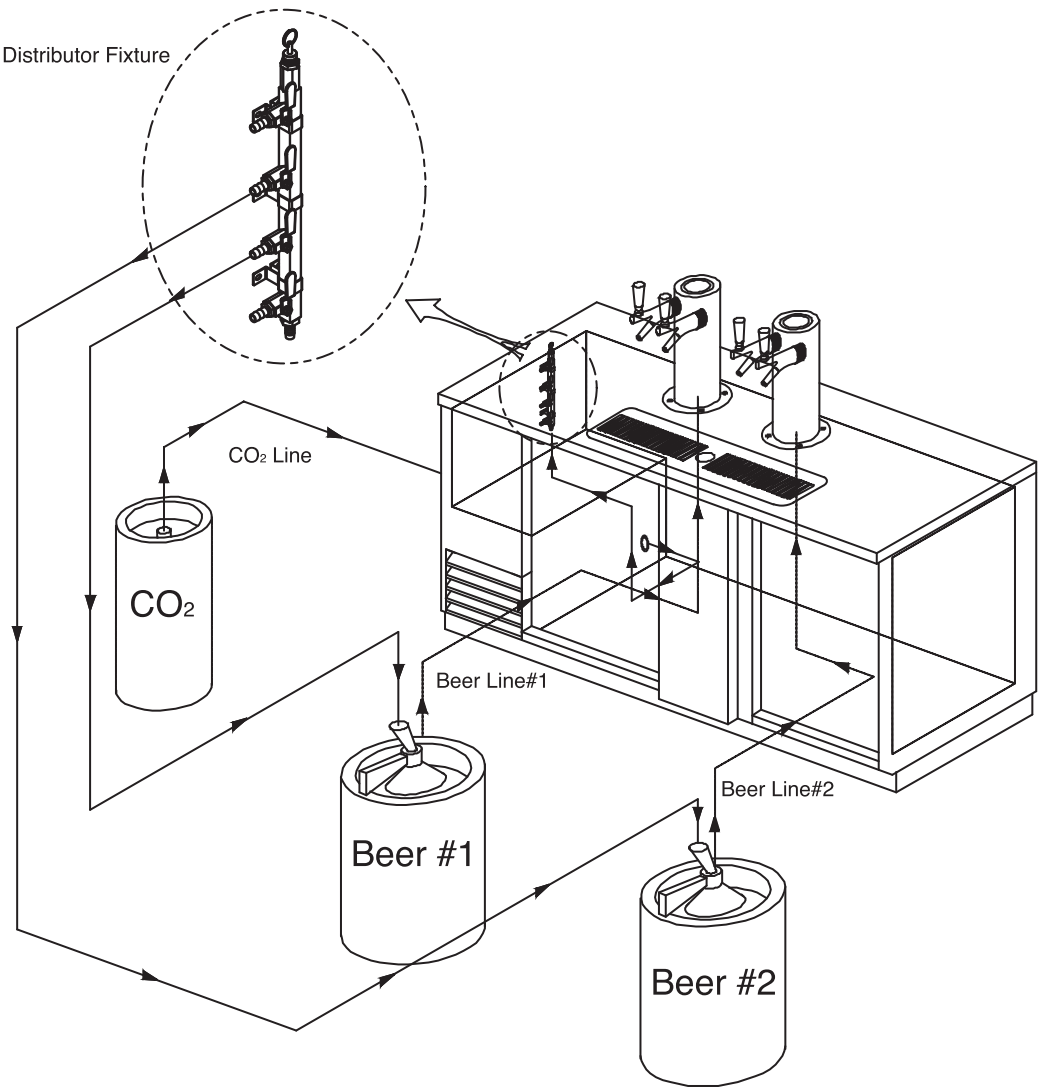

TBD-2S*-N#, TBD-3S*-N#, TBD-4S*-N#
TCB-2S*-N#, TCB-3S*-N#, TCB-4S*-N#

* Assemble BEER LINE & CO2 LINE as indicated in the above diagram.

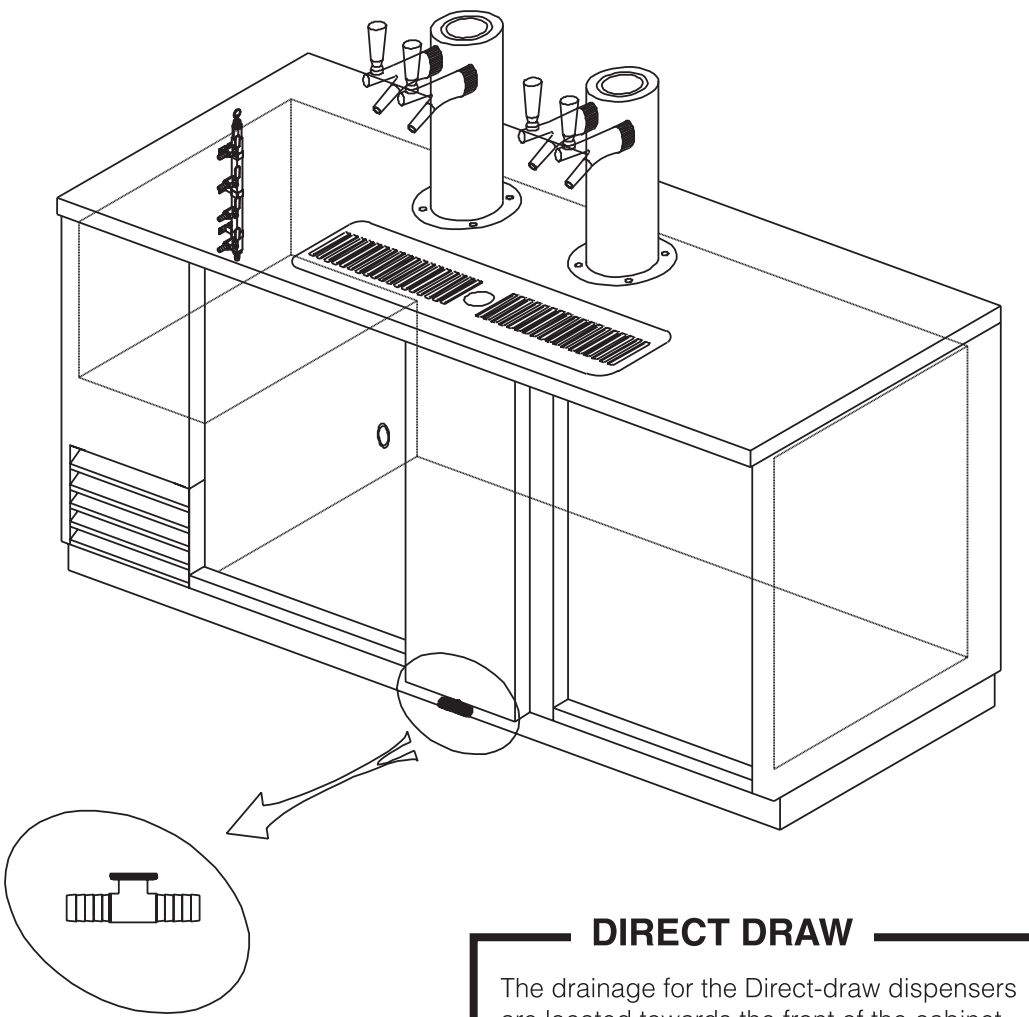

DIRECT DRAW

The drainage for the Direct-draw dispensers are located towards the front of the cabinet. To set up plumbing for the drain, connect the 5/8" PVC pipe to the 5/8" barbed fitting supplied with this unit.

⚠ CAUTION

Don't pull out or turn drain line.

IMPORTANT CAUTIONS

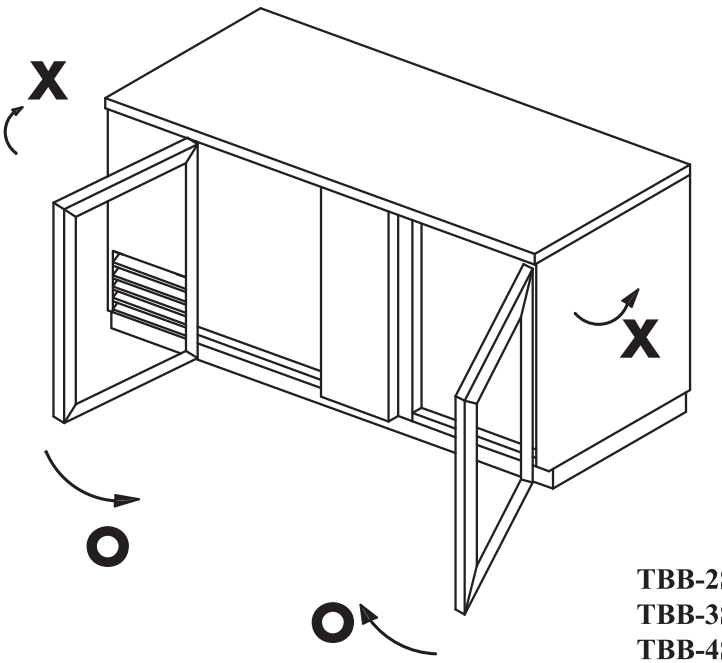

TBB-2S*-N#,
TBB-3S*-N#,
TBB-4S*-N#

⚠ CAUTION

- Opening the doors excessively may cause breakdown.
- When closing the door, handle with care.

⚠ CAUTION

1. POWER CORD
- Be sure the power cord is connected to the proper voltage.
  Make sure the amps are running before connecting the power cord to the outlet.
- A protected and dedicated circuit with the correct voltage and amperage must be running in order to have connection to the line cord.
- Whenever cleaning or performing maintenance on the unit, unplug the power source first.
- Warranty will be void if anything is damaged due to being plugged into improper voltage.

2. RE-STARTING
- If unplugged, wait 5 minutes before re-starting.

3. POSITIONING DRINKS
- Do not obstruct the air inlet which is located at the back inside of the unit.

4. To prevent a child from being entrapped, keep out of reach of children and not in the vicinity of the freezer.

5. Never repair or disassemble or amend the cabinet on your own.
- There is a risk of person injury or damage to the freezer.
- It is recommended that any service be carried out by a qualified person.

NOTICE TO CUSTOMER

Loss or spoilage of products in your refrigerator/freezer is not covered by warranty. In addition to following recommended installation procedures, you must run the refrigerator/ freezer 24 hours prior to usage.



INSTALLATION

1. **LOCATION -** Allow adequate space and install the refrigerator on a firm, and level floor. If the appliance is not level, there may be unusual noises and poor cooling performance.

2. **GOOD AIR CIRCULATION -** Be sure to avoid any partition and object which may stop the air flow and that air space is allowed to flow the rear and/or sides of the unit between the refrigerator and the back wall. Insufficient space causes the noise of vibration, inefficient refrigeration, damage to the refrigeration system, and the waste of electricity. (Turbo Air recommends that the rear of the unit would be no less than 5 inches from the wall)

3. **PLACE ON STRONG FLOOR -** Be sure that the floor of which the unit is to be installed is strong enough to support the total weight of the cabinet and any other contents, before starting the installation.

4. **DO NOT PLACE NEAR HEAT -** Be sure to avoid hot corners and other locations such as near stoves. High ambient temperature will make much lower cooling efficiency.

5. **INDOOR USAGE ONLY -** Be sure to install this unit indoor only. It should prohibit getting wet from the rain.
   Do not install the refrigerator in locations where the temperature is over 110°F (43°C) or below 50°F (10°C).

6. **STABILIZING -** Make sure the unit is installed in a stable condition with the front wheels locked while in use.

7. **LEVELING -** Be sure that the unit levels from the front to the back and side to side.

8. **UNIT SHOULD BE ON DEDICATED OUTLET -** Plug the refrigerator into a wall socket exclusively for this appliance. Do not run on extension cord.

9. **THE ELECTRICAL PLUG MUST BE ACCESSIBLE WITHOUT MOVING THE UNIT.**

10. **IF A FOOD STORAGE IS IN POSITION, A MAXIMUM OF ONE SHELF MAY BE LOADED LESS THAN 110*lb* (50*kg*), BUT DO NOT ALLOW LOADS TO OVERHANG FROM THE FRONT AND REAR EDGES OF SHELVES (only for model TBB series).**

CLEANING

Before cleaning, unplug the unit and disconnect the power.
Wipe and clean the inside and outside of appliance with a damp cloth.

1. CLEANING THE INTERIOR AND EXTERIOR

- The interior and exterior of the unit can be cleaned using warm water with soap.
- Do not use an abrasive cleaner because it will scratch the surface.

2. CLEANING THE CONDENSER COIL

- To maintain proper refrigeration performance, the Condenser coil must be free of dust, dirt, and grease. This will require periodic cleaning. Condenser coil should be cleaned at least every three months (90 days) or as needed.
- To clean the condenser, unplug the power cord. Condenser can be cleaned with vacuum, brush, or CO2 (high pressure air).

NOTE: For a self-cleaning condenser equipped model, condenser cleaning is not required.
However, it is recommended to blow the condenser coil out with Nitrogen once or twice a year. Note that the condenser cleaner may not remove grease.

3. CLEAN THE DRAIN PAN

- Periodically, empty the drain pan which is located under the unit.
- When reinstalling the Drain Pan, make sure the drain hose is placed back into the pan.

4. CHECK AFTER CLEANING

1) Check the unit again for safety.
2) Plug unit back in and turn on power switch.
3) Check that the unit is operating properly.

BASIC OPERATION (Thermostat Type)

REFRIGERATORS

1. The controller(thermostat) is located at the back right inside of the unit.

2. The factory setting maintains about 37˚F(3˚C) inside.

3. Turn the controller “counter clock wise (or the lower number setting)” for higher temperature, and “clock wise (or the higher number setting)” for lower temperature.

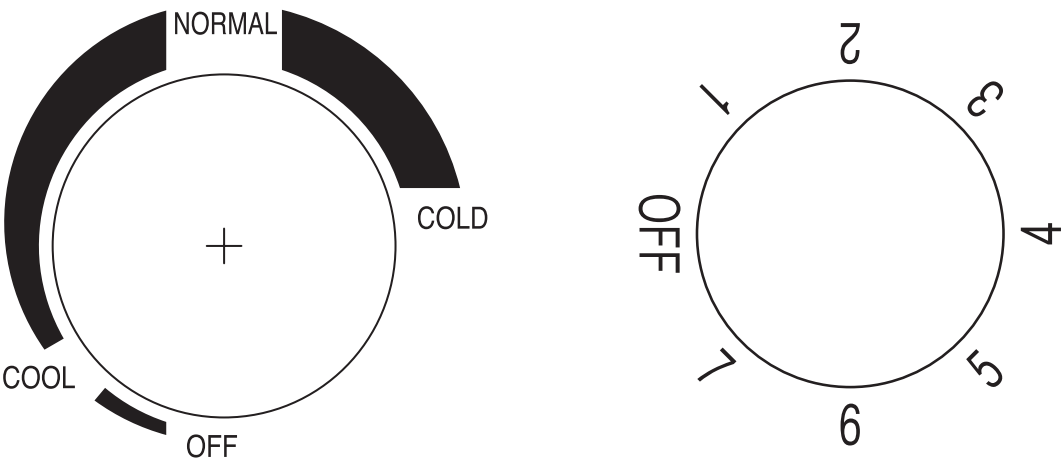

Temperature Controller (Thermostat)

4. The thermostat controls compressor's cycling by sensing temperature inside the unit.

5. When unit will not be used for a long time, unplug the unit.

STAINLESS STEEL EQUIPMENT CARE AND CLEANING

CAUTION : Do not use any steel wool, abrasive or chlorine based products to clean stainless steel surfaces.

Stainless Steel Opponents

There are three basic things which can break down your stainless steel's passivity layer and allow corrosion to rear its ugly head.

1) Scratches from wire brushes, scrapers, and steel pads are just a few examples of items that can be abrasive to the stainless steel surface.

2) Deposits left on your stainless steel can leave spots. You may have hard or soft water depending on what part of the country you live in. Hard water can leave spots. Hard water that is heated can leave deposits if left to sit too long. These deposits can cause the passive layer to break down and rust your stainless steel. All deposits left from food prep or service should be removed as soon as possible.

3) Chlorides are present in table salt, food, and water. Household and industrial cleaners are the worst type of chlorides to use.

8 steps that can help prevent rust on stainless steel:

1. Using the correct cleaning tools

Use non-abrasive tools when cleaning your stainless steel products. The stainless steel's passive layer will not be harmed by soft cloths and plastic scouring pads. Step 2 tells you how to find the polishing marks.

2. Cleaning along the polish lines

Polishing lines or "grain" are visible on some stainless steels. Always scrub parallel to visible lines on some stainless steels. Use a plastic scouring pad or soft cloth when you cannot see the grain.

3. Use alkaline, alkaline chlorinated or non-chloride containing cleaners

While many traditional cleaners are loaded with chlorides, the industry is providing an ever increasing choice of non-chloride cleaners. If you are not sure of your cleaners chloride content contact your cleaner supplier and request a non-chloride cleaner that can be used as alternative to chloride containing cleaners. Avoid cleaners containing quaternary salts as they can attack stainless steel, causing pitting and rusting.

STAINLESS STEEL EQUIPMENT CARE AND CLEANING

4. Water Treatment

To reduce deposits, soften the hard water when possible. Installation of certain filters can remove corrosive and distasteful elements. Salts in properly maintained water softener can be to your advantage. Contact a treatment specialist if you are not sure of the proper water treatment.

5. Maintaining the cleanliness of your food equipment

Use cleaners at recommended strength (alkaline, alkaline chlorinated or non-chloride). Avoid build-up of hard stains by cleaning too frequently. When boiling water with your stainless steel equipment, the single most likely cause of damage is chlorides in the water. Heating any cleaners containing chlorides will have the same damaging effects.

6. Rinse

When using chlorinated cleaners you must rinse and wipe dry immediately. It is better to wipe standing cleaning agents and water as soon as possible. Allow the stainless steel equipment to air dry. Oxygen helps maintain the passivity film on stainless steel.

7. Hydrochloric acid (muriatic acid) should never be used on stainless steel.

8. Regularly restore/passivate stainless steel.

Recommended cleaners for certain situation/environments of stainless steel.

A) Soap, ammonia and detergent medallion applied with a cloth or sponge can be used for routine cleaning.

B) Arcal 20, Lac-O-Nu Ecoshine applied provides barrier film for fingerprints and smears.

C) Cameo, Talc, Zud First Impression is applied by rubbing in the direction of the polished lines for stubborn stains and discoloring.

D) Easy-off and De-Grease it oven aid are excellent for removals on all finishes for grease-fatty acids, blood and burnt-on foods.

E) Use any good commercial detergent with a sponge or cloth to remove grease and oil.

F) Benefit, Super Sheen, Sheila Shine are good for restoration/passivation.

TROUBLESHOOTING

1. If the appliance does not turn on, check for:
   - Power failure,
   - Properly inserted plug,
   - The power switch is on,
   - Thermostat setting

2. If the temperature inside the compartments is not low enough, check for:
   - Closure of the doors,
   - Installation near a heat source,
   - Correct setting of the refrigerator / freezer temperature controls,
   - Inhibited air circulation.
   - Condenser coil is properly cleaned.

3. If the refrigerator compartment temperature is too low, check for:
   - Correct setting of the temperature controls.

TROUBLESHOOTING

SYMPTOMS	CAUSES	SOLUTIONS
Cooler is freezing food.	• Thermostat set too cold.	• Turn the thermostat setting to a higher temperature position.
The unit does not refrigerate at all.	• There is a power connection failure problem.	• Check the power cord and plug in correctly.
The unit does not refrigerate well.	• The unit is in sunlight or near a heating device. • The unit contains hot food or too much food. • The unit door is opened too frequently or left open long. • The temp. dial is not on the correct position. • The condenser is clogged.	• Check the installation place. • Check the condition of stored food. • Check the position of the temp control dial.
There is a loud noise.	• The floor is too weak or the leveling feet is set incorrectly. • The back-side of the unit is too close to the wall.	• Check the installation.
There are dew-drops on the unit exterior.	• High-moisture air can produce dewdrops during rainy season.	• Wipe with a dry cloth.
There are dew-drops on the unit interior.	• The door is opened too frequently or left open long. • Damp food is stored.	• Keep the door closed to remove dewdrops.
The door does not close tightly.	• The door is bent. • The unit is a levelling failure. • The door gasket has come out.	• Level the unit again. • Reposition the gasket.

The following points are not malfunctions:

- A water-flowing sound can be heard when the compressor stops. This is the sound of REFRIGERANT flowing.
- The compressor does not run during the defrost cycle.

Note: Formation of condensation on and around the edge of the door and the front side of the cabinet is normal. Gurgling noises inside the refrigerating circuit are normal.

THREE (3) YEAR WARRANTY

Warranty Claims...

All claims for parts or labor must be made directly through Turbo Air. All claims should include: model number of the unit, the serial number of the cabinet, proof of purchase, date of installation, and all pertinent information supporting the alleged defect. In case of compressor replacement under warranty, either compressor or compressor tag must be returned to Turbo Air along with above listed information.

Failure to comply with warranty policies will result in voiding claims.

Three-Year Parts & Labor Warranty...

Turbo Air warrants all new refrigerated components, the cabinet and all parts, to be free from defects in materials or workmanship, under normal and proper use and maintenance service as specified by Turbo Air and upon proper installation* (indoor building only) and start-up in accordance with the instruction packet supplied with each Turbo air unit. Turbo Air's obligation under this warranty is limited to a period of three (3) year from the date of original installation or thirty nine (39) months after shipment date from Turbo Air, whichever occurs first. Any part, covered under this warranty, that are by Turbo Air to have been defective within three (3) year of original installation or thirty nine (39) months after shipment date from manufacturer, whichever occurs first, is limited to the repair or replacement, including labor charges, of defective parts or assemblies. The labor warranty shall include standard straight time labor charges only and reasonable travel time, as determined by Turbo Air. (*Installation in unstable, mobile, and enclosed area may not be considered as proper installation.)

Additional Two or Four-Year Compressor Warranty...

In addition to the three (3) year warranty stated above, Turbo Air warrants its hermetically sealed compressor to be free from defects in both material and workmanship under normal and proper use and maintenance service for a period of two (2) or four (4)* additional years from the date of original installation, but not to exceed seven (7) years and three (3) months after shipment from the manufacturer. Compressor determined by Turbo Air to have been defective within this extended period will, at Turbo Air's discretion, be either repaired or replaced with a compressor or compressor parts of similar design and capacity.

The two (2) or four (4) year extended compressor warranty applies only to hermetically sealed parts of the compressor and does not apply to any other parts or components, including, but not limited to, cabinet, paint finish, temperature control, refrigerant, metering device, driers, motor starting equipment, fan assembly or and/or other electrical components.

*Additional four (4) year compressor warranty applies to PRO and Super Deluxe models only.

R-290/R-600a Hydrocarbon Compressor Warranty...

The two or four-Year compressor warranty detailed above will be void if the following procedure is not carefully adhered to:

1. This system may contain R290 refrigerant and polyol ester lubricant.

   The polyol ester lubricant has rapid moisture absorbing qualities. If long exposure to the ambient conditions occur, the lubricant must be removed and replaced with new.

2. Drier replacement is very important and must be changed when a system is opened for servicing.

   Drier with XH-7 molecular sieve or better must be used.

3. Micron level vacuums must be achieved to ensure low moisture levels in the system. 500 microns or lower must be maintained.

4. Compressor must be obtained through Turbo Air, unless otherwise specified in writing, through Turbo Air's warranty department.

WARRANTY INFORMATION

What is Not Covered by This Warranty...

Turbo Air's sole obligation under this warranty is limited to either repair or replacement of parts, subject to the additional limitations below. This warranty neither assumes nor authorizes any person to assume obligations other than those expressly covered by this warranty.

NO CONSEQUENTIAL DAMAGES. TURBO AIR IS NOT RESPONSIBLE FOR ECONOMIC LOSS;

PROFIT LOSS; OR SPECIAL, INDIRECT, OR CONSEQUENTIAL DAMAGES, INCLUDING WITHOUT LIMITATION, LOSSES, OR DAMAGES ARISING FROM FOOD OR PRODUCT SPOILAGE REGARDLESS OF WHETHER OR NOT THEY RESULT FROM REFRIGERATION FAILURE.

WARRANTY IS NOT TRANSFERABLE. This warranty is not assignable and applies only in favor of the original purchaser/user to whom delivered. ANY SUCH ASSIGNMENT OR TRANSFER SHALL VOID THE WARRANTIES HEREIN AND SHALL VOID ALL WARRANTIES, EXPRESS OR IMPLIED, INCLUDING ANY WARRANTY OF MERCHANTABILITY OR LABOR COVERAGE FOR COMPONENT FAILURE OR OTHER THE WARRANTY PACKET PROVIDED WITH THE UNIT.

Turbo Air will not be held responsible for the following external factors: ALTERATION, NEGLECT, ABUSE, MISUSE, ACCIDENT, DAMAGE DURING TRANSIT OR INSTALLATION, FIRE, FLOOD, ACTS OF GOD, OR IMPROPER ELECTRICAL CONNECTIONS.

TURBO AIR IS NOT RESPONSIBLE FOR THE REPAIR OR REPLACEMENT OF FAILED OR DAMAGED COMPONENTS RESULTING FROM ELECTRICAL POWER FAILURE, THE USE OF EXTENSION CORDS, LOW VOLTAGE, OR VOLTAGE DROPS TO THE UNIT.

Use of NON-OEM parts without manufacturer's approval may void cabinet warranty.

NO IMPLIED WARRANTY OF MERCHANTABILITY OR FITNESS FOR A PARTICULAR PURPOSE;

THE FOREGOING WARRANTIES ARE EXCLUSIVE AND EXPRESSLY GIVEN IN LIEU OF ALL OTHER WARRANTIES, EXPRESSED, IMPLIED OR STATUTORY.

THERE ARE NO WARRANTIES, WHICH EXTEND BEYOND THE DESCRIPTION ON THE FACE HEREOF.

Warranty information card must be submitted via post mail or electronically on our website at www.turboairinc.com/registration within 7 days from the purchase date. Failure to comply may result in your warranty being voided.

All coverage provided within this warranty is applicable only to the United States, including Alaska and Hawaii, and Canada, excluding U.S. Territories; limited parts only warranty in U.S. Territories. Turbo Air is not responsible for any warranty claims made on products sold or used outside the fifty states of the United States.

The extended warranty period specific to each Turbo Air product applies to all units sold by Turbo Air starting January 1, 2020.

Warranty information card must be submitted via post mail or electronically on our website at ***www.turboairinc.com/registration*** within 7 days from the date of purchase. Failure to comply may result in your warranty being voided.

WARRANTY REGISTRATION CARD

MAIL CARD IMMEDIATELY OR GO TO ONLINE REGISTRATION AT *www.turboairinc.com/registration*

Company Name: _____

Type of Business: _____

Model Number: _____

Serial Number: _____

Phone Number: _____, **Email:** _____

Address: _____,
(Street / Unit #)

_____, _____, _____
(City) (State) (Zip Code)

I, _____ hereby inform and certify to Turbo Air Inc. (Manufacturer) that the product model
(Owner's Name)

and serial number mentioned above was purchased on _____ from _____.
(Date of Purchase) (Name of the Dealer)

Turbo Air Inc.

4184 E. Conant St., Long Beach, CA 90808
Toll Free: 1-800-381-7770
Fax: 310-900-1033
Email: warranty@turboairinc.com

REFRIGERATOR MANUFACTURER
Turbo air

4184 E. Conant St., Long Beach, CA 90808
Toll Free: 1-800-381-7770
Fax: 310-900-1033
Email: warranty@turboairinc.com

www.turboairinc.com