Criterion®

User's Manual

Refrigerator-Freezer

MODEL: CTMR205M1W CTMR205M1B CTMR205M1S

Before using your product, please read this manual carefully and keep it for future reference.

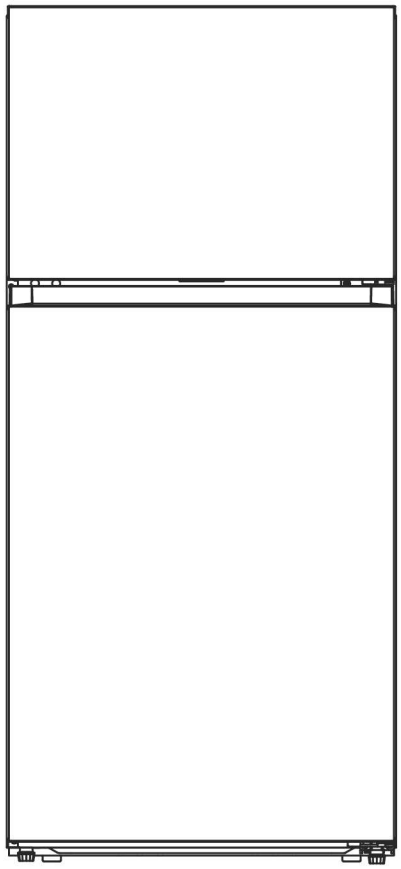

LANGUAGES

EN	English

CONTENTS

SAFETY INSTRUCTIONS ---------- 04

SPECIFICATIONS ---------- 10

PRODUCT OVERVIEW ---------- 11

PRODUCT INSTALLATION ---------- 12

OPERATION INSTRUCTIONS ---------- 20

CLEANING AND MAINTENANCE ---------- 23

TROUBLESHOOTING ---------- 25

DISPOSAL AND RECYLING ---------- 27

WARRANTY ---------- 28

SAFETY INSTRUCTIONS

Intended use

Before switching on the appliance for the first time read the following safety hints!

This appliance is intended to be used in household and similar applications such as staff kitchen areas in shops, offices and other working environments; farm houses and by clients in hotels, motels and other residential type environments; bed and breakfast type environments; catering and similar non-retail applications.

If the appliance is used commercially or for purposes other than cooling food, please note that the manufacturer cannot accept any liability for any damage.

Modifications or alterations to the unit are not permitted for safety reasons.

Explanation of symbols



Danger

This symbol indicates that there are dangers to the life and health of persons due to extremely flammable gas.



Warning of electrical voltage

This symbol indicates that there is a danger to life and health of persons due to voltage.



Warning

The signal word indicates a hazard with a medium level of risk which, if not avoided, may result in death or serious injury.



Caution

The signal word indicates a hazard with a low degree of risk which, if not avoided, may result in minor or moderate injury.



Attention

The signal word indicates important information (e.g. damage to property), but not danger.



Observe instructions

This symbol indicates that a service technician should only operate and maintain this appliance in accordance with the operating instructions.

Read these operating instructions carefully and attentively before using/ commissioning the unit and keep them in the immediate vicinity of the installation site or unit for later use!



WARNING

Risk of fire / Flammable material

- **DANGER** Risk of fire or explosion.Flammable refrigerant used. Do not use mechanical devices to defrost refrigerator.Do not puncture refrigerant tubing.
- **DANGER** Risk of fire or explosion.Flammable refrigerant used. To be repaired only by trained service personnel. Use only manufacturer authorized service parts. Any repair equipment used must be designed for flammable refrigerants. Follow all manufacturer repair instructions. Do not puncture refrigerant tubing.

⚠ CAUTION

- **CAUTION** Risk of fire or explosion. Dispose of refrigerator properly in accordance with the applicable federal or local regulations. Flammable refrigerant used.
- **CAUTION** Risk of fire or explosion due to puncture of refrigerant tubing. Follow handling instructions carefully. Flammable refrigerant used.

⚠ WARNING General safety

- Install in accordance with the manufacturer's instructions.
- This product should not be recessed or built-in an enclosed cabinet. It is designed for freestanding installation only.
- **WARNING** - Keep ventilation openings, in the product, clear of obstruction.
- Do not install near any heat sources, such as radiators, heat registers, stoves, other cooking appliances or in direct sunlight.
- Do not store or use gasoline or any flammable liquids inside or in the vicinity of this refrigerator.
- Do not store explosive substances such as aerosol cans with a flammable propellant in this appliance.
- Do not use electrical appliances inside the food storage compartments of the appliance, unless they are of the type recommended by the manufacturer.
- Do not use mechanical devices or other means to accelerate the defrosting process, other than those recommended by the manufacturer.
- This appliance is not intended for use by persons (including children) with reduced physical, sensory or mental capabilities, or lack of experience and knowledge, unless they have been given supervision or instruction concerning use of the appliance by a person responsible for their safety.
- Do not damage the refrigerator circuit.

WARNING Electrical safety

Incorrect electrical installation or excessive mains voltage can lead to electric shocks!

- Only connect your fridge-freezer to a properly installed earthed socket if the mains voltage of the socket corresponds to the specification on the rating label*.
- Do not use extension cords or ungrounded (two-pin) adapters.
- Make sure that all electrical cables outside the appliance are protected from damage (e.g. by animals or sharp edges).
- Do not locate multiple portable socket outlets or portable power supplies at the rear of the appliance.
- Improper power supply may result in fire or electric shocks.
- Avoid electrical overload.Disconnect the mains plug from the mains socket before carrying out care, maintenance and repair work on the unit.
- Switch off the unit and disconnect the mains plug from the mains socket when you are not using the unit.
- If the supply cord is damaged, it must be replaced by the manufacturer, its service agent or similarly qualified persons in order to avoid a hazard.
- If the products are equipped with LEDs, do not remove the lighting cover and LED yourself. Any replacement or maintenance of the LED lamps is intended to be made by the manufacturer, its service agent or similar qualified person.

This product is not recommended for use with sockets or main switch with the A/GFCI function, otherwise it may cause false tripping.

1. It's not pose a safety risk when tripped.

2. If tripping persists, it is recommended to replace the sockets or main switch without a/gfci function.

WARNING Child Safety

- Children should be supervised to ensure that they do not play with the appliance.
- Destroy carton, plastic bags, and any exterior wrapping material immediately after the product is unpacked.
- Children should never use these items to play. Cartons covered with rugs, bedspreads, plastic sheets or stretch wrap may become airtight chambers, and can quickly cause suffocation.
- Remove all staples from the carton. Staples can cause severe cuts, and destroy finishes if they come in contact with other appliances or furniture.

Risk of child entrapment. Before you throw away your old refrigerator or freezer:

- Take off the doors.
- Leave the shelves in place so that children may not easily climb inside.

⚠ CAUTION Risk of injury and damage!

- Never put frozen food in your mouth immediately after taking it out of the freezer.
- Avoid prolonged skin contact with frozen food, ice and the pipes in the freezer compartment.
- Do not store explosive substances such as aerosol cans with a flammable propellant in this appliance.Also do not place flammable products near the product.
- Do not store beer, drinks or other liquids in bottles or tightly closed containers in the freezer compartment!

⚠ WARNING

State of California Proposition 65 Warnings:

- This product can expose you to chemicals including lead, which is known to the State of California to cause cancer, and bisphenol A (BPA) and lead which are known to the state of California to cause birth defects or other reproductive harm. For more information go to **www.P65Warnings.ca.gov.**

⚠ CAUTION

To avoid contamination of food, please respect the following instructions:

- Opening the door for long periods can cause a significant increase of the temperature in the compartments of the appliance.
- Clean regularly surfaces that can come in contact with food and accessible drainage systems.
- Clean water tanks if they have not been used for 48h; flush the water system connected to a water supply if water has not been drawn for 5 days. (Note1)(*)
- **WARNING:** Fill with potable water only.(*)
- **WARNING:** Connect to potable water supply only. (Suitable for ice making machine)(*)

ATTENTION

(*): This feature varies depending on the model purchased. Please confirm whether it is applicable according to your product.

Before The First Use

The packaging must be undamaged. Check the device for transport damage. Do not connect a damaged device under any circumstances. In case of damage, please contact the supplier.

Remove transport cover

The unit and parts of the interior are protected for transport. You can remove all adhesive tapes on the right and left side of the device door as well as any adhesive residues with cleaning solvent. Remove all adhesive tapes and packaging parts from the interior of the device as well.

After transport, the device should stand for 12 hours to allow the coolant to collect in the compressor. Non-observance could damage the compressor and thus lead to failure of the device.

⚠ CAUTION Risk of damage!

Set up device

- The ambient temperature affects the power consumption and proper functioning of the device. Therefore, the device should be placed in a well-ventilated and dry room with an ambient temperature corresponding to the climate class for which the device is designed.
- Do not place the device outdoors (e.g. balcony, terrace, garden shed, etc.).

Do not use sharp knives or pointed objects when opening the device. Please observe the notes when setting up: “Tips for energy saving”

Remove the device doors

- If the unit does not fit through the apartment door,the unit doors can be unscrewed.

ATTENTION

The unscrewing of the unit doors may only be carried out by the customer service.

⚠ CAUTION Notes For Cleaning

Disconnect the appliance from the power supply before cleaning.

- Dust behind the product and on the floor must be cleaned to improve the cooling effect and energy saving.
- Check the door gasket regularly to make sure there is no debris. Clean the door gasket with a soft cloth dampened with soapy water or diluted detergent.
- The interior of the product should be cleaned regularly to avoid odors.
- Please turn off the power before cleaning the interior, remove all foods, drinks, shelves, drawers, etc.
- Use a soft cloth or sponge to clean the inside of the product, with two tablespoons of baking soda and a quart of warm water. Then rinse with water and wipe clean. After cleaning, open the door and let it dry naturally before turning on the power.
- For areas that are difficult to clean inside the product (such as narrow places, gaps or corners), we recommend to wipe them regularly with a soft rag, soft brush, etc. and when necessary, with some tools (such as thin sticks) to ensure no contaminants or bacterial accumulation in these areas.
- Do not use soap, detergent, scrub powder, spray cleaner, etc., as these may cause odors inside the product or contaminat food.
- Clean the door tray, shelves and drawers with a soft cloth dampened with soapy water or diluted detergent. Dry with a soft cloth or dry naturally.
- Wipe the outer surface of the product with a soft cloth dampened with soapy water, detergent, etc., and then wipe dry.
- Do not use hard brushes, scouring pads, wire brushes, abrasives (such as toothpaste), organic solvents (such as alcohol, acetone, banana oil, etc.), boiling water, acid or alkaline items, which may damage the fridge surface and interior. Boiling water and organic solvents such as benzene may deform or damage plastic parts.
- Do not rinse directly with water or other liquids during cleaning to avoid short circuit or affect electrical insulation after immersion.

SPECIFICATIONS

Product model	CTMR205M1W, CTMR205M1B,CTMR205M1S
Total Storage Volume	580L(20.5cu.ft.)
Rated Voltage	115V~/ 60Hz
Rated Current	2A
Overall Dimension (H x W x D)	1692mm x 755mm x 830mm 66.6″ x 29.7″ x 32.7″

Names of components

Display panel on the top

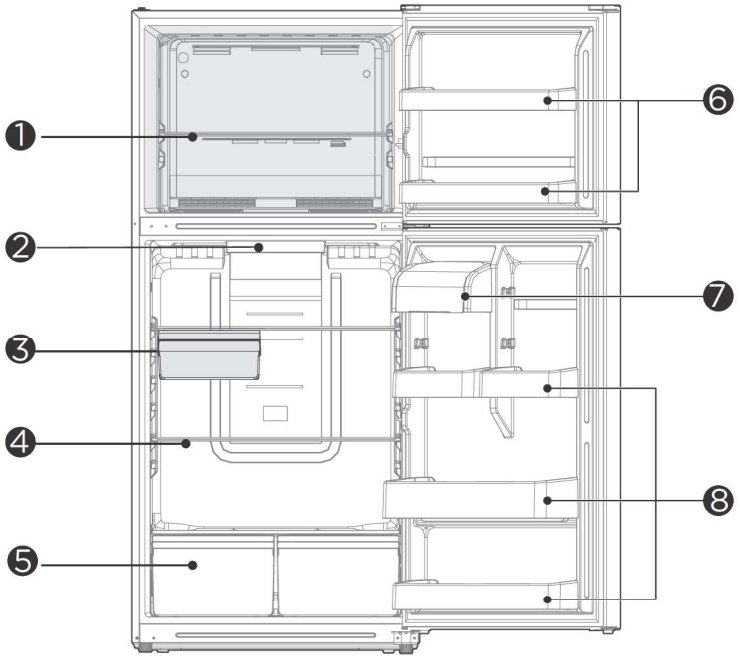

1	Freezer glass shelf	**5**	Fruits and vegetables box
2	Display control	**6**	Freezer door tray
3	Deli box (Optional)	**7**	Storage box
4	Refrigerator shelf	**8**	Refrigerator door tray

ATTENTION

The picture above is only for reference. The actual configuration will depend on the physical product or statement by the distributor.

When the refrigerator is powered on for the initial time, storing too much food may adversely affect the cooling effect of the refrigerator.
Do not block the air outlet during food storage, which may adversely affect the cooling effect.
If the temperature in fridge compartment is cold, please adjust the switcher to the weaker position.If the temperature in fridge compartment is not cold enough, please adjust the switcher to the strong position.

PRODUCT INSTALLATION

Install Instruction

Finding a suitable location

- This refrigerator is designed to be free standing only, and should not be recessed or built-in.
- The refrigerator should be placed in a well-ventilated indoor place; the ground shall be flat and sturdy .
- Keep away from heat and avoid direct sunlight. Do not place the refrigerator in moist or watery places to prevent rust or reduction of insulating effect.

Dimensions and Clearances

- Too small of a distance from adjacent items may result in the degradation of freezing capability and increased electricity costs. Allow over 100 mm of clearance from each adjacent wall when installing the appliance.

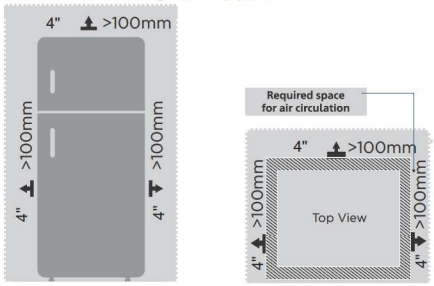

Providing a proper power supply

- Check your local power source. This refrigerator requires a **AC115 V, 60 Hz** power supply.
- Use a receptacle that accepts the grounding prong. The power cord is equipped with a 3-prong (grounding) plug which mates with a standard 3-prong (grounding) wall outlet to minimize the possibility of electric shock hazard from this refrigerator.

⚠ CAUTION

The refrigerator should always be plugged into its own individual electrical outlet which has a voltage rating that matches the rating plate.

Never unplug your refrigerator by pulling on the power cord. Always grip the plug firmly and pull straight out from the outlet.

Start to use

- The refrigerator shall stay for half an hour before connecting power when it is firstly started.
- The refrigerator shall run 2 to 3 hours before loading fresh or frozen foods; the refrigerator shall run for more than 4 hours in summer in advance considering that the ambient temperature is high.

Space requirement diagram (when the door is open and when the door is closed)

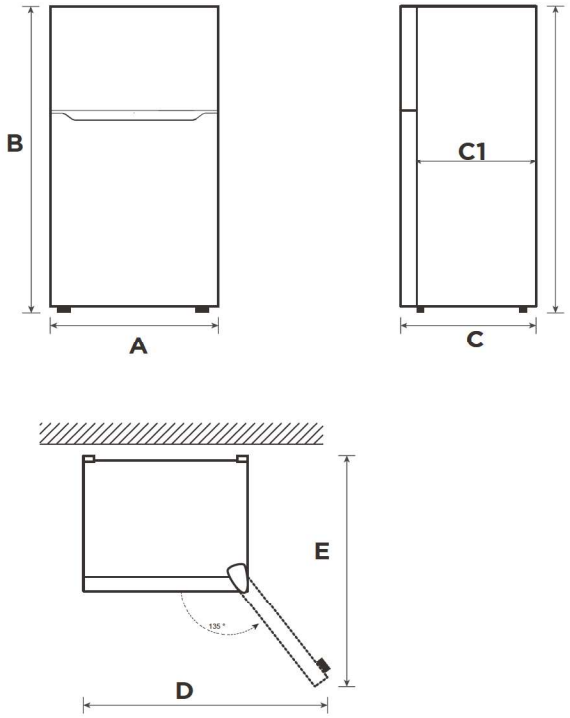

Width	Overall Height	Depth	Depth Only Cabinet	Width doors open 135°	Depth doors open 135°
A	B	C	C1	D	E
755mm / 29.7"	1692mm / 66.6"	830mm / 32.7"	734mm / 28.9"	1275mm / 50.2"	1395mm / 54.9"

Notice: All dimensions in mm & inches

Door right-left change

Based on the location where you plan to use your refrigerator, you may find it more convenient to reverse the position of the door.

⚠ CAUTION

CAUTION: To avoid injury to yourself or your property, we recommend that someone assist you during the door reversal process.

Preparing to reverse the door position

You will need: A standard screwdriver, a Phillips screwdriver, and the included Allen wrench.

- Make sure that your refrigerator is unplugged and empty.
- Have someone available to assist you in the process.
- Keep all of the parts you remove to reuse them later.

Parts included with the hinge kit:

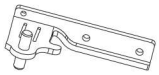

Center left hinge



Left top hinge cover



Top left hinge

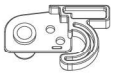

Left door-open stopper



Upper door self-locking block



Hole caps

Parts already mounted on the door (as shipped):

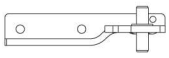

Center right hinge

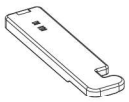

right top hinge cover



Top right hinge



Right door-open stopper



Upper door self-locking block



Hole caps

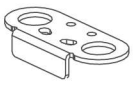

Door block



Bottom hinge



Lower door self-locking block

Step

1. Unplug your refrigerator and remove all food from the door shelves.
2. Remove the cover plate and the top hinge cover, then unscrew and remove the top hinge. Keep the screws to reuse.
3. When the user removes the top hinge cover, note that the hinge cover can not be directly removed,there is a sensor wiring harness connected to the box on the inside side of the hinge cover, it needs to be slowly dismantled, and then take out the sensor wiring harness from the inside side of the hinge cover, and attach the cover on finally.

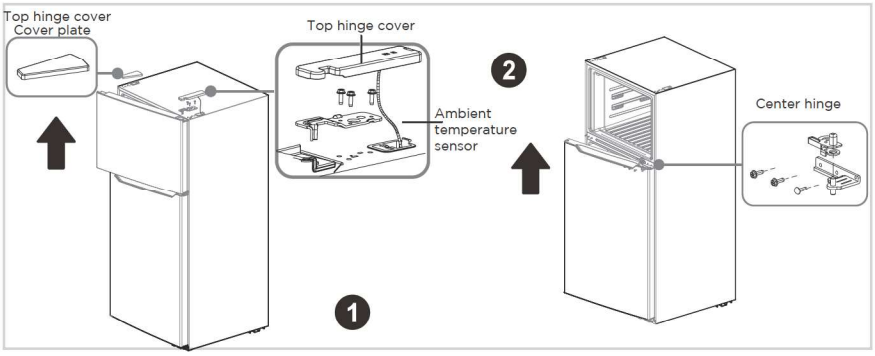

ATTENTION

Images show a refrigerator that opens on the left side. Your refrigerator may open on the right side.
When you remove the cover plate, be careful not to damage the ambient temperature sensor located under the plate. Remove it from the cover pin and leave it in position.

4. Lift the freezer door up and away from your refrigerator.
5. Unscrew the three screws holding the center hinge, remove the hinge, then lift the refrigerator door up and away from your refrigerator. Save the screws to reuse and store the hinge in a safe place in case you need to reverse the door position again.
6. Remove the adjusting foot and screw installed on the bottom hinge before removing the bottom hinge.

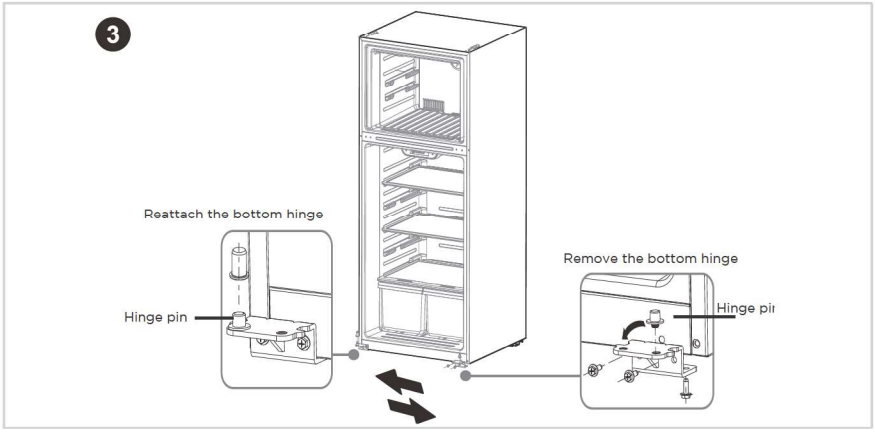

8. Unscrew the hinge pin from the bottom hinge and reattach it to the other hole in the hinge pin, then secure the bottom hinge to the opposite side of the refrigerator using the screws you removed previously.Remove the hole caps and plastic bushings from the top of the freezer and refrigerator doors. Save them for the next step.
9. Insert the hole caps and plastic bushings into the opposite sides (from where you removed them) of the freezer and refrigerator doors.

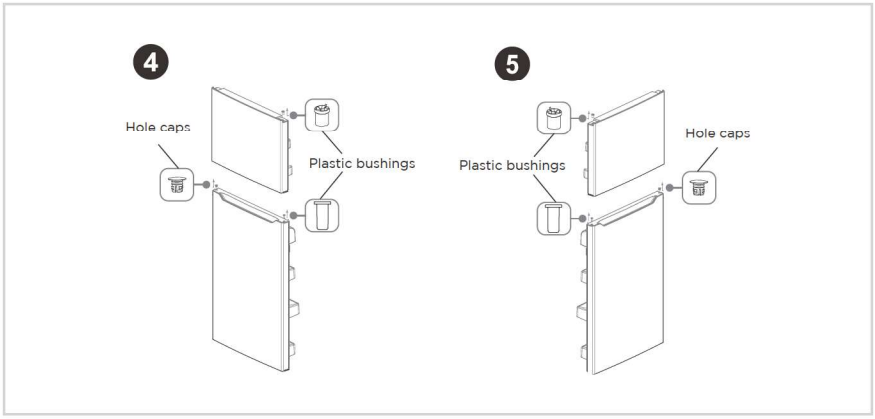

10. Remove the door block from the bottom of the refrigerator door and attach it to the other side.
11. Attach the upper door self-locking block and the door-open stopper to the side of the freezer door where the hinge will be. Use the parts from the hinge kit.

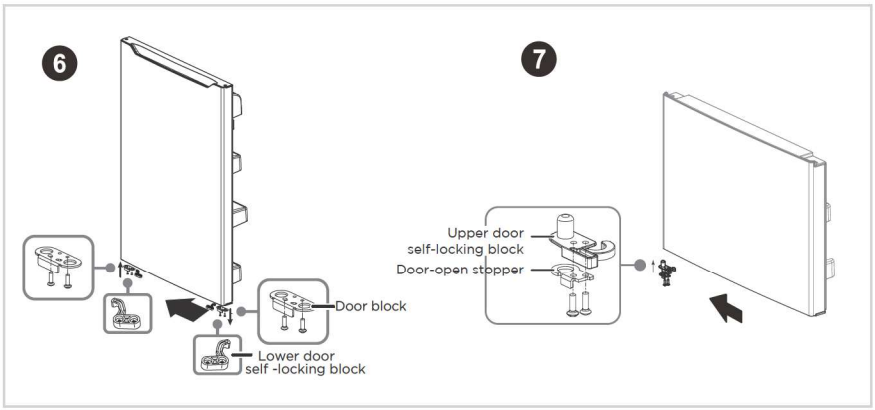

12. Remove the old upper door self-locking block and the door-open stopper (do not remove the parts attached in step 10). Store in a safe place in case you need to reverse the door position again.

13. Attach the refrigerator door to the bottom hinge, then attach the center hinge to the refrigerator. Use the center hinge from the hinge kit (not the piece removed in step 4).

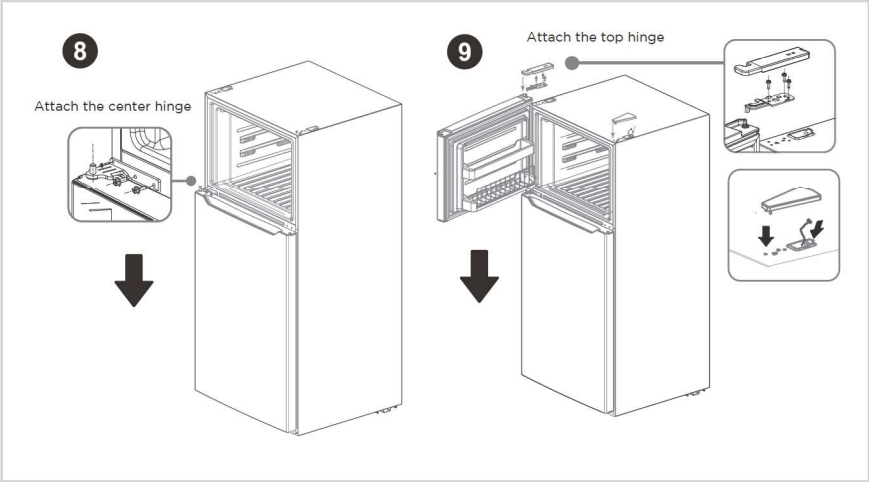

14. Put the freezer door onto the center hinge, then attach the top hinge (from the hinge kit) to the top of refrigeraotr. Cover the hinge with the top hinge cover (from the hinge kit) and cover the screw holes on the top with the cover plate you previously removed.
15. Add covers to the screw holes and hinge pivot.

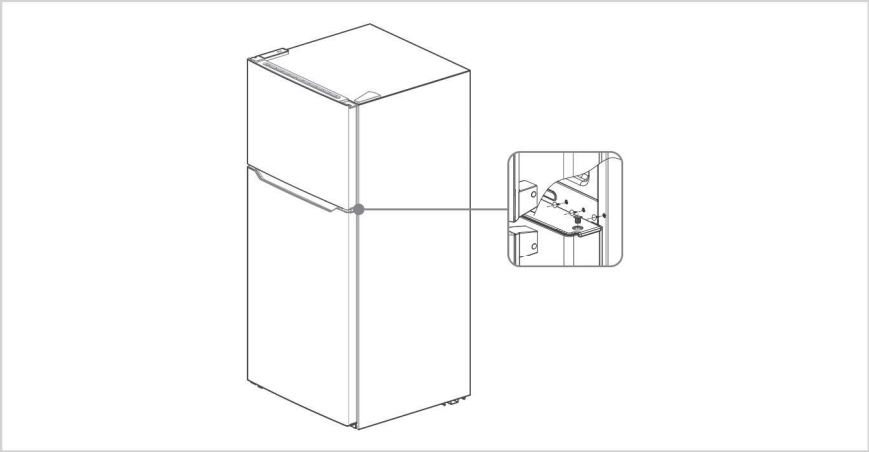

Leveling feet

To avoid vibration, the unit must be leveled.

If required, adjust the leveling screws to compensate for the uneven floor.

The front should be slightly higher than the rear to aid in door closing.

Leveling screws can be turned easily by tipping the cabinet slightly.

Turn the leveling screws counterclockwise to raise the unit, clockwise to lower it.

Moving the appliance

1. Remove all food from inside the appliance.
2. Pull the power plug out, insert and fix it into the power plug hook at the rear or on top of the appliance.
3. Tape parts such as shelves and the door handle to prevent from falling off while moving the appliance.
4. Move the appliance with more than two people carefully. When transporting the appliance over a long distance, keep the appliance upright.
5. After installing the appliance, connect the power plug into a socket outlet to switch on the appliance.

ATTENTION

Precautions before operation:
Before making changes the refrigerator must be disconnected from power.
precautions should be taken to prevent any personal injury.

Changing the light

- Any replacement or maintenance of the LED lamps is intended to be made by the manufacturer, its service agent or similar qualified person.

Connecting the appliance

After installing the appliance, connect the power plug into a socket outlet.

ATTENTION

After connecting the power supply cord (or plug) to the outlet, wait 2 or 3 hours before you put food into the appliance. If you add food before the appliance has cooled completely, your food may spoil.

Tips for energy saving

- Do not place the appliance near cookers, radiators or other heat sources. If the ambient temperature is high, the compressor will run more frequently and for longer, resulting in increased energy consumption.
- Ensure that there is sufficient ventilation at the base of the appliance, on the sides of the appliance and at the back of the appliance. Never cover ventilation openings.
- Please also observe the spacing dimensions in the chapter “Installation”.
- The arrangement of drawers, shelves and racks as shown in the illustration offers the most efficient use of energy and should therefore be retained as far as possible. All drawers and shelves should remain in the appliance to keep the temperature stable and save energy.
- To obtain a larger storage space (e.g. for large refrigerated/frozen goods), the middle drawers can be removed. The top and bottom drawers and shelves should be removed last if necessary.
- An evenly filled refrigerator/freezer compartment contributes to optimal energy use. Therefore, avoid empty or half-empty compartments.
- Allow warm food to cool before placing it in the refrigerator/freezer. Food that has already cooled down increases energy efficiency.
- Allow frozen food to defrost in the refrigerator. The coldness of the frozen food reduces the energy consumption in the refrigerator compartment and thus increases the energy efficiency.
- Open the door only as briefly as necessary to minimise cold loss. Opening the door briefly and closing it properly reduces energy consumption.
- The door seals of your appliance must be perfectly intact so that the doors close properly and energy consumption is not increased unnecessarily.

OPERATION INSTRUCTIONS

Control Panel

Display panel on the top

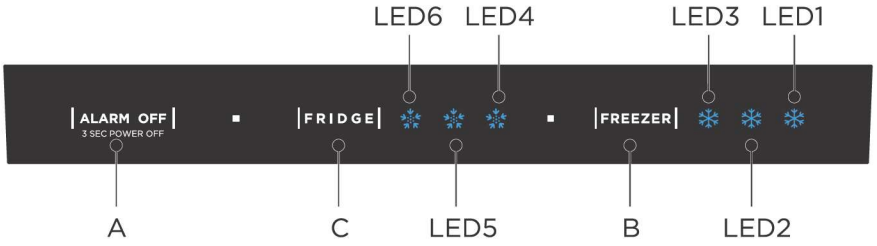

Key	
A	Alarm/power off/power on button
B	Freezer temperature set
C	Fridge temperature set

Display
When the initial power is up, it is 3 seconds, While the boot bell rings, and then goes into normal operation display. (Refrigerator and freezer are mid-range at the time of first power-up)
Display fault code in the event of a failure (Loop display); display the set gear of the refrigeration room in the event of trouble-free.
Under normal circumstances, the current set gear is displayed, and when a “fault code visible” class failure occurs, the fault code is displayed.

ATTENTION

The actual control panel may differ from model to model.

Operating instructions

Refrigerator settings

- Press the refrigeration key to adjust the refrigeration set gear, each press the refrigeration key once, the gear change one gear, the order is as follows:

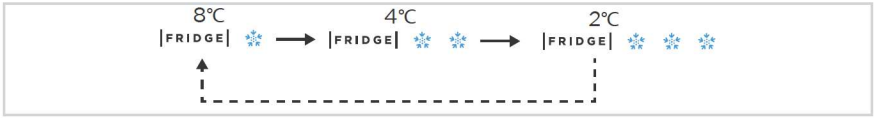

Freezer settings

- Press the refrigeration key to adjust the refrigeration set gear, each press the refrigeration key once, the gear change one gear, the order is as follows:

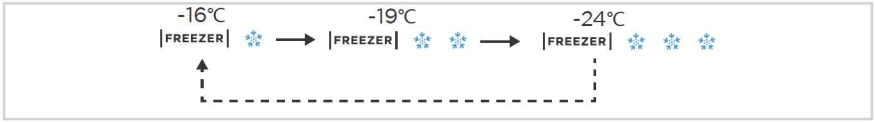

Note: The temperature of each gear is within 32 of the set temperature, and the actual situation is slightly different according to the load situation.

Alarm off

- When a fault alarm occurs, press the alarm off key short, and the fault alarm sound is canceled.

EN

Open the door alarm

- When the freezer door or refrigerator door opens for 120 seconds without shutting down, the buzzer alarms until the freezer door or refrigerator door closes. Or press the alarm off key to cancel the buzzer alarm.

Standby mode

- Press the alarm off key for 3 seconds to enter standby mode, all electrical components are turned off and display is off; In standby mode, long press the alarm off for 3 seconds, return to normal control.

Fault indication

- The following warnings appearing on the display indicate corresponding faults of the refrigerator. If your refrigerator have the following faults please call the after-service team for help.

Fault Code	Fault Description
LED1/LED2 flashing	Refrigerator temperature sensor fault
LED1/LED5 flashing	Freezer temperature sensor fault
LED1/LED3 flashing	Freezing frost sensor faults
LED2/LED4flashing	Communication failure
LED1/LED4 flashing	Ambient temperature sensor fault

Tips on storing food

Freezer compartment

- The freezer is designated for the storage of food frozen at very low temperature, long-term storage of frozen food, and for the production of ice.
- Only use the shelves in the door of the freezer to store frozen food, not for storing hot food designated for freezing.
- Do not put fresh and frozen food next to each other. The frozen food may thaw.
- When freezing fresh food (such as meat, fish or chopped meat), cut them into parts that can be used at the same time.
- Storing frozen food: instructions are usually stated on the packages, which must be followed. If there is no information on the packaging, food should not be stored for longer than three months from the date of purchase.
- When purchasing frozen food, make sure that it was frozen at a suitable temperature and that the packaging is not damaged.
- Frozen food should be kept in suitable packages to retain the quality and should be returned to the freezer compartment as soon as possible.
- If a package of frozen food shows moisture or abnormal bulging, it is probable that it was stored at the wrong temperature and the content is spoiled.
- The storage period for frozen food depends on the room temperature, the thermostat setting, the frequency of opening the door of the freezer, the type of food and the time of transporting the product from the shop to the household. Always follow the instructions printed on the packaging and never exceed the maximum storage time stated on the package.

Refrigerating compartment

- To reduce moisture and subsequent ice build-up, never put liquid into the refrigerator in unsealed containers. Frost tends to concentrate in the coolest parts of the evaporator. Storing uncovered liquids results in a more frequent need for defrosting.
- Never put warm foods in the refrigerator. These should first cool down at room temperature and then be placed so as to ensure adequate air circulation in the refrigerator.
- Foods or food containers should not touch the back wall of the refrigerator because they could freeze to the wall. Do not keep regularly opening the door of the refrigerator.
- Meat and clean fi sh (packed in a package or plastic foil) can be placed in the refrigerator, which can be used in 1–2 days.
- Fruit and vegetables without packaging can be placed in the part designated for fresh fruit and vegetables.

ATTENTION

The optimal temperature setting of each compartment depends on the ambient temperature. Above optimal temperature is based on the ambient temperature of 25 °C.

CLEANING AND MAINTENANCE

Defrosting

- The refrigerator is made based on the air-cooling principle and thus has automatic defrosting function. Frost formed due to change of season or temperature may also be manually removed by disconnection of the appliance from power supply or by wiping with a dry towel.

Cleaning of door tray

- According to the direction arrow in the figure below, use both hands to squeeze the tray, and push it upward, then you can take it out.
- After washing the tray having been taken out, you can adjust its installing height in accordance with your requirement.

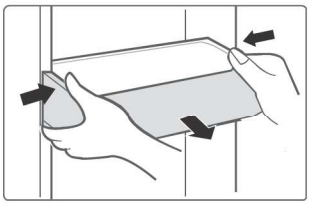

Cleaning of glass shelf

- As the innermost part of the refrigerator liner where contacting the shelves has a backstop, you shall raise the shelves upward, then you can be able to take it out.
- Adjust or clean the shelves according to your requirement.

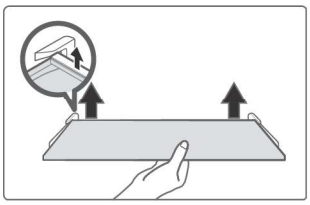

Cleaning the vegetable drawer

1. Remove the contents of the drawer. Hold the handle of the vegetable drawer and pull it out completely until it stops.
2. Lift the vegetable drawer up and remove it by pulling it out.

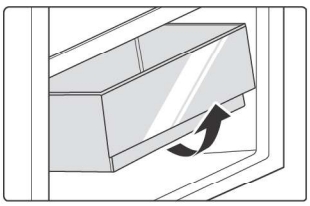

ATTENTION

Soft towels or sponge dipped in water and non-corrosive neutral detergents are suggested for cleaning. The freezer of shall be finally cleaned with clean water and dry cloth. Open the door for natural drying before the power is turned on. Do not use hard brushes, clean steel balls, wire brushes, abrasives, such as toothpastes, organic solvents (such as alcohol, acetone, banana oil, etc.), boiling water, acid or alkaline items clean refrigerator considering that this may damage the fridge surface and interior.

Stop using

Power failure:

In case of power failure, even if it is in summer, foods inside the appliance can be kept for several hours; during the power failure, the times of door opening shall be reduced, and no more fresh food shall be put into the appliance.

Long-time nonuse:

The appliance shall be unplugged and then cleaned; then the doors are left open to prevent odor.

Moving:

Before the refrigerator is moved, take all objects inside out, fix the glass partitions, vegetable holder, freezing chamber drawers and etc. with tape, and tighten the leveling feet; close the doors and seal them with tape. During moving, the appliance shall not be laid upside down or horizontally, or be vibrated; the inclination during movement shall be no more than 45°.

ATTENTION

The appliance shall run continuously once it is started. Generally, the operation of the appliance shall not be nterrupted; otherwise the service life may be impaired.
Foods can be preserved for a couple of hours even in summer in case of power failure; it is recommended to reduce the frequency of opening door.

TROUBLESHOOTING

The following simple issues can be handled by the user. Please call the after-sale service department if the issues are not solved.

Problem	Possible reason
Failed operation	• Check whether the appliance is connected to power or whether the plug is in well contact
	• Check whether the voltage is too low
	• Check whether there is a power failure or partial circuits have tripped
Odor	• Odorous foods shall be tightly wrapped
	• Check whether there is any rotten food
	• Clean the inside of the refrigerator
Long-time operation of the compressor	• Long operation of the refrigerator is normal in summer
	• When the ambient temperature is high it is not suggestible having too much food in the appliance at the same time
	• Food shall get cool before being put into the appliance
	• The doors are opened too frequently
Light fails to get lit	• Check whether the refrigerator is connected to power supply and whether the illuminating light is damaged
	• Have the light replaced by a specialist
Door can not be properly closed	• The door is stuck by food packages
	• The refrigerator is tilted
Loud noises	• Check whether the floor is level and whether the refrigerator is placed stably
	• Check whether accessories are placed at proper locations

Problem	Possible reason
Door seal fails to be tight	• Remove foreign matters on the door seal
	• Heat the door seal and then cool it for restoration (or blow it with an electrical drier or use a hot towel for heating)
Water pan overflows	• There is too much food in the chamber or food stored contains too much water,resulting in heavy defrosting
	• The doors are not closed properly, resulting in frosting due to entry of air and increased water due to defrosting
Hot housing	• Heat dissipation of the built-in condenser via the housing, which is normal When housing becomes hot due to high ambient temperature, storage of too much food or shutdown of the compressor is shut down, provide sound ventilation to facilitate heat dissipation
Surface condensation	• Condensation on the exterior surface and door seals of the refrigerator is normal when the ambient humidity is too high. Just wipe the condensate with a clean towel.
Abnormal noise	• Buzz: The compressor may produce buzzes during operation, and the buzzes are loud particularly upon start or stop. This is normal.
	• Creak: Refrigerant flowing inside of the appliance may produce creak, which is normal.

DISPOSAL AND RECYCLING

Important instructions for environment

Compliance with the WEEE Directive and Disposing of the Waster Product: This product complies with EU WEEE Directive (2012/19/EU). This product bears a classification symbol for waster electrical and electronic equipment (WEEE).

This symbol indicates that this product shall not be disposed with other household wastes at the end of its service life. Used device must be returned to official collection point for recycling of electrical electronic devices. To find these collection systems please contact to your local authorities or retailer where the product was purchased. Each household performs important role in recovering and recycling of old appliance. Appropriate disposal of used appliance helps prevent potential negative consequences for the environment and human health.



Compliance with RoHS Directive

The product you have purchased complies with EU RoHS Directive (2011/65/EU). It does not contain harmful and prohibited materials specified in the Directive.

Package information

Packaging materials of the product are manufactured from recyclable materials in accordance with our National Environment Regulations. Do not dispose of the packaging materials together with the domestic or other wastes. Take them to the packaging material collection points designated by the local authorities.



Criterion® Refrigerator Warranty

Your product is protected by this warranty:

Warranty service must be obtained from Midea Consumer Services or an authorized Midea servicer.

Warranty

- One year full warranty from original purchase date, includes compressor, parts and labor only.

Midea, through its authorized servicers will:

- Pay all costs for repairing or replacing parts of this appliance which prove to be defective in materials or workmanship.

Midea is not responsible for:

- Diagnostics, removal, transportation and reinstallation cost required because of service.
- Costs of service calls that are a result of items listed under **NORMAL RESPONSIBILITIES OF THE CONSUMER****

Midea replacement parts shall be used and will be warranted only for the period remaining on the original warranty.

NORMAL RESPONSIBILITIES OF THE CONSUMER**

This warranty applies only to products in ordinary household use, and the consumer is responsible for the items listed below:

1. Proper use of the appliance in accordance with instructions provided with the product.
2. Routine maintenance and cleaning necessary to keep the good working condition.
3. Proper installation by an authorized service professional in accordance with instructions provided with the appliance and in accordance with all local plumbing, electrical and / or gas codes.
4. Proper connection to a grounded power supply of sufficient voltage, replacement of blown fuses, repair of loosened connections or defects in house wiring.
5. Expenses for making the appliance accessible for servicing.
6. Damages to finish after installation.

EXCLUSIONS

This warranty does not cover the following:

1. Failure caused by damage to the unit while in your possession (other than damage caused by defect or malfunction), by its improper installation, or by unreasonable use of the product, including without limitation, failure to provide reasonable and necessary maintenance or to follow the written Installation and Operating Instructions.
2. Products purchased "as-is" or refurbished are not covered by this warranty.
3. Food loss caused by refrigerator or freezer failure.
4. Service calls to repair or replace consumables such as water filters, light bulbs air filters etc., or handles, knobs and other cosmetic parts.
5. Product that has been transferred from its original owner.
6. Interior or exterior rust on the unit.
7. Damages caused by services performed by persons other than authorized Midea servicers; use of parts other than Midea replacement parts; obtained from persons other than such Midea customer service; or external causes such as abuse, misuse, inadequate power supply or acts of God.
8. Service calls resulting from improper installation of your product.
9. Service calls to instruct you on the use of your product.
10. Surcharges including, but not limited to, any after hour, weekend, or holiday service calls, tolls, ferry trip charges, or mileage expense for service calls to remote areas, including the state of Alaska.
11. If the unit is put to commercial, business, rental, or other use or application other than for consumer use, we make no warranties, express or implied, including but not limited to, any implied warranty of merchantability or fitness for particular use or purpose.
12. Product that has been removed outside the USA or Canada.
13. Products without original serial numbers or products that have serial numbers which have been altered or cannot be readily determined.

Note: Some states do not allow the exclusion or limitation of incidental or consequential damages. So this limitation or exclusion may not apply to you.

IF YOU NEED SERVICE

Keep your bill of sale, delivery slip, and other appropriate payment record.
The date on the bill established the warranty period should service be required.
If service is performed, it is your best interest to obtain and keep all receipts.
This written warranty gives you specific legal rights. You may also have other rights that vary from state to state.
Service under this warranty must be obtained by following these steps, in order:

1. Contact Midea Consumer Services or an authorized Midea servicer at 1-866-646-4332
2. If there is a question as to where to obtain service, contact our consumer relations Department.

Criterion®

Tarjeta de Registracion de producto

Es sencillo! Cumple y envia su Tarjeta de Registracion de Producto hoy!

Nombre

Dirección

Ciudad Estado Código postal

Teléfono (Opcional) / —

Direccion de E-mail (Opcional)

Donde Comprado

Numero de Modelo | Numero de Serie | Mes Dia Ano Fecha de la compra

220250d418 REV 11/04

Porfavor devuelve su Tarjeta de Registracion de Producto hoy!

Criterion®

Product Registration Card

It's simple! Complete and mail your Product Registration Card today!

Name

Address

City State Zip

Phone (Optional) / —

E-mail Address (Optional)

Where Purchased

Model Number | Serial Number | Month Day Year Date of Purchase

220250d418 REV 11/04

Please return your Product Registration Card today!

1-866-646-4332

Garantía

Su producto está protegido por esta garantía:
Su producto está garantizado por Midea. Cualquier obligación de proporcionar servicio o repuestos establecida en esta garantía deberá ser cumplida por los Servicios al consumidor de Midea o por un representante autorizado de Midea.
Para comunicarse con un Representante de Servicio al Cliente, tenga la bondad de llamar por teléfono sin cargo alguno a Midea, al número:

1-866-646-4332

Product Warranty

Your product is protected by this warranty:
Your appliance is warranted by Midea. Any obligations for services and parts under this warranty must be performed by Midea Consumer Services or an authorized Midea servicer
To contact a Customer Service Representative, Call Midea TOLL FREE

Criterion®

CTMR205M1W
CTMR205M1B
CTMR205M1S