FRIGIDAIRE

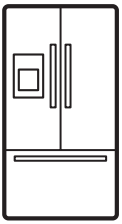

REFRIGERATOR

use & care

Introduction....2
Important Safety Information....3
Features....7
Installation....9
Door Removal....11
Door Handle Installation....16
Water Supply Connection....17
controls and settings....19
Automatic Ice & Water Dispenser....24
Ice Maker....28
Storage Features....30
Storing Food and Saving Energy....36
Normal Operating Sounds....37
Filter Replacement....38
Care & Cleaning....41
Troubleshooting....43
Limited Warranty....48

A22204003 February 2022)

Welcome to our *family*

Thank you for bringing Frigidaire into your home! We see your purchase as the beginning of a long relationship together.

This manual is your resource for the use and care of your product. Please read it before using your appliance. Keep it handy for quick reference. If something doesn't seem right, the troubleshooting section will help you with common issues.

FAQs, helpful tips and videos, cleaning products, and kitchen and home accessories are available at www.frigidaire.com.

We are here for you! Visit our website, chat with an agent, or call us if you need help. We may be able to help you avoid a service visit. If you do need service, we can get that started for you.

Let's make it official! Be sure to register your product.

Keep your product info here so it's easy to find.

Model Number _____

Serial Number _____

Purchase Date _____

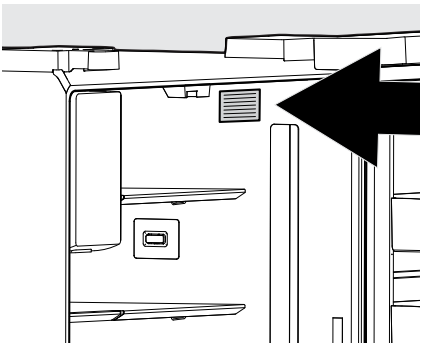

Serial Number Location

Installation Checklist

Doors

- ❒ Handles are secure and tight
- ❒ Door seals completely to cabinet on all sides

Leveling

- ❒ Refrigerator is level side-to-side and slightly elevated in front to assist with door and drawer closing (front should be higher than back)
- ❒ Cabinet is setting solid on all corners

Electrical Power

- ❒ House power turned on
- ❒ Refrigerator plugged in

Ice Maker(s)

- ❒ House water supply connected to refrigerator
  WARNING: Potable water supply only.
- ❒ No water leaks present at all connections - recheck in 24 hours
- ❒ Ice maker(s) is/are turned ON
- ❒ Ice & water dispenser operates correctly

Final Checks

- ❒ Shipping material removed
- ❒ Refrigerator and freezer temperatures set
- ❒ Registration card sent in

WARNING

Please read all instructions before using this appliance.

Safety Definitions

This is the safety alert symbol. It is used to alert of potential personal injury hazards. Obey all safety messages that follow this symbol to avoid possible injury or death.

DANGER

DANGER indicates an imminently hazardous situation which, if not avoided, will result in death or serious injury.

WARNING

WARNING indicates a potentially hazardous situation which, if not avoided, could result in death or serious injury.

CAUTION

CAUTION indicates a potentially hazardous situation which, if not avoided, may result in minor or moderate injury.

IMPORTANT

IMPORTANT indicates installation, operation or maintenance information which is important but not hazard-related.

CAUTION

CAUTION Risk of fire or explosion. Dispose of refrigerator properly in accordance with the applicable federal or local regulations. Flammable refrigerant used.

CAUTION Risk of fire or explosion due to puncture of refrigerant tubing. Follow handling instructions carefully. Flammable refrigerant used.

DANGER

DANGER Risk of fire or explosion. Flammable refrigerant used. Do not use mechanical devices to defrost refrigerator. Do not puncture refrigerant tubing.

DANGER Risk of fire or explosion. Flammable refrigerant used. To be repaired only by trained service personnel. Use only manufacturer-authorized service parts. Any repair equipment used must be designed for flammable refrigerants. Follow all manufacturer repair instructions. Do not puncture refrigerant tubing.

WARNING

CALIFORNIA RESIDENTS ONLY
WARNING! Cancer and Reproductive Harm
www.P65Warnings.ca.gov

Child Safety

Destroy or recycle the carton, plastic bags, and any exterior wrapping material immediately after the refrigerator is unpacked. Children should **NEVER** use these items to play. Cartons covered with rugs, bedspreads, plastic sheets or stretch wrap may become airtight chambers, and can quickly cause suffocation.

Safety Instructions

- DO NOT store or use gasoline, or other flammable liquids in the vicinity of this or any other appliance. Read product labels for warnings regarding flammability and other hazards.
- DO NOT operate the refrigerator in the presence of explosive fumes.
- Avoid contact with any moving parts of automatic ice maker.
- Remove all staples from the carton. Staples can cause severe cuts, and also destroy finishes if they come in contact with other appliances or furniture.

WARNING

Do not use electrical appliances inside the food storage compartments of the appliance unless they are of the type recommended by the manufacturer.

Proper Disposal of your Refrigerator or Freezer

Risk of child entrapment

Child entrapment and suffocation are not problems of the past. Junked or abandoned refrigerators or freezers are still dangerous – even if they will sit for "just a few days". If you are getting rid of your old refrigerator or freezer, please follow the instructions below to help prevent accidents.

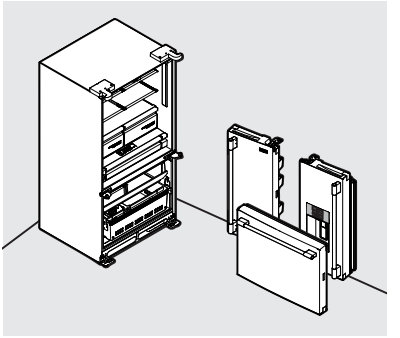

Proper Disposal of Refrigerators/Freezers

We strongly encourage responsible appliance recycling/disposal methods. Check with your utility company or visit www.energystar.gov/recycle for more information on recycling your old refrigerator.

Before you throw away your old refrigerator/freezer:

- Remove doors.
- Leave shelves in place so children may not easily climb inside.
- Have refrigerant removed by a qualified service technician.

IMPORTANT

CFC/HCFC Disposal

Your old refrigerator may have a cooling system that used CFCs or HCFCs (chlorofluorocarbons or hydrochlorofluorocarbons). CFCs and HCFCs are believed to harm stratospheric ozone if released to the atmosphere. Other refrigerants may also cause harm to the environment if released to the atmosphere.

If you are throwing away your old refrigerator, make sure the refrigerant is removed for proper disposal by a qualified technician. If you intentionally release refrigerant, you may be subject to fines and imprisonment under provisions of environmental legislation.

Electrical information

- The refrigerator must be plugged into its own dedicated 115 Volt, 60 Hz., 15 Amp, AC only electrical outlet. The power cord of the appliance is equipped with a three-prong grounding plug for your protection against electrical shock hazards. It must be plugged directly into a properly grounded three-prong receptacle. The receptacle must be installed in accordance with local codes and ordinances. Consult a qualified electrician. Avoid connecting refrigerator to a Ground Fault Interrupter (GFI) circuit. Do not use an extension cord or adapter plug.
- If the power cord is damaged, it should be replaced by an authorized service technician to prevent any risk.
- Never unplug the refrigerator by pulling on the power cord. Always grip the plug firmly, and pull straight out from the receptacle to prevent damaging the power cord.
- Unplug the refrigerator before cleaning to avoid electrical shock.
- Performance may be affected if the voltage varies by 10% or more. Operating the refrigerator with insufficient power can damage the compressor. Such damage is not covered under your warranty.
- Do not plug the unit into an electrical outlet controlled by a wall switch or pull cord to prevent the refrigerator from being turned off accidentally.

IMPORTANT

To turn off power to your refrigerator you must unplug the power cord from the electrical outlet.

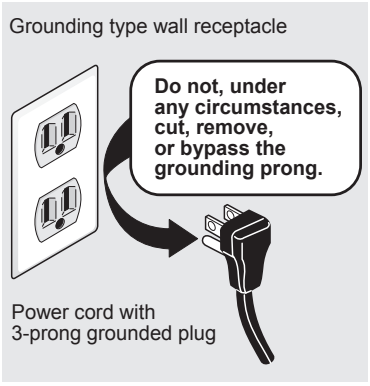

CAUTION

To avoid personal injury or property damage, handle tempered glass shelves carefully. Shelves may break suddenly if nicked, scratched, or exposed to sudden temperature change.

FEATURES

External Water Dispenser Model

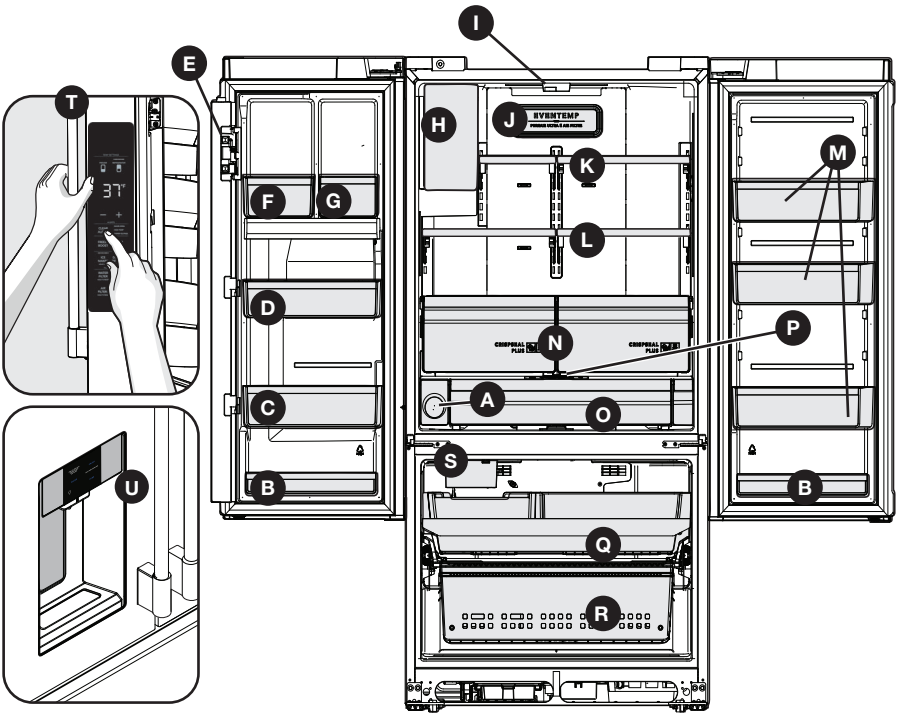

A	Water Filter
B	Condiment Bin
C	L-Shaped Bin
D	Dairy Bin
E	Flipper Mullion
F	Gallon Bin
G	Slim Bin
H	Fresh Food Ice Maker & Bin
I	Flipper Guide
J	Air Filter
K	Slide Under ¼ & ½ width shelves

L	Edge-to-edge Glass Shelving
M	Standard bins
N	Crisper Drawers
O	Adjustable Temp Drawer (ATD)
P	ATD Controls
Q	Upper Freezer Basket
R	Lower Freezer Basket
S	Freezer Ice Maker
T	Side control Display(Functions)
U	External Control Display (Ice/Water)

IMPORTANT

Accessories are available for your appliance and may be purchased at Frigidaire.com or by calling 1-800-374-4432 (Frigidaire.ca or 1-800-265-8352 in Canada) or from an authorized seller.

Internal Water Dispenser Model

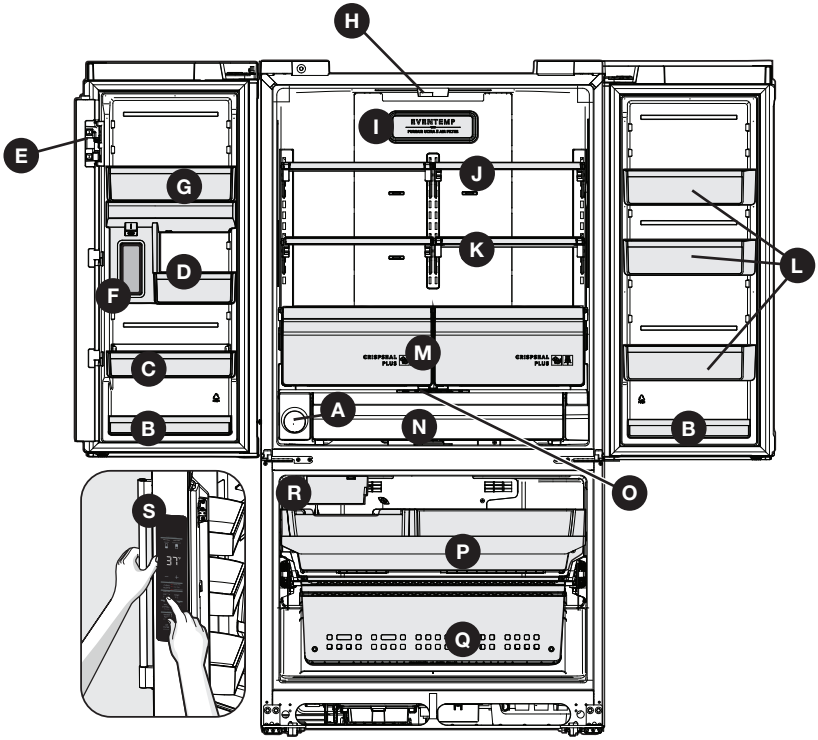

A	Water Filter
B	Condiment Bin
C	L-Shaped Bin
D	Dairy Bin
E	Flipper Mullion
F	Internal Water Dispenser
G	Standard Bin
H	Flipper Guide
I	Air Filter
J	Slide Under ½ width shelves

K	Edge-to-edge Glass Shelving
L	Standard Bin
M	Crisper Drawers
N	Adjustable Temp Drawer (ATD)
O	ATD Controls
P	Upper Freezer Basket
Q	Lower Freezer Basket
R	Freezer Ice Maker
S	Side Control Display

IMPORTANT

Accessories are available for your appliance and may be purchased at Frigidaire.com or by calling 1-800-374-4432 (Frigidaire.ca or 1-800-265-8352 in Canada) or from an authorized seller.

INSTALLATION

Tools Necessary:

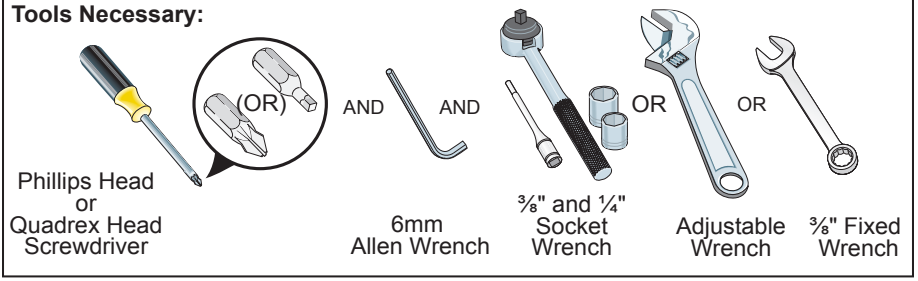

Components Provided:

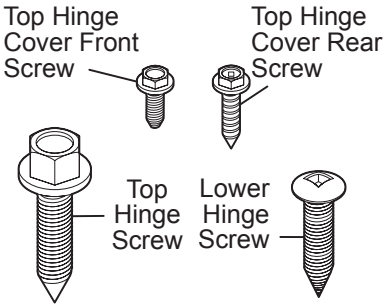

This Use & Care Manual provides general installation and operating instructions for your model. We recommend using a service or kitchen contracting professional to install your refrigerator. Use the refrigerator only as instructed in this Use & Care Manual. **Before starting the refrigerator, follow these important first steps.**

Location

- Choose a place that is near a grounded, non-GFCI, electrical outlet. **Do Not** use an extension cord or an adapter plug.
- If possible, place the refrigerator out of direct sunlight and away from the range, dishwasher, or other heat sources.
- The refrigerator must be installed on a floor that is level and strong enough to support a fully loaded refrigerator.
- Consider water supply availability for models equipped with an automatic ice maker.

WARNING

This appliance is intended for use in residential household and similar interior applications such as:

- Kitchen / Kitchenette
- Pantry Room
- Basement
- Enclosed Garage
- Other interior residential type environments

CAUTION

Do Not install the refrigerator where the temperature will drop below 55°F (13°C) or rise above 110°F (43°C). The compressor will not be able to maintain proper temperatures inside the refrigerator.

WARNING

Installation

Allow the following clearances for ease of installation, proper air circulation, and plumbing and electrical connections:

- Sides & Top ⅜ inch (9.5 mm)
- Back 1 inch (25.4 mm)

NOTE

If your refrigerator is placed with the door hinge side against a wall, you may have to allow additional space so the door can be opened wider.

Door opening

Your refrigerator should be positioned to allow easy access to a counter when removing food. For best use of refrigerator drawers and freezer baskets, the refrigerator should be in a position where both can be fully opened.

Cabinet Leveling & Refrigerator Door Alignment (if necessary)

Guidelines for final positioning of refrigerator:

- All four corners of the cabinet must rest firmly on the floor.
- The front should be slightly elevated to ensure that doors close and seal properly.
- Doors should align with each other and be level.

Most of these conditions can be met by raising or lowering the adjustable front rollers.

To level the cabinet using the front rollers:

1. Slightly open freezer drawer to reveal adjustable rollers at bottom of cabinet.
2. Use the front roller height adjusting screws to make initial cabinet adjustments. Use a 3/8 inch socket wrench to turn the adjustment screws (1 per side).

   To raise unit: Turn adjustment screw clockwise.

   To lower unit: Turn adjustment screw counterclockwise.

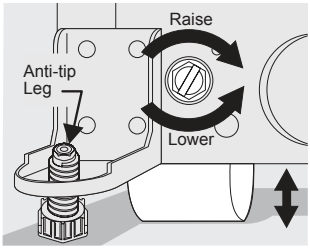

3. Ensure both doors are bind-free with their seals touching the cabinet on all four sides and that cabinet is stable.
4. After unit is leveled, lower the anti-tip leg until it firmly contacts the floor. An adjustable wrench may be necessary for adjustment.

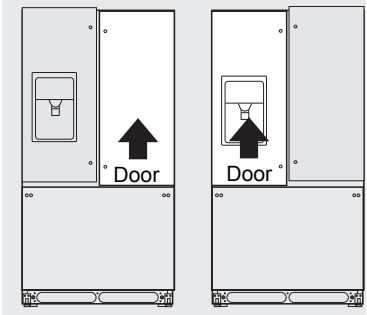

NOTE

Product is shipped with doors adjusted to the lowest position on the hinges.

To make final door height adjustments:

1. Open freezer drawer to access hinges for fresh food doors.
2. Insert 6mm Allen™ wrench into the shaft of the lower hinge. (Included with unit)

   To lower door: turn adjustment screw counter-clockwise if looking at the door from below.

   To raise door: turn adjustment screw clockwise if looking at the door from below.

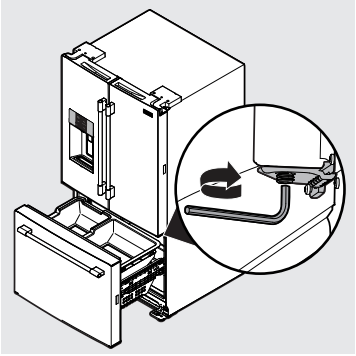

Flipper Mullion

Adjust Flipper Mullion for proper connection with the mullion guide by ensuring the flipper mullion is folded and perpendicular to the fresh food door. If the mullion guide is not in the correct position, it could prevent the door from closing completely.

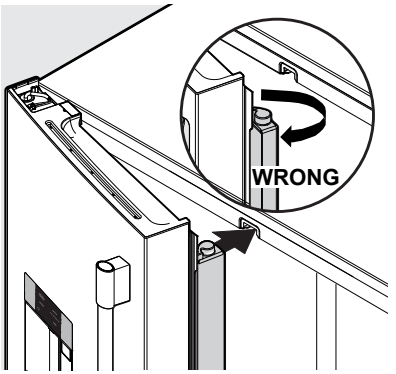

To adjust the flipper mullion:

1. Loosen the two screws located on the flipper mullion hinge.

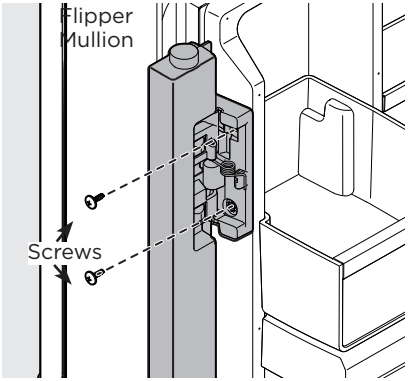

Adjusting Flipper Mullion Screw

2. Adjust flipper mullion height. For proper connection with the flipper mullion guide, there should be a separation about the thickness of a coin (0.060 inches, or 1.5 mm) between the guide and flipper mullion.

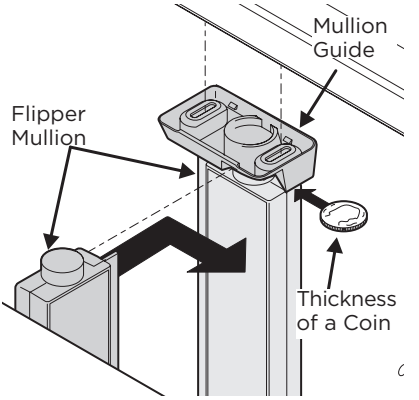

Adjusting Flipper Mullion Height

3. Re-tighten screws.

Getting through narrow spaces

If your refrigerator will not fit through an entrance area, you can remove the doors. Check first by measuring the entrance.

To prepare for removing the doors:

1. Make sure the electrical power cord is unplugged from the wall outlet.
2. Remove any food from the door shelves and close the doors.

WARNING

Make sure the electrical power cord is unplugged from the wall outlet.

To remove refrigerator doors:

1. Remove the three screws from both hinge covers on the left and right top of the cabinet, taking care not to damage electrical connections or sensors.

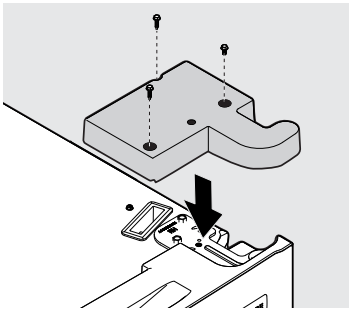

2. After the hinge covers are removed, disconnect any harnesses between the cabinet and doors by grasping both sides of the connector firmly, depress the latch and pull apart.

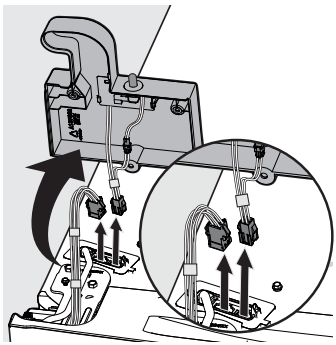

Left Door Dispenser Unit

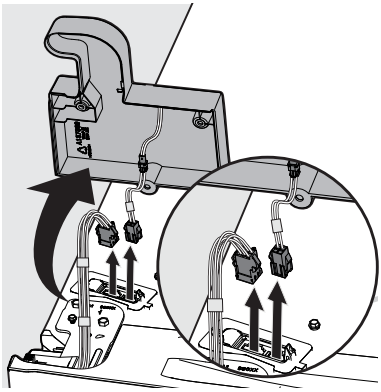

Left Door Non- Dispenser Unit

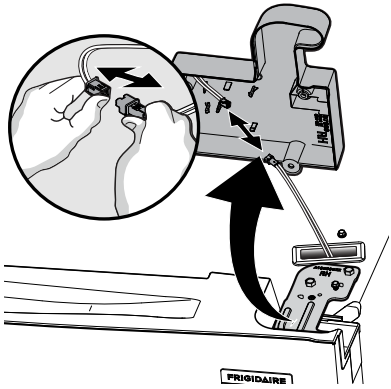

Right Door Dispenser Unit

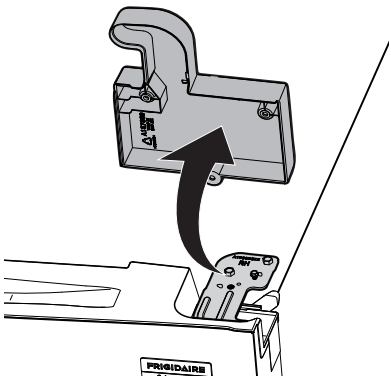

Right Door Non-Dispenser Unit

12 DOOR REMOVAL

3. Trace lightly around the door's top hinges with a pencil. This makes re-installation easier.

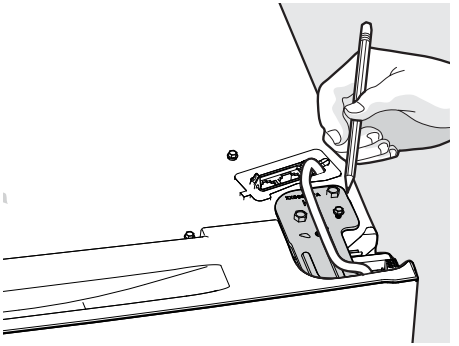

4. Remove bulkhead cover at rear of unit to access water tubing. Disconnect the water tube at the push-lock connection on the rear of the unit below the bulkhead. The dispenser line is connected to the yellow water line coming from the main water valve.

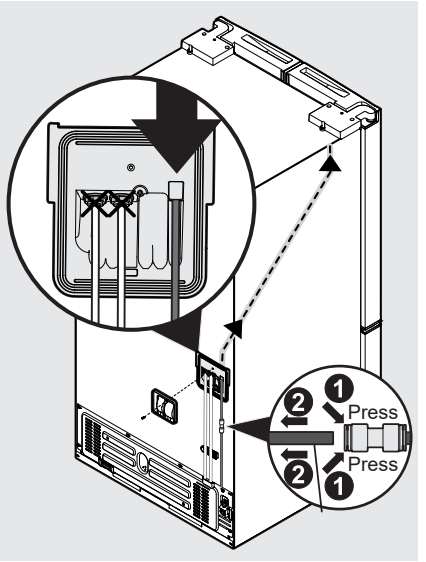

5. Pull the water tube out of the conduit from the top of the cabinet.

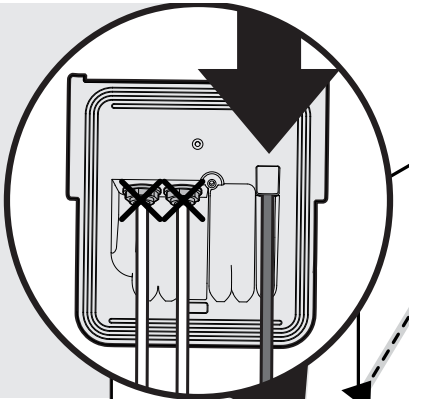

NOTE

You will be pulling approximately five feet of water tube from the back of the refrigerator. Use care while pulling the water tube from the unit to be sure that you do not kink the tube.

6. Open both doors to a 90 degree angle.

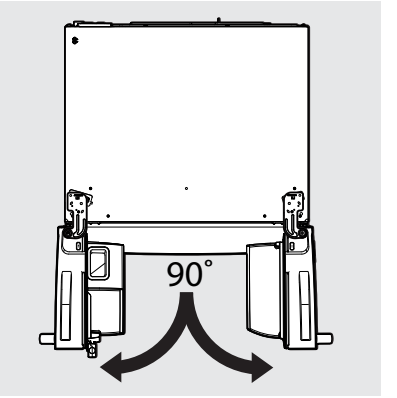

CAUTION

Be sure doors are set aside in a secure position where they cannot fall and cause personal injury, or damage to the doors or handles.

7. Remove hex screws from top hinge plate, then remove the top hinge.

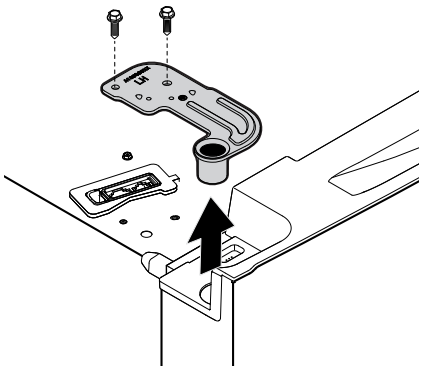

8. Lift doors off bottom hinges and set aside.
9. Unscrew the three bottom hinge screws and remove the bottom hinges.

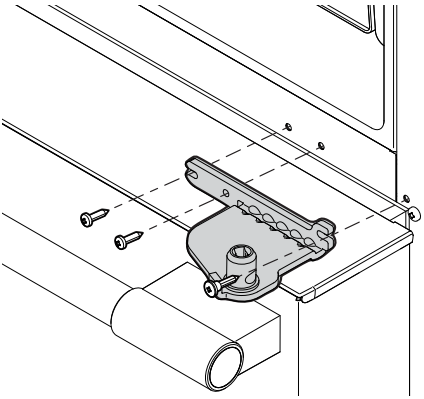

Lower Hinge Removal

To reinstall the refrigerator doors:

1. Replace three bottom hinge screws and hinges on both sides of the cabinet. Ensure screws are tightly snug to hinges on both sides of the cabinet before re-installing doors
2. Holding the door at a 90 degree angle, drop the pin down into the bottom hinge opening. Rotate it slightly in either direction until the door falls onto the hinge and is fully seated.

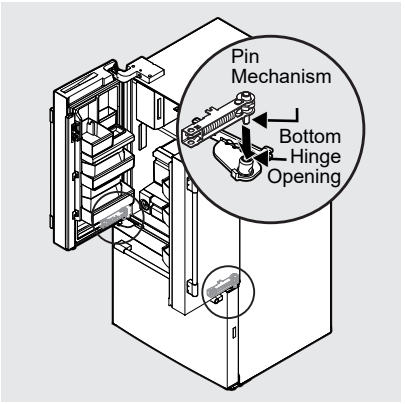

NOTE

When reinserting the water tube and replacing the top hinge cover, use care to be sure you do not kink the tube. The water line may also be difficult to pass back through the conduit inside the cabinet

NOTE

Upon replacement, the tube needs to be fully inserted up to the marking line.

3. Reinstall top hinges and screws.
4. Insert and feed water line back into the conduit at the top left door hinge until tube re-appears at rear of unit.

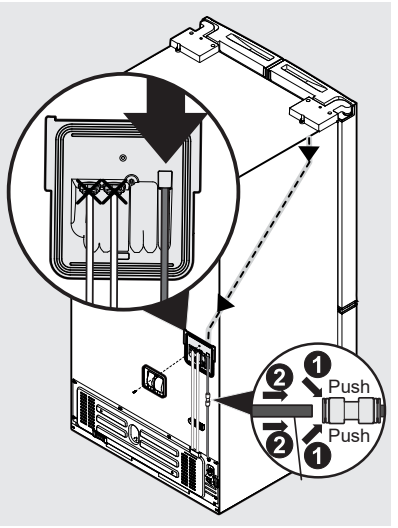

5. Reconnect all harnesses.
6. Replace top hinge covers and screws.
7. Reconnect water line to push-lock connection and reinstall water line bulkhead cover at rear of unit.
8. Reconnect electrical power cord to the wall outlet

To reset door pin:

If doors are removed at less than a 40 degree angle, the pin returns to the home position. It can be reset by turning the door upside down and using a 5/32" Allen wrench to rotate the left hand pin 90 degrees clockwise and the right hand pin 90 degrees counterclockwise.

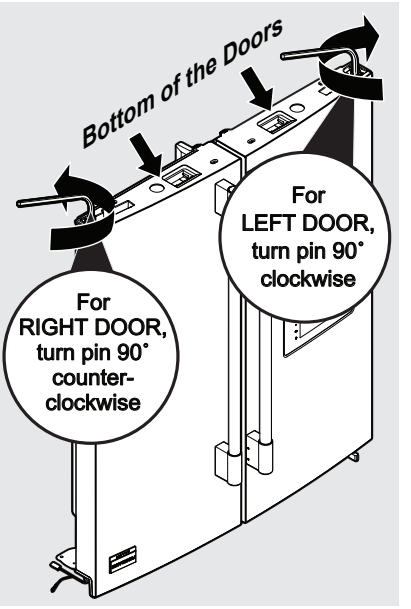

Once the door pins are reset, follow the steps "To reinstall the refrigerator doors".

Removing Freezer Drawer

CAUTION

Drawer is heavy. Use caution when lifting.

1. Remove 4 hex head drawer screws (2 per side) that secure the drawer to the slide assemblies.
2. Lift up drawer to remove.

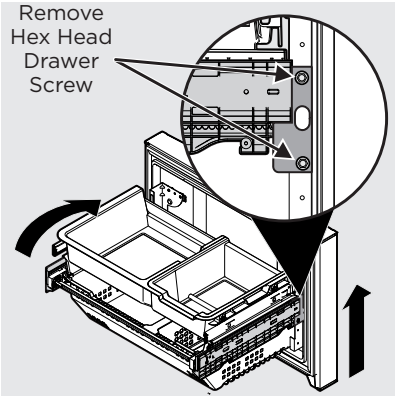

CAUTION

Do Not loosen or remove the 3 hex screws.

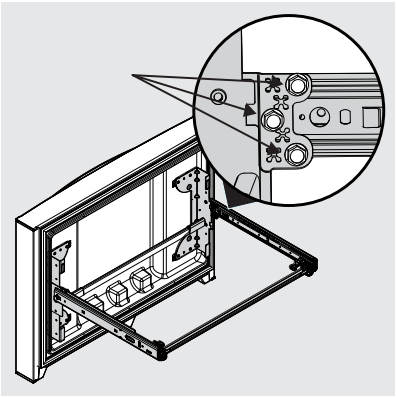

Replacing Freezer Drawer

1. Extend the Freezer slides from the unit.
2. Carefully align support pin with hooks on end of freezer slides and then lower freezer door onto slides.
3. Replace the 4 hex head screws that secure the slides to the door (2 on each side) and tighten.

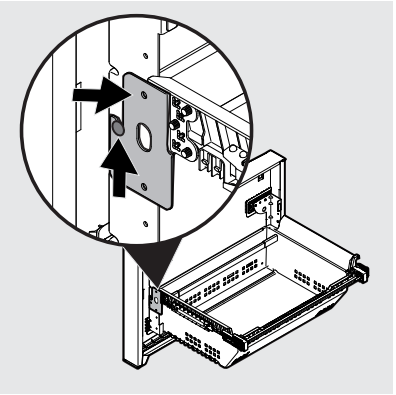

NOTE

To locate the pin, look inside the drawer and the pin is next to the door liner and the slides. Not all parts are shown in the illustration.

16 DOOR HANDLE INSTALLATION

CAUTION

Wear gloves and safety goggles. Use extreme CAUTION when installing these handles.

Door Handle Mounting Instructions

1. Remove handles from carton and any other protective packaging.
2. Position refrigerator handle end over upper and lower pre-installed shoulder bolts (A) that are fastened into door, ensuring the holes for the set screws are facing towards the opposite door.
3. While holding handle firmly against door, fasten further most upper and further most lower Allen set screws (B) with supplied Allen wrench.
4. Repeat steps 2 and 3 to install opposite handle. Ensure the holes for the set screws are facing towards the first door.
5. Firmly tighten the inside Allen set screws.
6. Position freezer handle end over left and right pre-installed handle shoulder bolts (A) that are fastened to the door, ensuring the holes for the set screws are facing down.
7. While holding handle firmly against door, loosely tighten far right Allen set screw (B) with supplied Allen wrench until there is no gap between handle and door.
8. Still holding the handle firmly to the door, firmly tighten far left Allen set screw (B) with supplied Allen wrench.
9. Return to the far right Allen set screw (B) and firmly tighten with supplied Allen wrench.
10. Firmly tighten the inside Allen set screws.

Mounting Refrigerator Handles

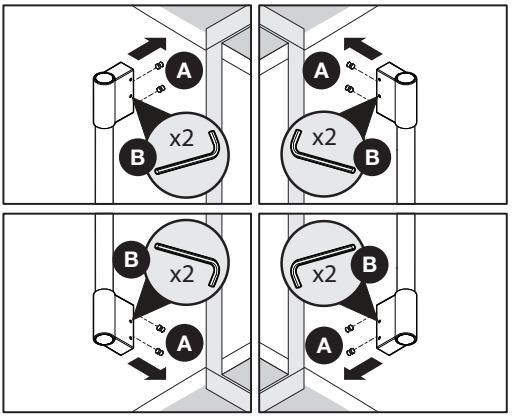

Mounting Freezer Handle

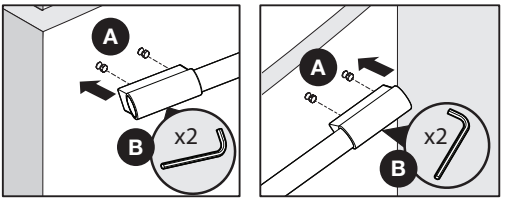

NOTE

When tightening the Allen set screws, it is important that force be applied to the longer arm of the Allen wrench supplied in the handle packaging.

NOTE

All set screws should be tightened so the screw is below the surface of the handle. The handles should be drawn tight to freezer and refrigerator doors with no gaps. Opening the opposite door while tightening the Allen screw makes installation easier.

The door handle may loosen over time or if it was installed improperly. If this happens, tighten the set screws on the handles.

WARNING

To avoid electric shock, which can cause death or severe personal injury, disconnect the refrigerator from electrical power before connecting a water supply line to the refrigerator.

CAUTION

To Avoid Property Damage:

- Copper or Stainless Steel braided tubing is recommended for the water supply line. Water supply tubing made of ¼ inch plastic is **not recommended** to be used. Plastic tubing greatly increases the potential for water leaks, and the manufacturer will not be responsible for any damage if plastic tubing is used for the supply line.
- DO NOT install water supply tubing in areas where temperatures fall below freezing.
- Chemicals from a malfunctioning water softener can damage the ice maker. If your home has a water softening system, ensure the softener is maintained and working properly.

IMPORTANT

Ensure that your water supply line connections comply with all local plumbing codes.

Before Installing The Water Supply Line, You Will Need:

- Basic Tools: adjustable wrench, flat-blade screwdriver, and Phillips™ screwdriver
- Access to a household cold water line with water pressure between 30 and 100 psi.
- A water supply line made of ¼ inch (6.4 mm) OD, copper or stainless steel tubing. To determine the length of tubing needed, measure the distance from the water inlet valve at the back of the refrigerator to your cold water pipe. Then add approximately 6 feet (1.8 meters), so the refrigerator can be moved out for cleaning (as shown).
- A shutoff valve to connect the water supply line to your household water system. DO NOT use a self-piercing type shutoff valve.
- Do not re-use compression fittings or use thread seal tape.
- A compression nut and ferrule (sleeve) for connecting a copper water supply line to the ice maker inlet valve.

NOTE

Check with your local building authority for recommendations on water lines and associated materials prior to installing your new refrigerator. Depending on your local/state building codes, Frigidaire recommends for homes with existing valves its **Smart Choice**® water line kit 5305513409 with a 6 ft. (1.8 meters) Stainless Steel Water Line, and for homes without an existing valve Frigidaire recommends its **Smart Choice**® water line kit 5305510264 with a 20 ft. (6 meters) Copper Water Line with self-tapping saddle valve. Please refer to www.frigidaire.com/store for more information.

To Connect Water Supply Line To Main Water Inlet Valve

1. Disconnect refrigerator from electric power source.
2. Place end of water supply line into sink or bucket. Turn ON water supply and flush supply line until water is clear. Turn OFF water supply at shutoff valve.
3. Remove plastic cap from water valve inlet and discard cap.

WATER SUPPLY CONNECTION

4. If you use copper tubing - Slide brass compression nut, then ferrule (sleeve) onto water supply line. Push water supply line into water valve inlet as far as it will go (¼ inch/6.4 mm). Slide ferrule (sleeve) into valve inlet and finger tighten compression nut onto valve. Tighten another half turn with a wrench; DO NOT over tighten. See Figure 1.

- If you use braided flexible stainless steel tubing - The nut is already assembled on the tubing. Slide nut onto valve inlet and finger tighten nut onto valve. Tighten another half turn with a wrench; DO NOT over tighten. See Figure 2.

5. With steel clamp and screw, secure water supply line to rear panel of refrigerator as shown.
6. Coil excess water supply line (copper tubing only), about 2½ turns, behind refrigerator as shown and arrange coils so they do not vibrate or wear against any other surface. Do not kink tubing.
7. Turn ON water supply at shutoff valve and tighten any connections that leak.
8. Reconnect refrigerator to electrical power source.
9. To turn ice maker on, ensure Ice Maker is enabled on display (LED will be lit) or set the ice maker's On/off power switch to the "ON" position (freezer ice maker).

NOTE

These instructions do not cover after market ice maker installation. Instructions in after market ice maker kit should be used.

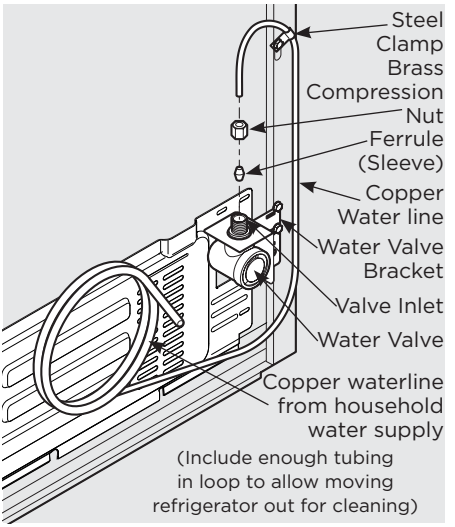

Figure 1

IMPORTANT

Your refrigerator's water supply system includes several tubing lines, a water filter, and a water valve. To ensure that your water dispenser works properly, this system must be completely filled with water when your refrigerator is first connected to the household water supply line.

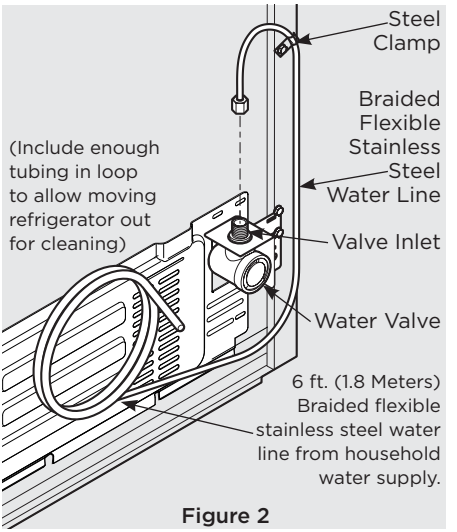

Figure 2

External Water Dispenser Control Display Mode Views

Your display is equipped with a sleep and lock mode to prevent accidental changes to the unit settings during opening and closing of the doors. When both doors are closed, the display will be in sleep mode. When either door is first opened, the display will be in lock mode where all the current settings are visible but dimmed.

Pressing any button on the display will awake the display and a tone will be played. All settings will then be fully lit. Touch the display again to change any setting.

If there is no button pressed for 10 seconds while any door is open, the display will default back to lock mode.

Awake Mode View



Lock Mode View



Sleep Mode View



External Water Dispenser Control Display



1	**Change Temperature**	Select Freezer or Refrigerator icon to change temperature. Press +/- buttons to set the temperature Freezer control range: -6˚F/-21˚C – +6˚F/-15˚C Refrigerator control range: +34˚F/+1˚C – +44˚F/+7˚C
2	**Clear Alerts**	Resets any alarms that are active and illuminated on the display (DOOR OPEN, HIGH TEMP, POWER OUTAGE).
3	**Freeze Boost**	Prior to grocery shopping, we recommend you activate **Freeze Boost** to lower the temperature and freeze food faster. **Freeze Boost** will remain active for up to 24 hours before automatically deactivating or manually exiting by pressing **Freeze Boost** to turn the function off. This will reset the freezer to the previous temperature setting.
4	**F/C**	Touch to toggle display from Fahrenheit to Celsius.
5	**Ice Maker**	Press and hold for 3 seconds to turn ice maker on/off. When indicator is lit, ice maker is on. When indicator is not lit, ice maker is in the OFF state and will stop making ice. While off, ice dispensing can continue as long as there is ice in the bucket. When ice maker is off and ice is dispensing, indicator will blink.
6	**Default Settings**	Press and hold for 3 seconds to reset to Factory settings.
7	**Water Filter**	Press and hold button to reset after filter has been replaced, status shown at right of button will reset to GOOD.
8	**Air Filters**	Press and hold to reset after filter has been replaced, status shown at right of button will reset to GOOD.

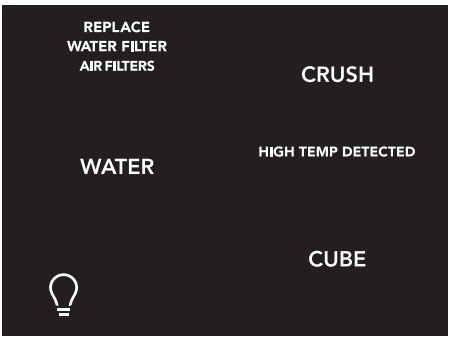

External Water Dispenser Controls

WATER	Press the **WATER** key to select water.
CRUSH	Press the **CRUSH** key to select crushed ice.
CUBE	Press the **CUBE** key to select cubed ice.
light	Toggles dispenser light on and off.

External Water Dispenser Control Display

Clear Alerts

Door Open

If the freezer or refrigerator doors have been left open for five minutes or more, an alarm will sound and the door open indicator will illuminate on the display. Press “CLEAR ALERTS” to reset any system alarms.

High Temp Alarm

HIGH TEMP will illuminate next to clear alerts button. Alarm is played every 60 seconds. Press “CLEAR ALERTS” button to acknowledge the alarm The highest temp value will be displayed when the alarm is first acknowledged.

Power Outage

In the event of a power outage, the power outage alert will be illuminated. Press “CLEAR ALERTS” to acknowledge the alarm. Other modes may be turned off until the alarm is acknowledged. While a power outage alert is displayed on the control panel, the unit will continue normal operation. The high temp alarm may also be illuminated until a safe operating range temperature has been reached.

Flapper (Dispenser Models Only)

When “CUBE” or “CRUSH” is selected, if the flapper (or ice chute door) is being held open by a jammed ice cube, an alarm will sound and the current selection will blink on the dispenser control. The alarm will reset when the ice cube is removed.

NOTE

Food placed within 1 in. in front of air ports may cause food to freeze.

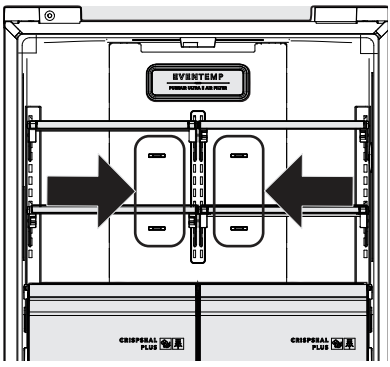

Sabbath Mode

The Sabbath Mode is a feature that disables portions of the refrigerator and its controls in accordance with observance of the weekly Sabbath and religious holidays within the Orthodox Jewish community.

Sabbath Mode is turned ON and OFF by simultaneously pressing and holding both the“**–**” and “**Temp F-C**” for five seconds. The display shows “Sb” while in Sabbath mode.

In the Sabbath Mode, the High Temp alarm is active for health reasons. For example, if the door is left ajar the High Temp alarm is activated. The refrigerator will function normally once the door is closed, without any violation of the Sabbath/Holidays. The High Temp alarm is permitted when cabinet temperature is outside the safe zone for 20 minutes. The alarm silences itself after 10 minutes while the High Temp icon stays lit until the Sabbath mode is exited.

For further assistance, guidelines for proper usage and a complete list of models with the Sabbath feature, please visit the web at **http:\\www.star-k.org**.

NOTE

While in Sabbath Mode, neither the lights, dispenser, nor the control panel will work until Sabbath Mode is deactivated.

Refrigerator stays in Sabbath Mode after power failure recovery. It must be deactivated with the buttons on the control panel.

NOTE

Although you have entered the Sabbath Mode, the ice maker will complete the cycle it had already initiated. The ice cube compartment will remain cold and new ice cubes can be made with standard trays.

Internal Water Dispenser Control Display

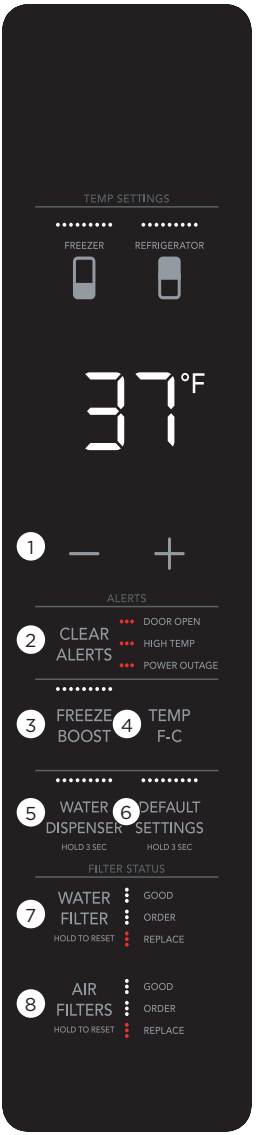

1	**Change Temperature**	Select Freezer or Refrigerator icon to change temperature. Press +/- buttons to set the temperature Freezer control range: -6˚F/-21˚C – +6˚F/-15˚C Refrigerator control range: +34˚F/+1˚C – +44˚F/+7˚C
2	**Clear Alerts**	Resets any alarms that are active and illuminated on the display (DOOR OPEN, HIGH TEMP, POWER OUTAGE).
3	**Freeze Boost**	Prior to grocery shopping, we recommend you activate **Freeze Boost** to lower the temperature and freeze food faster. **Freeze Boost** will remain active for up to 24 hours before automatically deactivating or manually exiting by pressing **Freeze Boost** to turn the function off. This will reset the freezer to the previous temperature setting.
4	**F/C**	Touch to toggle display from Fahrenheit to Celsius.
5	**Water Dispenser**	Press and hold for 3 seconds to turn off and on. When the water dispenser is turned on the LED's above Water Dispenser will be illuminated.
6	**Default Settings**	Press and hold for 3 seconds to reset to Factory settings.
7	**Water Filter**	Press and hold button for 3 seconds to reset status to reset after filter has been replaced, status shown at right of button will reset to GOOD.
8	**Air Filters**	Press and hold button for 3 seconds to reset status to reset after filter has been replaced, status shown at right of button will reset to GOOD.

NOTE

The recommended settings for a product installed in a kitchen is 37˚F for the refrigerator compartment and 0˚F for the freezer.

Setting cooling temperatures

Select compartment where you want to change the temperature by pressing the FREEZER or REFRIGERATOR buttons at the top of the display. Press the + or - buttons to adjust the temperature to the desired setting.

The temperature setting will begin to blink with the first touch. The display will time out after 10 seconds and return to the basic display.

Internal Water Dispenser Control Display

Clear Alerts

Door Open

If the freezer or refrigerator doors have been left open for five minutes or more, an alarm will sound and the door open indicator will illuminate on the display. Press “CLEAR ALERTS” to reset any system alarms.

High Temp Alarm

High temp will illuminate next to clear alerts button. Alarm is played every 60 seconds. Press “CLEAR ALERTS” button to acknowledge the alarm The highest temp value will be displayed when the alarm is first acknowledged.

Power Outage

In the event of a power outage, the power outage alert will be illuminated. Press “CLEAR ALERTS” to acknowledge the alarm. Other modes may be turned off until the alarm is acknowledged. While a power outage alert is displayed on the control panel, the unit will continue normal operation. The high temp alarm may also be illuminated until a safe operating temperature range has been reached.

NOTE

Food placed within 1 in. in front of air ports may cause food to freeze.

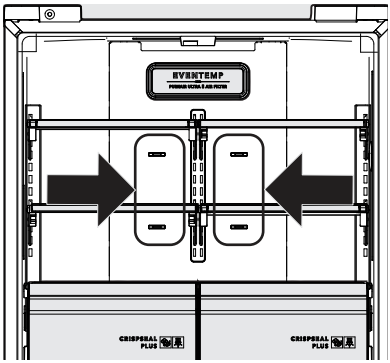

Sabbath Mode

The Sabbath Mode is a feature that disables portions of the refrigerator and its controls in accordance with observance of the weekly Sabbath and religious holidays within the Orthodox Jewish community.

Sabbath Mode is turned ON and OFF by simultaneously pressing and holding both the “**–**” and “**Temp F-C**” for five seconds. The display shows “Sb” while in Sabbath mode.

In the Sabbath Mode, the High Temp alarm is active for health reasons. For example, if the door is left ajar the High Temp alarm is activated. The refrigerator will function normally once the door is closed, without any violation of the Sabbath/Holidays. The High Temp alarm is permitted when cabinet temperature is outside the safe zone for 20 minutes. The alarm silences itself after 10 minutes while the High Temp icon stays lit until the Sabbath mode is exited.

For further assistance, guidelines for proper usage and a complete list of models with the Sabbath feature, please visit the web at **http:\\www.star-k.org**.

NOTE

While in Sabbath Mode, neither the lights, dispenser, nor the control panel will work until Sabbath Mode is deactivated.

Refrigerator stays in Sabbath Mode after power failure recovery. It must be deactivated with the buttons on the control panel.

NOTE

Although you have entered the Sabbath Mode, the ice maker will complete the cycle it had already initiated. The ice cube compartment will remain cold and new ice cubes can be made with standard trays.

External Dispenser -Refrigerator Ice Maker

Priming the water supply system

Using the dispenser after installation

Before making ice for the first time, be sure to prime the water supply system. Air in new plumbing lines can result in two or three empty ice maker cycles. Furthermore, if the system is not flushed, the first ice cubes may have discolored water or have an odd flavor.

CAUTION

For proper dispenser operation, recommended water supply pressure should fall between 30 psi and 100 psi. Excessive pressure may cause the system to malfunction.

1. Begin filling the system by pressing and holding a drinking glass against the water dispenser paddle.
2. Keep the glass in this position until water comes out of the dispenser. It may take about 1½ minutes.
3. Continue dispensing water for about four minutes to flush the system and plumbing connections of any impurities (stopping to empty the glass as necessary).

NOTE

The water dispenser has a built-in device that shuts off the water flow after three minutes of continuous use. To reset this shutoff device, simply release the dispenser paddle.

NOTE

Dispensed water is not chilled. For colder water, add ice to cup or container before dispensing water.

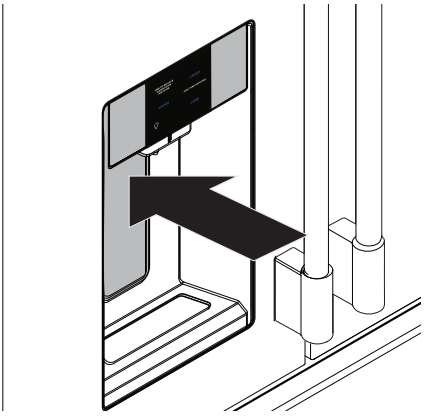

Ice/Water Dispenser

Ice maker operation & care

After the refrigerator is installed properly and has cooled for several hours, the ice maker can produce ice within 24 hours. The ice maker will fill the ice bin from the rear. You must dispense some ice to force the ice forward in the bin. This will allow the bin to fill completely.

Ice Maker and Storage Bin Capacity

In a Standard Depth model, the refrigerator ice maker should produce 3.0 to 3.4 pounds of ice per 24 hours. In a Counter Depth model, the refrigerator ice maker should produce 2.7 to 3.2 pounds of ice per 24 hours.

In a Standard Depth model, the refrigerator ice bin will hold around 5 pounds of ice. In a Counter Depth model, the refrigerator ice bin will hold around 3.7 pounds of ice.

External Dispenser -Refrigerator Ice Maker

Turning the refrigerator ice maker on and off

Ice production is controlled by the ice maker's On/Off feature on the control panel. Pressing the On/Off feature turns the ice maker on & off.

IMPORTANT

Turning off the ice maker simply disables ice making. You will still be able to dispense existing ice, and you will still be able to dispense water.

NOTE

The ice maker also has a built-in plastic signal arm that automatically stops ice production when the ice bin is full. This signal arm should not be used to manually stop the ice maker.

IMPORTANT

Your ice maker is turned on at the factory so it can work as soon as you install your refrigerator. If you cannot connect a water supply, set the ice maker's On/Off feature to Off; otherwise, the ice maker's fill valve may make a loud chattering noise when it attempts to operate without water.

IMPORTANT

On occasion, unusually small ice cubes may be noticed in the bucket or in dispensed ice. This could occur in normal operation of the ice maker. If you start seeing these more frequently, it may be an indication of low water pressure or the water filter needs to be replaced. As the water filter nears the end of its useful life and becomes clogged with particles, less water is delivered to the ice maker during each cycle. Remember, if it's been six months or longer since you last changed your water filter, replace the water filter with a new one. Poor quality household water may require the filter to be changed more frequently.

Ice maker/dispenser tips

- If your refrigerator is not connected to a water supply or the water supply is turned off, turn off the ice maker as described in the previous section.
- The following sounds are normal when the ice maker is operating:
  - Motor running
  - Ice dropping into ice bin
  - Water valve opening or closing
  - Running water
- If you need a large quantity of ice at one time, it is best to get cubes directly from the ice bin.
- Ice cubes stored too long may develop an odd flavor. Empty the ice bin as explained below.
- When dispensing cubed ice, it is normal to have a small quantity of little pieces along with the whole cubes.
- To avoid splashing, dispense ice into your container before adding liquids.
- It is normal for ice to fill to the top of the ice bin.

CAUTION

If the water supply to your refrigerator is softened, be sure the softener is properly maintained. Chemicals from a water softener can damage the ice maker.

External Dispenser -Refrigerator Ice Maker

Cleaning the ice maker

Clean the ice maker and ice bin at regular intervals, especially prior to vacation or moving.

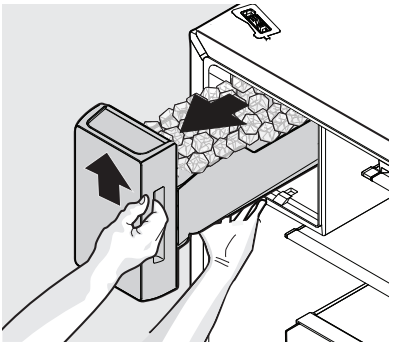

Removing Ice Bin

1. Turn off the ice maker.
2. Lift the ice bin upward then pull straight out to remove.
3. Empty and carefully clean the ice bin with mild detergent. Do not use harsh or abrasive cleaners. Rinse with clean water.
4. Allow the ice bin to dry completely before replacing in the freezer.
5. Replace the ice bin. Turn the ice maker on.

Remove and empty the ice bin if:

- An extended power failure (one hour or longer) causes ice cubes in the ice bin to melt and refreeze together after power is restored, jamming the dispenser mechanism.
- You do not use the ice dispenser frequently. Ice cubes will freeze together in the bin, jamming the dispenser mechanism.

CAUTION

NEVER use an ice pick or similar sharp instrument to break up the ice. This could damage the ice bin and dispenser mechanism.

To loosen stuck ice, use warm water. Before replacing the ice bin, make sure it is completely dry.

IMPORTANT

When removing or replacing the ice bin, avoid rotating the auger in the ice bin. If the auger is accidentally rotated, you must realign the auger by turning it in 45 degree turns (see below) until the ice bin fits into place with the drive mechanism. If the auger is not properly aligned when replacing the ice bin, the refrigerator will not dispense ice. The refrigerator door also may not close properly causing warm air to leak into the refrigerator compartment.

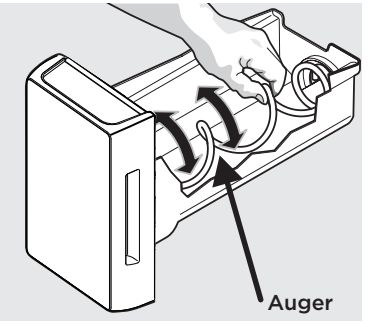

Adjusting Ice Bin Auger

Internal Water Dispenser (select models)

Your refrigerator is equipped with an internal water dispenser mounted inside the cabinet, on the left hand fresh food door.

Using the dispenser after installation



Water dispenser ON



Water dispenser OFF

1. Your appliance will arrive with the water dispenser already activated and ready to use. To disable the water dispenser press and hold the Water Dispenser for 3 seconds, when the LEDs above the Water Dispenser are not lit the water dispensing function is disabled.
2. Place a cup against the paddle and press to dispense water to use the dispenser.

CAUTION

Hold door with one hand while dispensing water to keep door from moving and possible dispensing water on floor.

Priming the water supply system

CAUTION

For proper dispenser operation, recommended water supply pressure should fall between 30 psi and 100 psi. Excessive pressure may cause the system to malfunction.

Before dispensing water for the first time, be sure to prime the water supply system. If the system is not flushed, the first glasses of water may have discolored water or have an odd flavor.

1. Before dispensing, please ensure Water Dispenser is enabled on the display (LEDs above button are lit).
2. Begin filling the system by pressing and holding a drinking glass against the water dispenser paddle.



3. Keep the glass in this position until water comes out of the dispenser. It may take about 1½ minutes.
4. Continue dispensing water for about four minutes to flush the system and plumbing connections of any impurities (stopping to empty the glass as necessary).

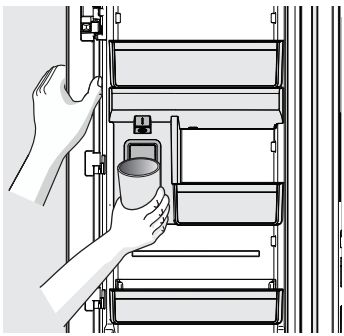

NOTE

If you prefer to keep the internal water dispenser disabled, use the appliance display to disable it. The LEDs will not be illuminated above WATER DISP.

Freezer Ice Maker

Freezer Ice Maker

Ice Maker Operation & Care

After the refrigerator is installed properly, the ice maker can produce ice within 24 hours. When using the ice maker for the first time, and in order for it to work properly, it is necessary to clear air from the water tubing and the filter. Furthermore, if the system is not flushed, the first ice cubes may be discolored or have an odd flavor. Once the ice maker begins making ice, allow the bin to fill completely, then discard the first FULL bin of ice.

Ice Maker and Storage Bin Capacity

This ice maker should produce between 2 and 2.5 pounds of ice per 24 hours depending on usage conditions. For a Standard Depth unit, the ice bin should hold around 12 pounds of ice. For a Counter Depth unit, the ice bin should hold around 9 pounds of ice.

NOTE

The ice maker will only produce the advertised production rate if the product is set at 0°F.

NOTE

The Freezer Ice maker fills from the back left-hand corner of the bin. Moving the ice to the edges of the bin allows the bin to fill completely.

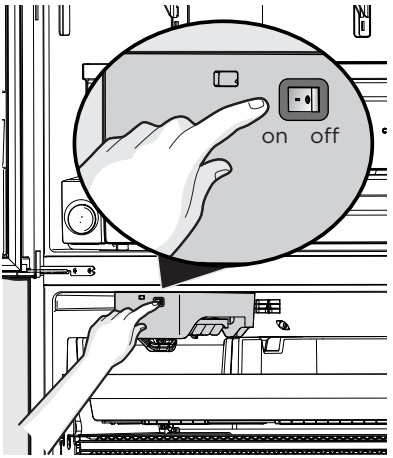

Turning the ice maker on and off

Press power button to turn Ice Maker on (button will not illuminate).

Ice maker tips

- The following sounds are normal when the ice maker is operating:
  - Motor running
  - Ice dropping into ice bin
  - Water valve opening or closing
  - Running water
- Ice cubes stored too long may develop an odd flavor. Empty the ice bin as explained below.

CAUTION

If the water supply to your refrigerator is softened, be sure the softener is properly maintained. Chemicals from a water softener can damage the ice maker.

Freezer Ice Maker

Cleaning the ice maker bin

Clean the ice maker and ice bin at regular intervals, especially prior to vacation or moving.

1. Turn off the ice maker.
2. Remove the ice bin.
3. Empty and carefully clean the ice bin with mild detergent. Do not use harsh or abrasive cleaners. Rinse with clean water.
4. Allow the ice bin to dry completely before replacing in the freezer.
5. Replace the ice bin. Turn the ice maker on.

Remove and empty the ice bin if an extended power failure (one hour or longer) causes ice cubes in the ice bin to melt and refreeze together after power is restored.

CAUTION

NEVER use an ice pick or similar sharp instrument to break up the ice. This could damage the ice bin.

To loosen stuck ice, use warm water. Before replacing the ice bin, make sure it is completely dry.

Shelves

CAUTION

To avoid personal injury or property damage, handle tempered glass shelves carefully. Shelves may break suddenly if nicked, scratched, or exposed to sudden temperature change. Allow the glass shelves to stabilize to room temperature before cleaning. Do not wash in dishwasher.

You can easily adjust shelf positions in the refrigerator compartments to suit your needs. The shelves have mounting brackets that attach to slotted supports at the rear of each compartment.

Change the Position of a Shelf

1. Remove all food from shelf.
2. Lift the front edge up and pull the shelf out.

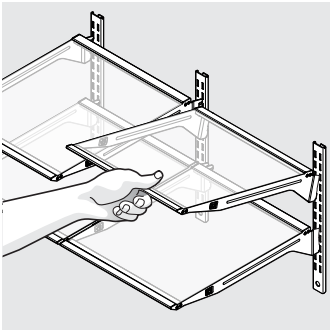

3. Replace by inserting the mounting bracket hooks into the desired support slots.
4. Lower the shelf and lock into position.

To adjust slide-under shelf

1. Push front half shelf backward towards rear of cabinet until the rear half shelf drops down, then gently continue pushing front half shelf back and under the rear half shelf.

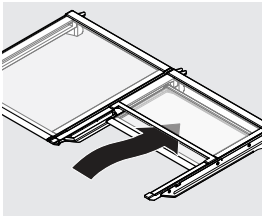

Slide-Under Shelf

Reposition the Air Seal

For glass shelves:

1. Remove air seal by pushing seal straight back.
2. Position the air seal towards the outside edge of the shelf to avoid the air tower when shelf is pushed back into place.
3. Install seal by sliding the open channel end of the seal onto back edge of shelf until seal sits snug on back of shelf and flap sits at about a 10 degree angle from shelf surface.

IMPORTANT

Be aware of the air seal located at the rear of the shelf. Shelves located on the left side should have the air seal mounted on the far left side. Shelves located on the right side should have the air seal mounted on the far right side. This is to ensure there is no interference with the large air tower on the back wall of the cabinet. This also applies to the crisper shelves.

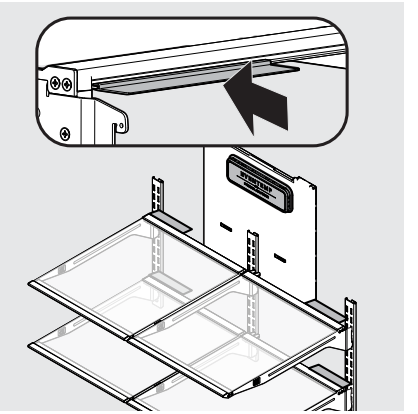

Drawers

Your refrigerator includes a variety of storage drawers.

Crispers

Crisper drawers are designed for storing fruits, vegetables, and other fresh produce.

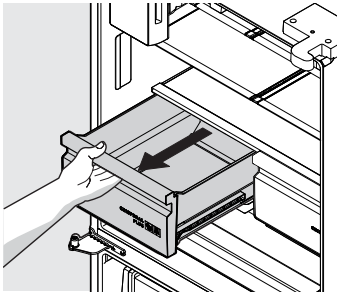

Opening Crisper Drawer

Crisper Humidity Control

Crisper drawers are designed for storing fruits, vegetables, and other fresh produce. Crisper drawers have an auto humidity control on the back of each crisper under the humidity control cover.

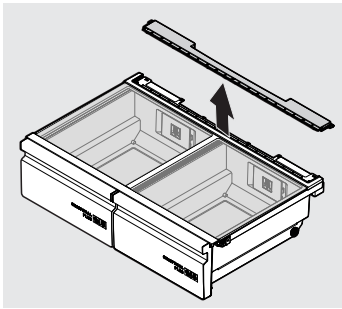

Removing Auto Humidity Control Membrane

NOTE

Frigidaire does not recommend replacing the auto-humidity membrane unless it becomes damaged or ruined. If the membrane becomes soiled, it can be washed with soap and water. Ensure membrane is dry before replacing in unit.

To remove the auto humidity control membrane:

1. Remove crispers, crisper cover divider, and crisper cover from the unit.
2. Remove three screws on the bottom of the crisper cover to release the auto humidity cover,
3. Slide out auto humidity cover from the crisper cover to gain access to the humidity membrane
4. Clean membrane with hot soapy water.
5. Replace membrane and cover by reversing the steps above.

*Pure*Air Produce Keeper™

The crisper drawer ethylene absorbers help to keep food fresher longer in the crisper drawers. See Filter Replacement section for details on how to order replacements.

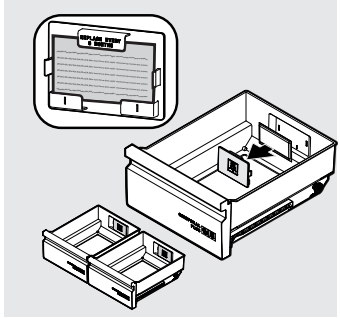

To remove the Crisper Drawer with PureAir Produce Keeper™ for cleaning:

1. Pull the drawer out until it stops.
2. Lift the front slightly and remove the drawer.

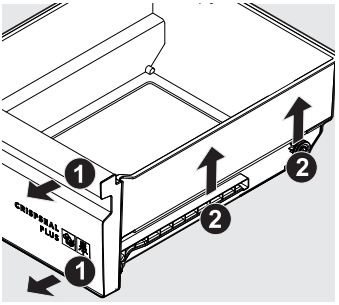

Removing Crisper Drawer

CAUTION

Remove the produce keeper prior to washing the crisper drawer.

To replace the Crisper Drawers with PureAir Produce Keeper™ after cleaning:

1. Place the crisper drawer on top of the deli cover and tilt upwards slightly.

NOTE

Gasket should be on the outside wall of the crisper after being removed and re-installed into the unit.

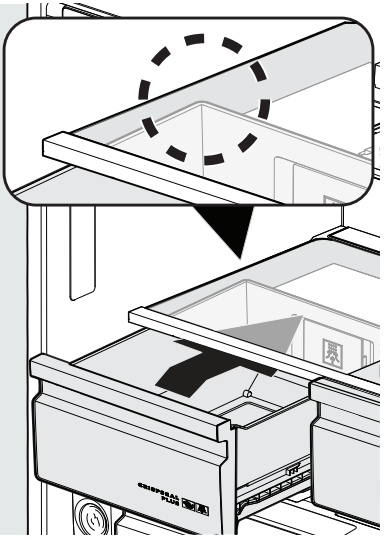

2. Push the crisper straight once the bottom rollers clear the front deli crisper support rollers.

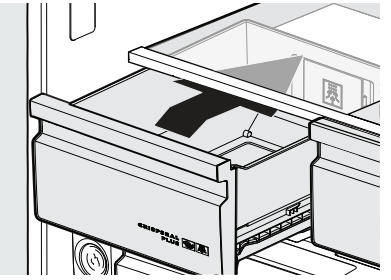

Adjustable Temp Drawer

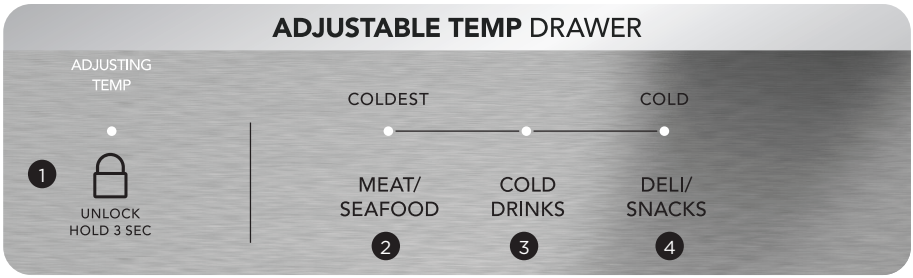

Ideal for storage of deli meats, cheese, and beverages.

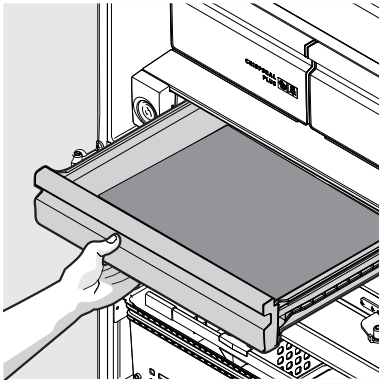

Using your Adjustable Temp Drawer

IMPORTANT

Do not use the Adjustable Temp Drawer to store fresh produce as these items may freeze and cause damage to the fruits and leafy vegetables stored in the drawer.

1. **Lock Control**
The drawer automatically defaults to a locked state to prevent any unwanted use. To change the drawer's settings, it first needs to be unlocked. To unlock, press and hold the UNLOCK icon for 3 seconds. It will automatically lock after 10 seconds without any interaction..

2. **Meat/Seafood Setting**
Select Meat/Seafood for short term storage. Any meat to be kept longer than two days should be frozen. A tone will sound to confirm choice.

3. **Cold Drinks Settings**
Select Cold Drinks when storing individually packaged beverages such as soda cans or juice boxes. A tone will sound to confirm choice.

4. **Deli/Snacks Settings**
Select Deli/Snacks when storing meat and cheeses. A tone will sound to confirm choice.

Doors

Storage bins (varies by model)

The doors to your refrigerator compartment use a system of modular storage bins. All of these bins are removable for easy cleaning. Some of them have fixed positions, while others can be adjusted to your needs.

Door bins are ideal for storing jars, bottles, cans, and large drink containers. They also enable quick selection of frequently used items.

To change the position of an adjustable door bin:

1. Remove all food from door bin.
2. Grip the bin firmly with both hands and lift it upward.
3. Remove the bin.
4. Place the bin just above desired position.
5. Lower the bin onto supports until locked in place.
6. Place bin liner into bin.

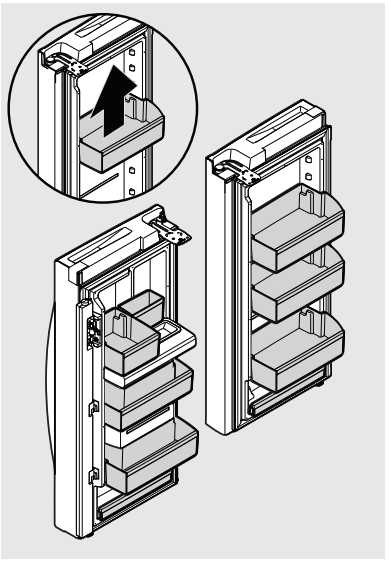

Adjustable Door Bins

Freezer Accessories

Your freezer has baskets and dividers that can be adjusted to your needs.

Remove Upper Freezer Basket

1. Open freezer drawer fully.
2. Extend upper freezer drawer all the way out from the cabinet.

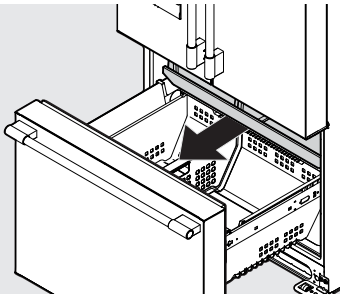

3. Push inward slightly on the basket tabs to release the upper basket from the slide assemblies (1 per side, in front).

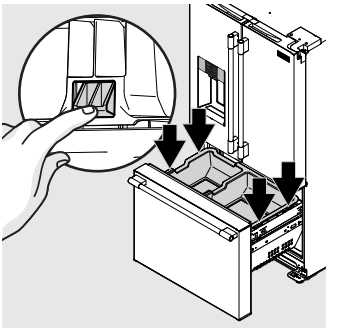

4. Lift basket up and out of freezer compartment.

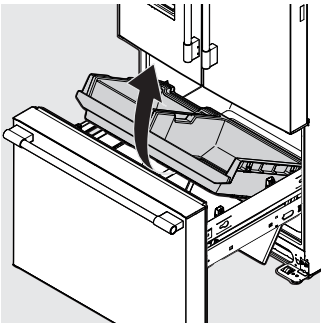

Upper Freezer Basket Replacement

1. Open Freezer drawer completely.

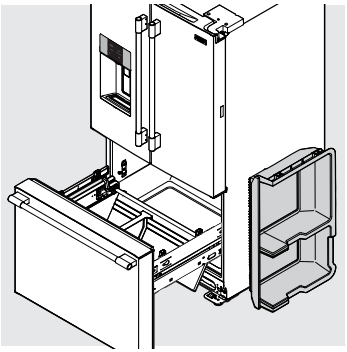

2. Pull both upper slides out of the freezer compartment, extending them fully.
3. Take upper basket assembly and snap basket back into the docks on the slide assemblies. Perform this on one side at a time as slides will move freely during installation.
4. Once basket is fully seated on the upper slide assemblies, push basket back into freezer compartment.

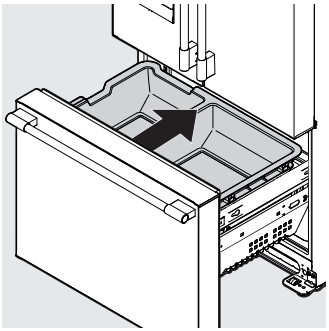

5. Close freezer drawer completely.

To Remove Lower Freezer Basket:

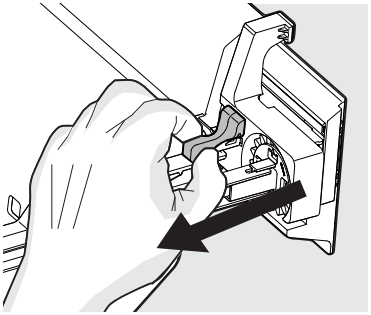

1. Open freezer compartment completely.
2. Locate basket clips in the rear corners of the basket and pull them out to remove.
3. Lift the basket up and remove.

Reverse the steps to reinstall the lower freezer basket.

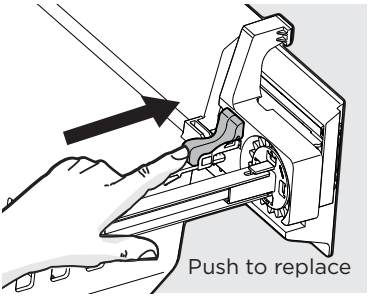

Lower basket Divider

Grab hand hold on lower divider and pull up slightly to slide to next position. (The divider cannot be removed.)

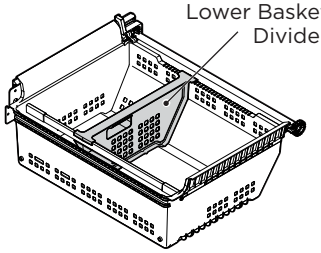

Ideas for storing foods

Refrigerator storage

- Keep the refrigerator compartment between 34°F and 40°F with an optimum temperature of 37°F.
- Avoid overcrowding the refrigerator shelves, which reduces air circulation and causes uneven cooling.
- Avoid placing food in front of air ports. (See Controls Section for illustration.)

Fruits and vegetables

- Store fruits and vegetables in crisper drawers, where trapped moisture helps preserve food quality for longer time periods.
- Wash items and remove excess water.
- Wrap any items that have strong odors or high moisture content.

Meat

- Wrap raw meat and poultry separately and securely to prevent leaks and contamination of other foods or surfaces.
- Use the deli drawer to store meat/poultry for short-term storage. Any meat to be kept longer than two days should be frozen.

Frozen food storage

- Keep the freezer compartment at 0°F or lower.
- A freezer operates most efficiently when it is at least ⅔ full.

Packaging foods for freezing

- To minimize food dehydration and quality deterioration, use aluminum foil, freezer wrap, freezer bags, or airtight containers. Force as much air out of the packages as possible and seal them tightly. Trapped air can cause food to dry out, change color, and develop an off-flavor (freezer burn).
- Wrap fresh meats and poultry with suitable freezer wrap prior to freezing.
- Do not refreeze meat that has completely thawed.

Loading the freezer

- Prior to grocery shopping, activate Freeze Boost so that on your return you can ensure your newly purchased food designated for the freezer will be preserved as quickly as possible.
- Activating Freeze Boost also will help your freezer more efficiently maintain the selected temperature after placing new purchases with pre-existing frozen foods.
- Avoid adding too much warm food to the freezer at one time. This overloads the freezer, slows the rate of freezing, and can raise the temperature of frozen foods.
- Leave a space between packages, so cold air can circulate freely, allowing food to freeze as quickly as possible.

Ideas for saving energy

Installation

- Locate the refrigerator in the coolest part of the room, out of direct sunlight, and away from heating ducts or registers.
- Do not place the refrigerator next to heat-producing appliances such as a range, oven, or dishwasher. If this is not possible, a section of cabinetry or an added layer of insulation between the two appliances will help the refrigerator operate more efficiently.
- Level the refrigerator so that the doors close tightly.

Temperature settings

- Refer to the “Controls” section for procedures on temperature settings.

Food storage

- Avoid overcrowding the refrigerator or blocking cold air vents. Doing so causes the refrigerator to run longer and use more energy.
- Cover foods and wipe containers dry before placing them in the refrigerator. This cuts down on moisture build-up inside the unit.
- Organize the refrigerator to reduce door openings. Remove as many items as needed at one time and close the door as soon as possible.
- Do not place a hot container directly on a cold shelf. Remember, such an extreme temperature change may damage the glass.

NOTE

Energy efficient foam in your refrigerator is not a sound insulator.

NOTE

During automatic defrost cycle, a red glow in the back wall vents of your freezer compartment is normal.

Understanding the sounds you may hear

Your new, high-efficiency refrigerator may introduce unfamiliar sounds. These sounds normally indicate your refrigerator is operating correctly. Some surfaces on floors, walls, and kitchen cabinets may make these sounds more noticeable.

The following is a list of major components in your refrigerator and the sounds they can cause:

A. Evaporator Refrigerant through the evaporator may create a boiling or gurgling sound.

B. Evaporator fan You may hear air being forced through the refrigerator by the evaporator fan.

C. Defrost heater During defrost cycles, water dripping onto the defrost heater may cause a hissing or sizzling sound. After defrosting, a popping sound may occur.

D. Automatic ice maker When ice has been produced, you will hear ice cubes falling into the ice bin. Ice maker fan, water valve activation, and refrigerant gas fluid may create sounds from its operation.

E. Electronic control & automatic defrost control These parts can produce a snapping or clicking sound when turning the cooling system on and off.

F. Condenser fan You may hear air being forced through the condenser.

G. Compressor Modern, high-efficiency compressors run much faster than older models. The compressor may have a high-pitched hum or pulsating sound.

H. Water valve Makes a buzzing sound each time it opens to fill the ice maker.

I. Drain pan (not removable) You may hear water dripping into the drain pan during the defrost cycle.

J. Condenser May create minimal sounds from forced air.

K. Motorized damper May produce a light humming during operation.

L. Ice dispensing paddle When dispensing ice, you will hear a snapping, clicking, or popping sound.

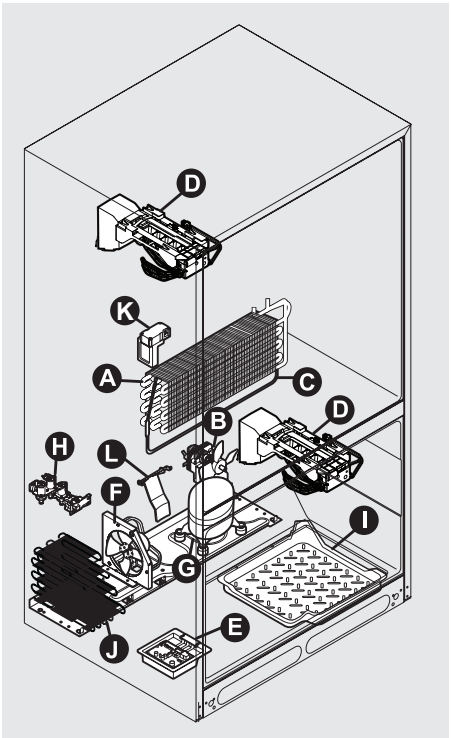

Features vary by model

Air filter

The air filter is located at the top of the air tower.

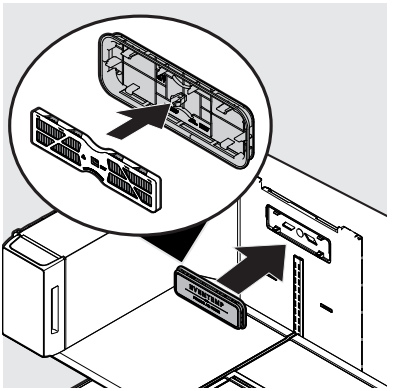

Replacing your PureAir™ AF-2 Air Filter

To ensure optimal filtering of refrigerator odors, you should change the air filter every six months (the filter status light on the main controls prompts you to replace the filter after six months).

To remove and replace the air filter:

1. Place fingers on top of air cover and gently pull towards the front of the unit, releasing the top snaps on the cover from the air tower.
2. Lift bottom snaps up and out of the air tower assembly to disengage and remove the front cover.
3. Press the air filter into snaps on air filter cover to replace.
4. Reinstall the front cover by reversing steps 1 and 2.
5. Press and hold the AIR FILTERS button to reset the status. See CONTROLS and SETTINGS section.

Ordering replacement filters

Order new filters by calling 877-808-4195, online at www.frigidaire.com/store, or through the dealer where you bought your refrigerator. You may want to consider ordering extra filters when you first install your refrigerator.

Air Filter Replacement cartridge, part # **FRGPAAF2**

Locating the Water Filter

Your refrigerator is equipped with water filtering system. The water filter system filters all dispensed drinking water, as well as the water used to produce ice.

The water filter is located at the left side of the Adjustable Temp Drawer.

PurePour™ Water Filter

Keep safe, great-tasting water flowing with a **PurePour™** water filter. Using a **PurePour™** water filter:

- **Makes Safe Water Second Nature**
  PurePour™ water filters are certified to reduce contaminates* and keep great-tasting water flowing for you and your family.
- **Produces Purity You Can Trust**
  Know for certain your **PurePour™** water filter is a protector. Counterfeits and knockoffs put your refrigerator and health at risk. Frigidaire Genuine Filters are the smarter, safer choice.
- **Every Drop Gives Back**
  Partnered on sustainability efforts, the use of a **PurePour™** water filter helps cut back on the cost and use of plastic used to produce and package bottled water

*For the complete list, please see Performance DataSheet on Frigidaire.com

Replacing the Water Filter

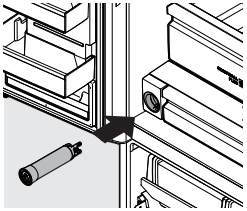

The water filter is located at the bottom left of the refrigerator compartment next to the Adjustable Temp Drawer. In general, you should change the water filter every 6 months to ensure the highest possible water quality. **Water Filter Status** on the user interface prompts you to replace the filter after a standard amount of water (125 gal/453 L for **PurePour™**) has flowed through the system.

If you have not used your refrigerator for a period of time (during moving for example), change the filter before reinstalling the refrigerator.

Ordering Replacement Filters

To order your replacement filters, please visit our online store at frigidaire.com, by calling toll-free at 1 (800) 372-4432, or by visiting the dealer where you purchased your refrigerator. Frigidaire recommends that you order extra filters when you first install your refrigerator, and that you replace your filters at least once every 6 months.

Here are the product numbers to request when ordering:

PurePour™ Water Filter PWF-1
Part# **FPPWFUO1™**

NOTE

When you order your replacement filter, please reorder the same filter type currently in your refrigerator.

More about your Advanced Water Filter

The **PurePour™** ice and water filter system is tested and certified to NSF/ANSI Standards 42, 53, 401 and CSA B483.1 for the reduction of claims specified on the performance data sheet. Visit frigidaire.com for more information.

Do not use with water that is microbiologically unsafe or of unknown quality without adequate disinfection before or after the system. Use systems certified for cyst reduction on disinfected waters that may contain filterable cysts.

Test & certification results:

- Rated Capacity - 125 gal/453 L for **PurePour™** and ice and water filter
- Rated service flow - .50 gal/min.
- Operating Temp.: Min. 33°F, Max. 100°F
- Maximum Rated Pressure - 100 lbs/in.²
- Recommended Minimum Operating Pressure: 30 lbs/in²

Replacing your PurePour™ water filter

It is not necessary to turn the water supply off to change the filter. Be ready to wipe up any small amounts of water released during the filter replacement.

1. Turn **Off** the ice maker(s).
2. Remove the filter by pushing on the end/face of the filter.
3. Slide the old water filter cartridge straight out of the housing and discard it.
4. Unpackage the new filter cartridge. Using the alignment guide, slide it gently into the filter housing until it stops against the snap-in connector at the back of the housing.

5. Push firmly until the cartridge snaps into place (you should hear a click as the cartridge engages the snap-in connector).
6. Press a drinking glass against the water dispenser while checking for any leaks at the filter housing. Any spurts and sputters that occur as the system purges air out of the dispenser system are normal.
7. After filling one glass of water, continue flushing the system for about **4 minutes**.
8. Turn **On** the ice maker(s).
9. Press and hold the **Water Filter** reset button on the Ice & Water Dispenser control panel for 3 seconds. When the display changes from red to green, the status has been reset.

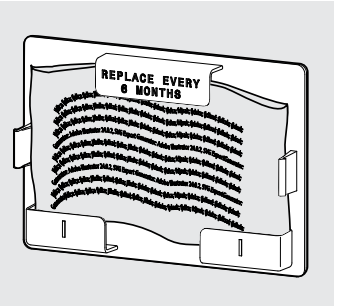

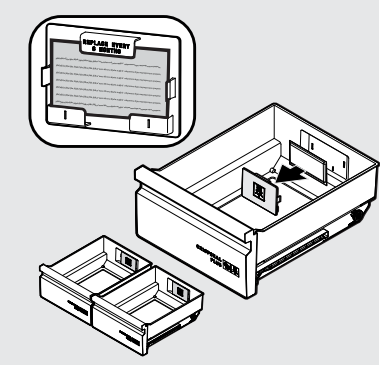

*Pure*Air Produce Keeper™

Keep fruits and vegetables fresher longer with *Pure*Air Produce Keeper™. Our produce keeper absorbs ethylene gas, the natural gas that causes produce to ripen quicker. Reduce food waste, save money and enjoy fresh-tasting produce with a longer storage life.

Ordering Replacement Filters

To order your replacement filters, please visit our online store at frigidaire.com, by calling toll-free at 1 (800) 372-4432, or by visiting the dealer where you purchased your refrigerator. Frigidaire recommends that you replace your filters at least once every 6 months.

Here are the product numbers to request when ordering:

*Pure*Air Produce Keeper™ PK-1

Part # **FRPAPKRF**.

Installing the *Pure*Air Produce Keeper™:

1. Remove the plastic wrapper. Insert unopened packet into the holder in the Crisper Drawer.
2. For optimal results, replace the refill every 6 months along with your air filter.

CAUTION

DO NOT OPEN. Contents may irritate eyes or skin. Keep out of reach of children.
FIRST AID: Contains potassium permanganate. In case of contact with eyes or skin, rinse immediately with water.
DO NOT EAT: If swallowed, seek medical treatment immediately.

Protecting your investment

Keeping your refrigerator clean maintains its appearance and prevents odor build-up.

NOTE

Do not use abrasive cleaners such as window sprays, scouring cleansers, flammable fluids, cleaning waxes, concentrated detergents, bleaches, or cleansers containing petroleum products on plastic parts, interior doors, gaskets, or cabinet liners. Do not use paper towels, scouring pads, or other abrasive cleaning materials.

Wipe up any spills immediately and clean the freezer and refrigerator compartments at least twice a year.

- Never use metallic scouring pads, brushes, abrasive cleaners, or strong alkaline solutions on any surface.
- Never use CHLORIDE or cleaners with bleach to clean stainless steel.

NOTE

If you set your temperature controls to turn off cooling, power to lights and other electrical components will continue until you unplug the power cord from the wall outlet.

- Do not wash any removable parts in a dishwasher.
- Always unplug the electrical power cord from the wall outlet before cleaning.
- Remove adhesive labels by hand. Do not use razor blades or other sharp instruments which can scratch the appliance surface.
- Do not remove the serial plate. Removal of your serial plate voids your warranty.
- Before moving your refrigerator, raise the anti-tip brackets so the rollers will work correctly. This will prevent the floor from being damaged.

Refer to the guide on the next page for details on caring and cleaning specific areas of your refrigerator.

CAUTION

- Pull the refrigerator straight out to move it. Shifting it from side to side may damage flooring. Be careful not to move the refrigerator beyond the plumbing connections.
- Damp objects stick to cold metal surfaces. Do not touch refrigerated surfaces with wet or damp hands.

IMPORTANT

If you store or move your refrigerator in freezing temperatures, be sure to completely drain the water supply system. Failure to do so could result in water leaks when the refrigerator is put back into service. Contact a service representative to perform this operation.

Vacation and moving tips

Occasion	Tips
Short Vacations	• Leave refrigerator operating during vacations of three weeks or less. • Use all perishable items from refrigerator compartment. • Turn automatic ice maker off and empty ice bucket, even if you will only be gone a few days.
Long Vacations	• Remove all food and ice if you will be gone one month or more. • Turn the cooling system off (see "Controls" section for location of On/Off button) and disconnect power cord. • Turn water supply valve to closed position. • Clean interior thoroughly. • Leave both doors open to prevent odors and mold build-up. Block doors open if necessary.
Moving	• Unplug unit • Remove all food and ice. • Recommend use of a handcart, load from the side. • Adjust rollers all the way up to protect them during sliding or moving. • Pad cabinet to avoid scratching surface.

Care & Cleaning Tips		
Part	**What To Use**	**Tips and Precautions**
Interior & Door Liners	• Soap and water • Baking soda and water	Use two tablespoons of baking soda in one quart of warm water. **Be sure to wring excess water out of sponge or cloth before cleaning around controls, light bulb or any electrical part.**
Door Gaskets	• Soap and water	Wipe gaskets with a clean soft cloth.
Drawers & Bins	• Soap and water	Use a soft cloth to clean drawer runners and tracks.
Glass Shelves	• Soap and water • Glass cleaner • Mild liquid sprays	Allow glass to warm to room temperature before immersing in warm water.
Exterior & Handles	• Soap and water • Non Abrasive Glass Cleaner	Do not use commercial household cleaners containing ammonia, bleach or alcohol to clean handles. Use a soft cloth to clean smooth handles. **DO NOT use a dry cloth to clean smooth doors.**
Exterior & Handles **(Stainless Steel Models Only)**	• Soap and water • Stainless Steel Cleaners	**Never use CHLORIDE or cleaners with bleach to clean stainless steel.** Clean stainless steel front and handles with non-abrasive soapy water and a dishcloth. Rinse with clean water and a soft cloth. Use a non-abrasive stainless steel cleaner. These cleaners can be purchased at most home improvement or major department stores. Always follow manufacturer's instructions. Do not use household cleaners containing ammonia or bleach. **NOTE: Always clean, wipe and dry with the grain to prevent scratching.** Wash the rest of the cabinet with warm water and mild liquid detergent. Rinse well, and wipe dry with a clean soft cloth.

Let us help you troubleshoot your concern! This section will help you with common issues. If you need us, visit our website, chat with an agent, or call us. We may be able to help you avoid a service visit. If you do need service, we can get that started for you!

1-800-374-4432 (United States)
Frigidaire.com

1-800-265-8352 (Canada)
Frigidaire.ca

Concern	Potential Cause	Common Solution
Automatic Ice Maker		
Ice maker is not making any ice.	• Ice maker is turned off.	• Turn on ice maker. For the refrigerator ice maker, press and hold the Ice Maker On-Off button on your display. For the freezer ice maker, turn the ice maker on by pressing the toggle switch on the (-) side.
	• Refrigerator is not connected to water line or water valve is not open.	• Connect the unit to the household water supply and ensure the water valve is open.
	• The water supply line is kinked.	• Ensure that the supply line does not kink when the refrigerator is pushed into place against the wall.
	• The water filter is not seated properly.	• Remove and re-install the water filter. Be sure to seat it fully into the locked position.
	• The water filter may be clogged with foreign material.	• If water dispenses slowly or not at all, or if the filter is six months old or older, it should be replaced.
	• Ice maker bail arm is being held up by an item not allowing it to go in the on or down position.	• Move any item or frozen ice cubes that may block the bail arm from being in the on or down position. Additionally, the ice bin itself may be out of position so that it prevents the bail arm from dropping all the way down. Be sure the bin is pushed all the way to the rear of the shelf. See Automatic Ice Maker-Freezer section in manual.

Concern	Potential Cause	Common Solution
Automatic Ice Maker (Cont'd)		
Ice maker is not making enough ice.	• Ice maker is producing less ice than you expect. • The water filter may be clogged with foreign material. • The water supply line is kinked. • Saddle valve on cold water pipe is clogged or restricted by foreign material. • Heavy traffic, opening or closing of the doors excessively. • Freezer control is set too warm (freezer ice maker). • Water pressure is extremely low. Cut-off and cut-on pressures are too low (well systems only). • Reverse osmosis system is in regenerative phase.	• The freezer ice maker will produce approximately 2.0 to 2.5 LBS and the refrigerator ice maker will produce 3.0 to 3.2 LBS every 24 hours depending on usage conditions. • If water dispenses slower than normal, or if the filter is six months old or older, it should be replaced. • Ensure that the supply line does not kink when the refrigerator is pushed into place against the wall. • Turn off household water line valve. Remove valve. Clean valve. Replace valve if necessary. • Press Quick Freeze/Freeze Boost to temporarily increase ice production rate. (Freezer ice maker only.) • Set freezer control to colder setting to improve performance of the ice maker (freezer ice maker). Allow 24 hours for temperature to stabilize. • Have someone turn up the cut-off and cut-on pressure on the water pump system (well systems only). • It is normal for a reverse osmosis system to be below 20 psi during the regenerative phase.
Freezer ice maker will not stop making ice (select models).	• Ice maker bail arm is being held down by a package in the freezer that has fallen against ice maker.	• Move any item or frozen ice cubes that may block the bail arm from being in the off or upward position. See Automatic Ice Maker-Freezer section in manual.
Ice cubes are freezing together.	• Ice cubes are not being used frequently enough or interruption of power for prolonged time. • Ice cubes are hollow (shells of ice with water inside). The hollow cubes break open in the bin and leak their water onto existing ice, which causes it to freeze together.	• Remove ice container and discard ice. The ice maker will produce fresh supply. Ice should be used at least twice weekly to keep the cubes separated. • This generally occurs when the ice maker does not get enough water. This is usually the result of a clogged water filter or restricted water supply. Replace the water filter and if the condition still occurs check for a clogged Saddle Valve, water valve not turned on all the way or kinked water supply line.

Concern	Potential Cause	Common Solution
Dispenser (Ice & Water)		
Dispenser will not dispense ice.	• There is no ice in the bin to be dispensed. • The refrigerator doors are not completely closed. • Dispenser paddle has been pressed too long and the dispenser motor has overheated.	• See the “Ice maker is not making any ice” section above. • Be sure the refrigerator doors are completely closed. • The motor overload protector will reset in about three minutes and then ice can be dispensed.
Ice dispenser is jammed.	• Ice has melted and frozen around auger due to infrequent use, temperature fluctuations, and/or power outages. • Ice cubes are jammed between ice maker and back of ice container.	• Remove ice container, thaw, and empty the contents. Clean container, wipe dry, and replace in proper position. When new ice is made, dispenser should operate. • Remove ice cubes that are jamming the dispenser.
Dispenser will not dispense water.	• Water filter not seated properly. • Water filter is clogged. • Household water line valve is not open.	• Remove and reinstall the water filter. For PurePour, be sure to push the filter in all the way until it clicks into place and is secured inside of the water filter housing. • Replace filter cartridge. Be sure to push filter all the way in until it clicks into place and is secured inside of the water filter housing. • Open household water line valve. See CONCERN column AUTOMATIC ICE MAKER.
Water not cold enough.	• The water dispensing system is not designed to chill water.	• Add ice to cup or container before dispensing water.
Water has an odd taste and/or odor.	• Water has not been dispensed for an extended period of time. • Unit not properly connected to cold water line.	• Draw and discard 10-12 glasses of water to freshen the supply. • Connect unit to cold water line that supplies water to the kitchen faucet.

Concern	Potential Cause	Common Solution
Opening/Closing Of Doors/Drawers		
Door(s) will not close.	• Door was closed too hard, causing other door to open slightly. • Refrigerator is not level. It rocks on the floor when moved slightly. • Refrigerator is touching a wall or cabinet.	• Close both doors gently. • Ensure floor is level and solid, and can adequately support the refrigerator. Contact a carpenter to correct a sagging or sloping floor. • Ensure floor is level and solid, and can adequately support the refrigerator. Contact a carpenter to correct a sagging or sloping floor.
Drawers are difficult to move.	• Food is touching shelf on top of drawer. • Track that drawers slide on is dirty.	• Remove top layer of items in drawer. • Ensure drawer is properly installed on track. • Clean drawer, rollers, and track. See Care & Cleaning.
Running of Refrigerator		
Compressor does not run.	• Freezer control is set to "OF". • Refrigerator is in defrost cycle. • Plug at electrical outlet is disconnected. • House fuse blown or tripped circuit breaker. • Power outage.	• Set freezer control. • This is normal for a fully automatic defrost refrigerator. The defrost cycle occurs periodically, lasting about 30 minutes. • Ensure plug is tightly pushed into outlet. • Check/replace fuse with a 15 amp time-delay fuse. Reset circuit breaker. • Check house lights. Call local electric company.
Refrigerator seems to run too much or too long.	• Your variable speed compressor is designed to run 100% of the time except during the defrost cycle. At times it will run faster, such as after a defrost cycle.	• It is normal for the compressor to run continuously except during defrost mode.
Digital Temperature Setting Display		
Digital temperature displays an error.	• Electronic control system has detected a performance problem.	• Call your Electrolux service representative, who can interpret any messages or number codes flashing on the digital displays.

Concern	Potential Cause	Common Solution
Water/Moisture/Frost Inside Refrigerator		
Moisture collects on inside of refrigerator walls.	• Weather is hot and humid. • Flipper mullion	• The rate of frost buildup and internal sweating increases. • Adjust flipper mullion. (See “To adjust the flipper mullion” in the Installation section.)
Water collects on bottom side of drawer cover.	• Vegetables contain and give off moisture.	• It is not unusual to have moisture on the bottom side of the cover. Move humidity control (some models) to lower setting.
Water collects in bottom of drawer.	• Washed vegetables and fruit drain while in the drawer.	• Water collecting in bottom of drawer is normal. Dry items before putting them in the drawer or store produce in tightly sealed bags to help reduce condensation inside of the drawer.
Water/Moisture/Frost Outside Refrigerator		
Moisture collects on outside of refrigerator or between doors.	• Weather is humid.	• This is normal in humid weather. When humidity is lower, the moisture should disappear.
Food in Fresh Food Compartment		
Food is freezing.	• Temperature setting is too low. • Temperature sensor is covered by food (right side of fresh food area). • Food is covering the air ports.	• Move the setting to a higher degree. • Allow space for air flow to the sensor. • Allow space between the air ports and the food.

48 LIMITED WARRANTY

Your appliance is covered by a one year limited warranty. For one year from your original date of purchase, Electrolux will pay all costs for repairing or replacing any parts of this appliance that prove to be defective in materials or workmanship when such appliance is installed, used and maintained in accordance with the provided instructions.

Exclusions

This warranty does not cover the following:

1. Products with original serial numbers that have been removed, altered or cannot be readily determined.
2. Product that has been transferred from its original owner to another party or removed outside the USA or Canada.
3. Rust on the interior or exterior of the unit.
4. Products purchased “as-is” are not covered by this warranty.
5. Food loss due to any refrigerator or freezer failures.
6. Products used in a commercial setting.
7. Service calls which do not involve malfunction or defects in materials or workmanship, or for appliances not in ordinary household use or used other than in accordance with the provided instructions.
8. Service calls to correct the installation of your appliance or to instruct you how to use your appliance.
9. Expenses for making the appliance accessible for servicing, such as removal of trim, cupboards, shelves, etc., which are not a part of the appliance when it is shipped from the factory.
10. Service calls to repair or replace appliance light bulbs, air filters, water filters, other consumables, or knobs, handles, or other cosmetic parts.
11. Surcharges including, but not limited to, any after hour, weekend, or holiday service calls, tolls, ferry trip charges, or mileage expense for service calls to remote areas, including the state of Alaska.
12. Damages to the finish of appliance or home incurred during installation, including but not limited to floors, cabinets, walls, etc.
13. Damages caused by: services performed by unauthorized service companies; use of parts other than genuine Electrolux parts or parts obtained from persons other than authorized service companies; or external causes such as abuse, misuse, inadequate power supply, accidents, fires, or acts of God.

DISCLAIMER OF IMPLIED WARRANTIES; LIMITATION OF REMEDIES

CUSTOMER’S SOLE AND EXCLUSIVE REMEDY UNDER THIS LIMITED WARRANTY SHALL BE PRODUCT REPAIR OR REPLACEMENT AS PROVIDED HEREIN. CLAIMS BASED ON IMPLIED WARRANTIES, INCLUDING WARRANTIES OF MERCHANTABILITY OR FITNESS FOR A PARTICULAR PURPOSE, ARE LIMITED TO ONE YEAR OR THE SHORTEST PERIOD ALLOWED BY LAW, BUT NOT LESS THAN ONE YEAR. ELECTROLUX SHALL NOT BE LIABLE FOR CONSEQUENTIAL OR INCIDENTAL DAMAGES SUCH AS PROPERTY DAMAGE AND INCIDENTAL EXPENSES RESULTING FROM ANY BREACH OF THIS WRITTEN LIMITED WARRANTY OR ANY IMPLIED WARRANTY. SOME STATES AND PROVINCES DO NOT ALLOW THE EXCLUSION OR LIMITATION OF INCIDENTAL OR CONSEQUENTIAL DAMAGES, OR LIMITATIONS ON THE DURATION OF IMPLIED WARRANTIES, SO THESE LIMITATIONS OR EXCLUSIONS MAY NOT APPLY TO YOU. THIS WRITTEN WARRANTY GIVES YOU SPECIFIC LEGAL RIGHTS. YOU MAY ALSO HAVE OTHER RIGHTS THAT VARY FROM STATE TO STATE.

If You Need Service

Keep your receipt, delivery slip, or some other appropriate payment record to establish the warranty period should service be required. If service is performed, it is in your best interest to obtain and keep all receipts. Service under this warranty must be obtained by contacting Electrolux at the addresses or phone numbers below.

This warranty only applies in the USA and Canada. In the USA, your appliance is warranted by Electrolux Major Appliances North America, a division of Electrolux Home Products, Inc. In Canada, your appliance is warranted by Electrolux Canada Corp. Electrolux authorizes no person to change or add to any obligations under this warranty. Obligations for service and parts under this warranty must be performed by Electrolux or an authorized service company. Product features or specifications as described or illustrated are subject to change without notice.

USA
1-800-374-4432
Frigidaire
10200 David Taylor Drive
Charlotte, NC 28262

Electrolux

Canada
1.800.265.8352
Electrolux Canada Corp.
5855 Terry Fox Way
Mississauga, Ontario, Canada
L5V 3E4

FRIGIDAIRE

welcome *home*

Our home is your home. Visit us if you need help with any of these things:

 owner support

 accessories

 service

 registration

(See your registration card for more information.)

Frigidaire.com
1-800-374-4432

Frigidaire.ca
1-800-265-8352