Refrigerator

User manual

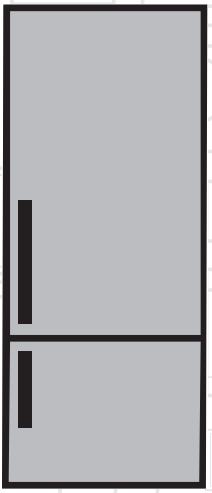

CN 151120
CN 151120 X
CN151140ZW
CN151140DZX

CN151140ZX
BBM505X

EN |

beko

Please read this manual first!

Dear Customer,

We hope that your product, which has been produced in modern plants and checked under the most meticulous quality control procedures, will provide you an effective service.

For this, we recommend you to carefully read the entire manual of your product before using it and keep it at hand for future references.

This manual

- Will help you use your appliance in a fast and safe way.
- Read the manual before installing and operating your product.
- Follow the instructions, especially those for safety.
- Keep the manual in an easily accessible place as you may need it later.
- Besides, read also the other documents provided with your product.

Please note that this manual may be valid for other models as well.

Symbols and their descriptions

This instruction manual contains the following symbols:

ⓘ Important information or useful tips.

⚠ Warning against dangerous conditions for life and property.

⚠ Warning against electric voltage.

CONTENTS

1 Refrigerator 3

2 Important Safety Warnings 4

Intended use 4
General safety 4
For products with a 8
water dispenser; 8
Child safety 9
Compliance with WEEE Directive and Disposing of the Waste Product: 9
Package information 9
HC warning 9
Things to be done for energy saving 10
Recommendations for the fresh food compartment 10

3 Installation 11

Points to be considered when re-transporting your refrigerator 11
Before operating your refrigerator 11
Electric connection 11
Adjusting the legs 12
Changing the illumination lamp 12
Disposing of the packaging 12
Disposing of your old refrigerator 12
Placing and Installation 12
Water connection 13
Connecting the water hose to the refrigerator 13
Connecting of the water hose to the cold water mains line 14
Water filter 15
Mounting the external filter onto the wall 15

4 Preparation 16

5 Using your refrigerator 17

Indicator Panel 17
Indicator panel 19
Door Open Warning 24
Dual cooling system: 24
Freezing fresh food 24
Recommendations for preservation of frozen food 25
Defrosting 25
Placing the food 25
Deep-freeze information 26
Water dispenser 26
Water tray 28
Egg section 29
Blue light 29
Rotary storage container 29
Movable Body shelf: 30
Icematic and ice storage container .. 31
Ice Machine 31
Description and cleaning of odor filter 32
Humidity Controlled Crisper 33
(FreSHelf) 33

6 Maintenance and cleaning 34

Protection of plastic surfaces 34

7 Troubleshooting 35

8 Beko Customer Care 38

1 Refrigerator

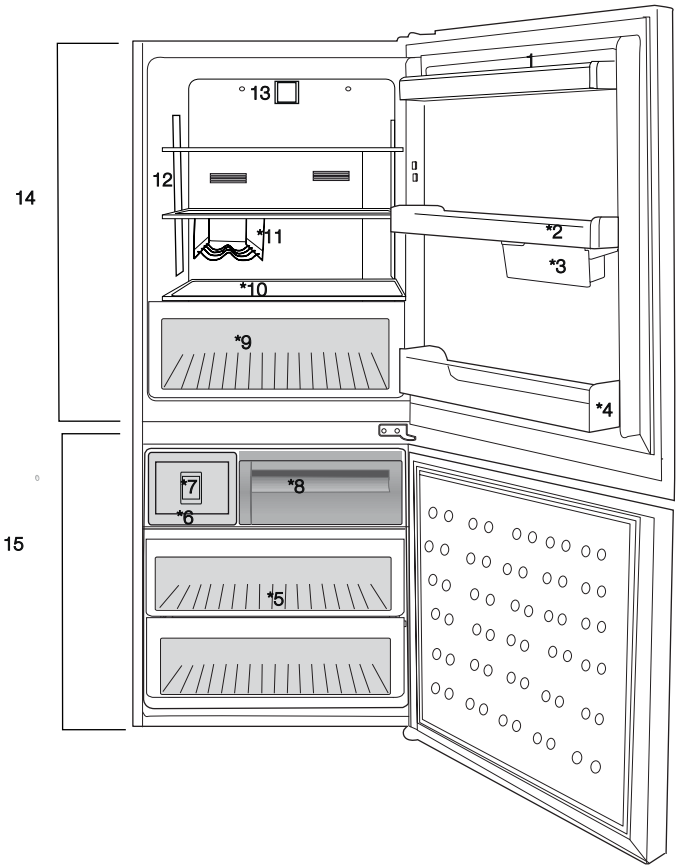

1. Egg holder
2. Fridge compartment shelf
3. Sliding and Rotary storage containers
4. Bottle shelf
5. Freezer compartment drawers
6. Ice container
7. Ice machine
8. Drawer
9. Crisper
10. Adjustable glass shelves
11. Bottle holder
12. Illumination lens
13. Fan
14. Fridge compartment
15. Freezer compartment

***OPTIONAL**

Figures that take place in this instruction manual are schematic and may not correspond exactly with your product. If the subject parts are not included in the product you have purchased, then it is valid for other models.

2 Important Safety Warnings

Please review the following information. Failure to observe this information may cause injuries or material damage. Otherwise, all warranty and reliability commitments will become invalid.

Intended use

This product is intended to be used

- indoors and in closed areas such as homes;
- in closed working environments such as stores and offices;
- in closed accommodation areas such as farm houses, hotels, pensions.
- It should not be used outdoors.

General safety

- When you want to dispose/scrap the product, we recommend you to consult the authorized service in order to learn the required information and authorized bodies.
- Consult your authorized service for all your questions and problems related to the refrigerator. Do not intervene or let someone intervene to the refrigerator without notifying the authorised services.
- For products with a freezer compartment; Do not eat cone ice cream and ice cubes immediately after you take them out of the freezer compartment! (This may cause frostbite in your mouth.)
- For products with a freezer compartment; Do not put bottled and canned liquid beverages in the freezer compartment. Otherwise, these may burst.
- Do not touch frozen food by hand; they may stick to your hand.
- Unplug your refrigerator before cleaning or defrosting.

- Vapor and vaporized cleaning materials should never be used in cleaning and defrosting processes of your refrigerator. In such cases, the vapor may get in contact with the electrical parts and cause short circuit or electric shock.
- Never use the parts on your refrigerator such as the door as a means of support or step.
- Do not use electrical devices inside the refrigerator.
- Do not damage the parts, where the refrigerant is circulating, with drilling or cutting tools. The refrigerant that might blow out when the gas channels of the evaporator, pipe extensions or surface coatings are punctured causes skin irritations and eye injuries.
- Do not cover or block the ventilation holes on your refrigerator with any material.
- Electrical devices must be repaired by only authorised persons. Repairs performed by incompetent persons create a risk for the user.
- In case of any failure or during a maintenance or repair work, disconnect your refrigerator's mains supply by either turning off the relevant fuse or unplugging your appliance.
- Do not pull by the cable when pulling off the plug.
- Ensure highly alcoholic beverages are stored securely with the lid fastened and placed upright.
- Never store spray cans containing flammable and explosive substances in the refrigerator.
- Do not use mechanical devices or other means to accelerate the defrosting process, other than those recommended by the manufacturer.

- This product is not intended to be used by persons with physical, sensory or mental disorders or unlearned or inexperienced people (including children) unless they are attended by a person who will be responsible for their safety or who will instruct them accordingly for use of the product
- Do not operate a damaged refrigerator. Consult with the service agent if you have any concerns.
- Electrical safety of your refrigerator shall be guaranteed only if the earth system in your house complies with standards.
- Exposing the product to rain, snow, sun and wind is dangerous with respect to electrical safety.
- Contact authorized service when there is a power cable damage to avoid danger.
- Never plug the refrigerator into the wall outlet during installation. Otherwise, risk of death or serious injury may arise.
- This refrigerator is intended for only storing food items. It must not be used for any other purpose.
- Label of technical specifications is located on the left wall inside the refrigerator.
- Never connect your refrigerator to electricity-saving systems; they may damage the refrigerator.
- If there is a blue light on the refrigerator, do not look at the blue light with optical tools.
- For manually controlled refrigerators, wait for at least 5 minutes to start the refrigerator after power failure.
- This operation manual should be handed in to the new owner of the product when it is given to others.
- Avoid causing damage on power cable when transporting the

refrigerator. Bending cable may cause fire. Never place heavy objects on power cable. Do not touch the plug with wet hands when plugging the product

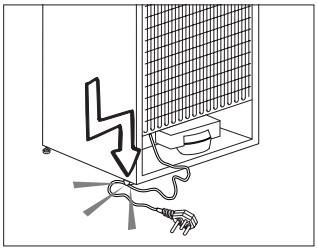

- Do not plug the refrigerator if the wall outlet is loose.
- Water should not be sprayed on inner or outer parts of the product for safety purposes.
- Do not spray substances containing inflammable gases such as propane gas near the refrigerator to avoid fire and explosion risk.
- Never place containers filled with water on top of the refrigerator; in the event of spillages, this may cause electric shock or fire.
- Do not overload the refrigerator with food. If overloaded, the food items may fall down and hurt you and damage refrigerator when you open the door.
- Never place objects on top of the refrigerator; otherwise, these objects may fall down when you open or close the refrigerator's door.
- As they require a precise temperature, vaccines, heat-sensitive medicine and scientific materials and etc. should not be kept in the refrigerator.
- If not to be used for a long time, refrigerator should be unplugged. A possible problem in power cable may cause fire.
- The plug's tip should be cleaned regularly with a dry cloth; otherwise, it may cause fire.
- Refrigerator may move if adjustable legs are not properly secured on the floor. Properly securing adjustable legs on the floor can prevent the refrigerator to move.

- When carrying the refrigerator, do not hold it from door handle. Otherwise, it may be snapped.
- When you have to place your product next to another refrigerator or freezer, the distance between devices should be at least 8cm. Otherwise, adjacent side walls may be humidified.
- The product shall never be used while the compartment which is located at the top or back of your product and in which electronic boards are available (electronic board box cover) (1) is open.

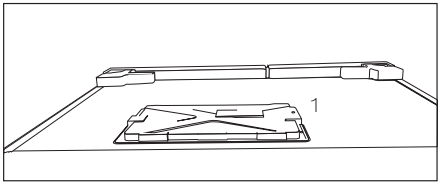

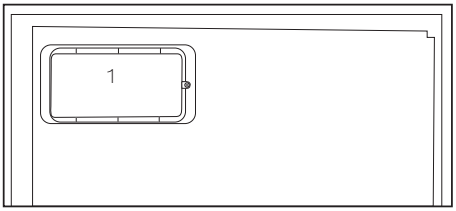

For products with a water dispenser;

- Pressure for cold water inlet shall be maximum 120 psi (8 bar). If your water pressure exceeds 80 psi (5.5 bar), use a pressure limiting valve in your mains system. If you do not know how to check your water pressure, ask for the help of a professional plumber.
- If there is risk of water hammer effect in your installation, always use a water hammer prevention equipment in your installation. Consult Professional plumbers is you are not sure that there is no water hammer effect in your installation.
- Do not install on the hot water inlet. Take precautions against of the risk of freezing of the hoses. Water temperature operating interval shall be 33°F (0.6°C) minimum and 100°F (38°C) maximum.

- Use only potable water.

Child safety

- If the door has a lock, the key should be kept away from reach of children.
- Children must be supervised to prevent them from tampering with the product.

Compliance with WEEE Directive and Disposing of the Waste Product:



This product complies with EU WEEE Directive (2012/19/EU). This product bears a classification symbol for waste electrical and electronic equipment (WEEE).

This product has been manufactured with high quality parts and materials which can be reused and are suitable for recycling. Therefore, do not dispose the product with normal domestic waste at the end of its service life. Take it to a collection point for the recycling of electrical and electronic equipment. Please consult your local authorities to learn the nearest collection point. Help protect the environment and natural resources by recycling used products. For children's safety, cut the power cable and break the locking mechanism of the door, if any, so that it will be non-functional before disposing of the product.

Package information

Packaging materials of the product are manufactured from recyclable materials in accordance with our National Environment Regulations. Do not dispose of the packaging materials together with the domestic or other wastes. Take them to the packaging material collection points designated by the local authorities.

Do not forget...

Any recycled substance is an indispensable matter for nature and our national asset wealth.

If you want to contribute to the re-evaluation of the packaging materials, you can consult to your environmentalist organizations or the municipalities where you are located.

HC warning

If your product's cooling system contains R600a:

This gas is flammable. Therefore, pay attention to not damaging the cooling system and piping during usage and transportation. In the event of damage, keep your product away from potential fire sources that can cause the product catch a fire and ventilate the room in which the unit is placed.

Ignore this warning if your product's cooling system contains R134a.

Type of gas used in the product is stated in the type label which is on the left wall inside the refrigerator.

Never throw the product in fire for disposal.

Recommendations for the fresh food compartment

***May not be available in all models**

Do not allow the food to touch the temperature sensor in fresh food compartment. To allow the fresh food compartment keep its ideal storage temperature, sensor must not be hindered by food.

Do not place hot foods in the product.

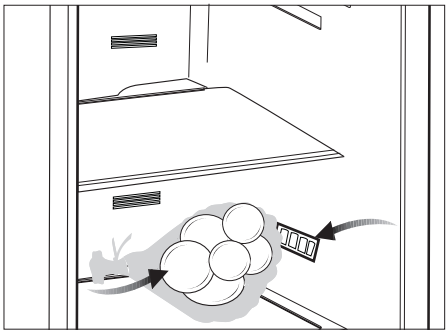

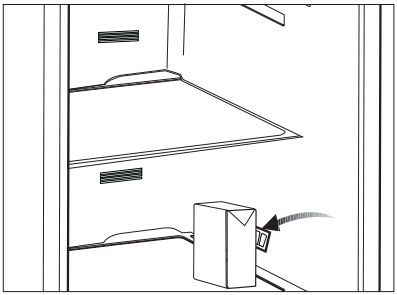

Things to be done for energy saving

- Do not leave the doors of your refrigerator open for a long time.
- Do not put hot food or drinks in your refrigerator.
- Do not overload your refrigerator so that the air circulation inside of it is not prevented.
- Do not install your refrigerator under direct sunlight or near heat emitting appliances such as ovens, dishwashers or radiators. Keep your refrigerator at least 30cm away from heat emitting sources and at least 5cm from electrical ovens.
- Pay attention to keep your food in closed containers.
- For products with a freezer compartment; You can store maximum amount of food items in the freezer when you remove the shelf or drawer of the freezer. Energy consumption value stated for your refrigerator has been determined by removing freezer shelf or drawer and under maximum load. There is no harm to use a shelf or drawer according to the shapes and size of food to be frozen.
- Thawing frozen food in fridge compartment will both provide energy saving and preserve the food quality.

3 Installation

⚠ Please remember that the manufacturer shall not be held liable if the information given in the instruction manual is not observed.

Points to be considered when re-transporting your refrigerator

1. Your refrigerator must be emptied and cleaned prior to any transportation.
2. Shelves, accessories, crisper and etc. in your refrigerator must be fastened securely by adhesive tape against any jolt before repackaging.
3. Packaging must be tied with thick tapes and strong ropes and the rules of transportation printed on the package must be followed.

Please do not forget…

Every recycled material is an indispensable source for the nature and for our national resources.

If you wish to contribute to recycling the packaging materials, you can get further information from the environmental bodies or local authorities.

Before operating your refrigerator

Before starting to use your refrigerator check the following:

1. Is the interior of the refrigerator dry and can the air circulate freely in the rear of it?
2. Please keep 50 mm distance between the backside of the refrigerator and the wall"
3. Clean the interior of the refrigerator as recommended in the "Maintenance and cleaning" section.
4. Plug the refrigerator into the wall outlet. When the fridge door is open, the fridge compartment interior light will come on.
5. You will hear a noise as the compressor starts up. The liquid and gases sealed within the refrigeration system may also give rise to noise, even if the compressor is not running and this is quite normal.
6. Front edges of the refrigerator may feel warm. This is normal. These areas are designed to be warm to avoid condensation.

Electric connection

Connect your product to a grounded socket which is being protected by a fuse with the appropriate capacity.

Important:

- The connection must be in compliance with national regulations.
- The power cable plug must be easily accessible after installation.
- The specified voltage must be equal to your mains voltage.
- Extension cables and multiway plugs must not be used for connection.

⚠ A damaged power cable must be replaced by a qualified electrician.

⚠ Product must not be operated before it is repaired! There is danger of electric shock!

Disposing of the packaging

The packing materials may be dangerous for children. Keep the packing materials out of the reach of children or dispose of them by classifying them in accordance with the waste instructions. Do not dispose of them along with the normal household waste.

The packing of your refrigerator is produced from recyclable materials.

Disposing of your old refrigerator

Dispose of your old refrigerator without giving any harm to the environment.

- You may consult your authorised dealer or waste collection center of your municipality about the disposal of your refrigerator.

Before disposing of your refrigerator, cut out the electric plug and, if there are any locks on the door, make them inoperable in order to protect children against any danger.

Placing and Installation

⚠ If the entrance door of the room where the refrigerator will be installed is not wide enough for the refrigerator to pass through, then call the authorised service to have them remove the doors of your refrigerator and pass it sideways through the door.

1. Install your refrigerator to a place that allows ease of use.

2. Keep your refrigerator away from heat sources, humid places and direct sunlight.

3. There must be appropriate air ventilation around your refrigerator in order to achieve an efficient operation. If the refrigerator is to be placed in a recess in the wall, there must be at least 50 mm distance with the ceiling and at least 50 mm with the wall. If the floor is covered with a carpet, your product must be elevated 25 mm from the floor.

4. Place your refrigerator on an even floor surface to prevent jolts.

Adjusting the legs

If your refrigerator is unbalanced;

You can balance your refrigerator by turning its front legs as illustrated in the figure. The corner where the leg exists is lowered when you turn in the direction of black arrow and raised when you turn in the opposite direction. Taking help from someone to slightly lift the refrigerator will facilitate this process.

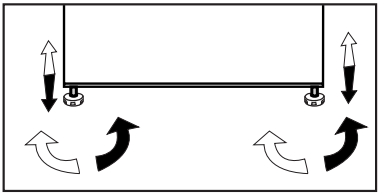

Changing the illumination lamp

To change the Bulb/LED used for illumination of your refrigerator, call your AuthorisedService.

The lamp(s) used in this appliance is not suitable for household room illumination. The intended purpose of this lamp is to assist the user to place foodstuffs in the refrigerator/freezer in a safe and comfortable way.The lamps used in this appliance have to withstand extreme physical conditions such as temperatures below -20 °C. (only chest and upright freezer)

Water connection

Depending on the model of the refrigerator, you can connect it either to a demijohn or water mains.

First you must connect the water hose to the refrigerator.

In cases where a demijohn is used, a separate pump must also be used.

WARNING: Refrigerator and the pump, if any, must be unplugged during connection.

Following parts may not be supplied with your product since they are not required when using a demijohn.

Check that following parts have been delivered together with the product:

1.Union for connecting the water hose to the rear of the refrigerator

2.3 pieces of pipe clips (used to secure the water hose)

3.5-meter long water hose (1/4 inch in diameter)

4.Cold mains water valve with mesh filter (tap adapter)

5.External water filter. (If there is a demijohn connection; it is not necessary to use a water filter.)

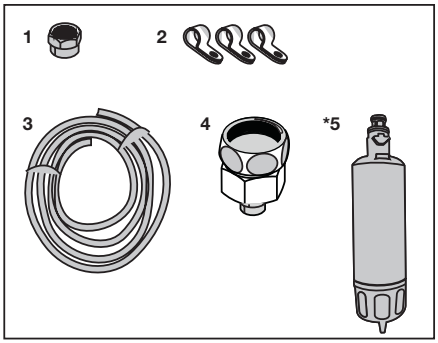

Connecting the water hose to the refrigerator

1.Slip the union (b) onto the water hose (a).

2.Push the water hose downwards firmly to slip it onto the water inlet valve (c).

3.Tighten the union (c) by hand to secure it onto the water inlet valve.

Normally, you are not required to tighten the union with a tool. However, you can use a spanner or pliers to tighten the union if there is a leakage.

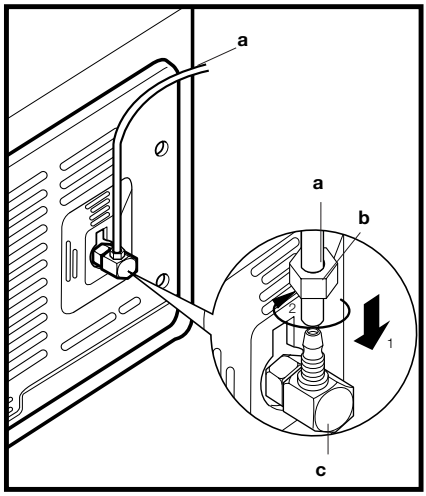

Connecting of the water hose to the cold water mains line

(in some models)

If you will use the refrigerator by connecting it to the cold water mains line, you must install a standard 1/2” valve connector to the cold water installation of your home. If this valve is not present or you are not sure, consult a qualified plumber.

1.Separate the union from the tap adaptor.

2.Install the tap adaptor to standard 1/2” valve connector.

3.After inserting the water hose to the union, install it to the tap adaptor and insert to the union to the tap adapter.

4.Tighten the union by hand.

WARNING: Secure the water hose to suitable points by means of the clips supplied to avoid any damage or displacement or accidental disconnection.

WARNING: After turning on the water valve, make sure that there is no leakage at both connection points of the water hose. If there is a leakage, turn off the valve immediately and tighten all joints again using a spanner or a pliers.

WARNING: Make sure that standard 1/2” valve connector is available and completely turned off on your cold water mains line.

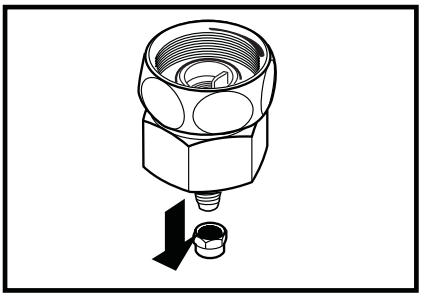

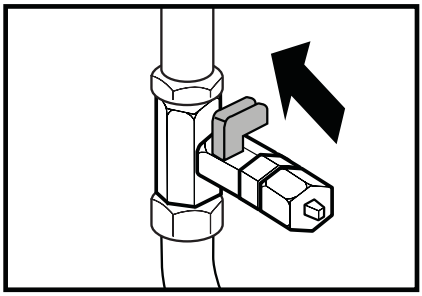

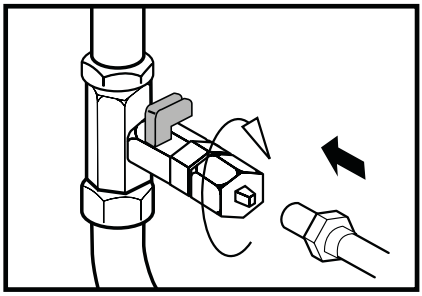

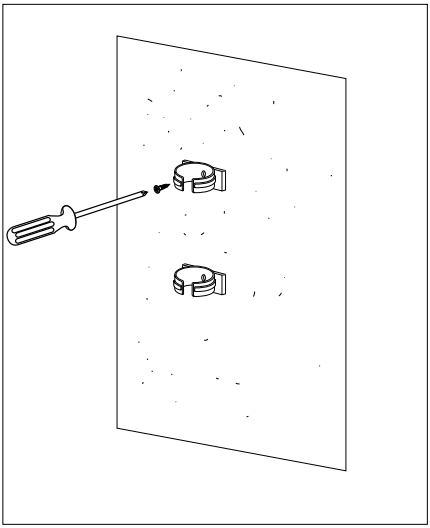

Water filter
(in some models)

Your refrigerator may be equipped with an external or internal filter depending on its model. To fit the water filter, follow the instructions below referring to the figures supplied:

Mounting the external filter onto the wall

1. First, determine the location to mount the external filter.
2. Then, determine the distance between the filter and the tap and filter and the water inlet respectively. Prepare hoses at required lengths.
3. Mount the filter connection kit onto the wall by using a screwdriver and attach the filter.

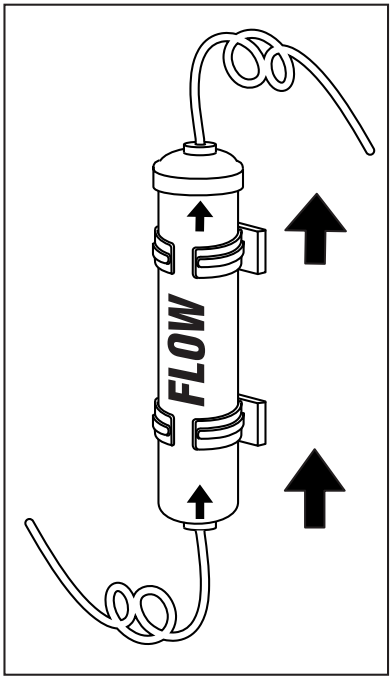

WARNING: Water filter must be hold upright as shown in the figure. It is critical to connect the water inlet and outlet hoses on the filter correctly.

After connecting the filter, do not consume the first 10 glasses of water.

WARNING: Never mount the filter onto the refrigerator. Coolant pipes might be pierced!

After connecting the filter, do not consume the first 10 glasses of water.

WARNING: Never mount the filter onto the refrigerator. Coolant pipes might be pierced!

4 Preparation

- Your refrigerator should be installed at least 300 mm away from heat sources such as hobs, ovens, central heater and stoves and at least 50 mm away from electrical ovens and should not be located under direct sunlight.
- The ambient temperature of the room where you install your refrigerator should at least be 10°C. Operating your refrigerator under cooler conditions is not recommended with regard to its efficiency.
- Please make sure that the interior of your refrigerator is cleaned thoroughly.
- If two refrigerators are to be installed side by side, there should be at least 20 mm distance between them.
- When you operate your refrigerator for the first time, please observe the following instructions during the initial six hours.
  - The door should not be opened frequently.
  - It must be operated empty without any food in it.
  - Do not unplug your refrigerator. If a power failure occurs out of your control, please see the warnings in the “Recommended solutions for the problems” section.
- Original packaging and foam materials should be kept for future transportations or moving.

5 Using your refrigerator

Indicator Panel

Indicator panels may vary depending on your product's model.

Indicator panel aids in using your refrigerator with its audio and visual functions.

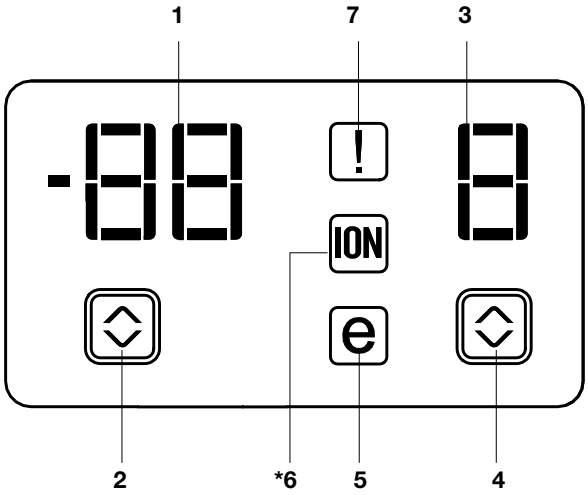

1. Freezer Compartment Temperature Indicator
2. Error Status Indicator
3. Fridge Compartment Temperature Indicator
4. Fridge Compartment Temperature Setting Button
5. Economy Mode Indicator
6. Ioniser Indicator
7. Freezer Compartment Temperature Setting Button

Figures that take place in this instruction manual are schematic and may not correspond exactly with your product. If the subject parts are not included in the product you have purchased, then it is valid for other models.

1. Freezer Compartment Temperature Indicator
It indicates the temperature set for Freezer compartment.

2. Freezer Compartment Temperature Setting Button
Press this button to set the temperature of the freezer compartment to -15, -18, -21, -24, -15... respectively. Press this button to set the desired temperature for the freezer compartment.

3. Fridge Compartment Temperature Indicator
Indicates the temperature set for Fridge compartment.

4. Fridge Compartment Temperature Setting Button
Press this button to set the temperature of the fridge compartment to 8, 6, 4, 2, 8... respectively. Press this button to set the desired temperature for the fridge compartment.

5. Economy Mode Indicator
Indicates that the refrigerator is running in energy-efficient mode.

6. Ioniser Indicator
Indicator light lights up continuously. This light indicates that your refrigerator is protected against the bacteria.

7. Error Status Indicator
If your refrigerator does not cool adequately or if there is a sensor failure, this indicator will be activated. When this indicator is active, Freezer Compartment Temperature indicator will display “e” and Fridge Compartment Temperature Indicator will display numbers such as “1,2,3…”. These numbers on the indicator provides information about the error to the service personnel.

Indicator panel

Indicator panels may vary according to the product model.
Audio – visual functions on the indicator panel helps you in using your product.

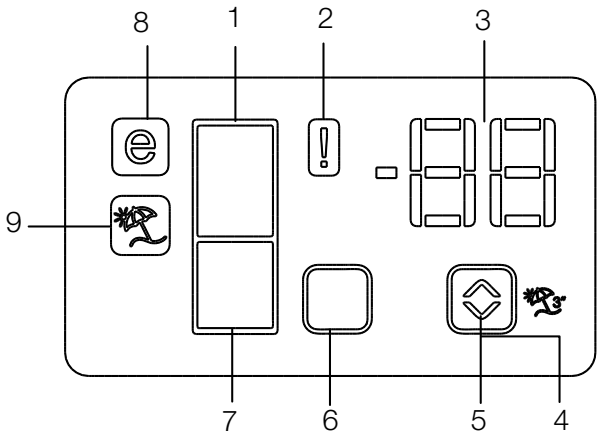

1. Fridge Compartment Indicator
2. Error status indicator
3. Temperature indicator
4. Vacation function button
5. Temperature setting button
6. Compartment selection button
7. Freezer compartment indicator
8. Economy mode indicator
9. Vacation function indicator
***optional**

Figures that take place in this instruction manual are schematic and may not correspond exactly with your product. If the subject parts are not included in the product you have purchased, then it is valid for other models.

1. Fridge compartment indicator
Fridge compartment light is illuminated while the fridge compartment temperature is set.

2. Error status indicator
If your refrigerator does not perform enough cooling or in case of a sensor fault, this indicator is activated. When this indicator is activated, “E” is displayed on the freezer compartment temperature indicator, and numbers such as “1,2,3...” are displayed on the fridge compartment temperature indicator. These numbers on the indicator inform service personnel about the error.

3. Temperature indicator
Indicates freezer, fridge compartment temperature.

4. Vacation function button
Press on Vacation Button for 3 seconds to activate this function. When the vacation function is activated, “- -” is displayed on the fridge compartment temperature indicator and no active cooling is performed on the fridge compartment. It is not suitable to keep the food in the fridge compartment when this function is activated. Other compartments shall be continued to be cooled as per their set temperature.

To cancel this function press **Vacation** button again.

5. Temperature setting button
Changes the temperature of the relevant compartment between -24°C... -15°C and 8°C...1°C.

6. Compartment selection button
Selection button: Press compartment selection button to switch between fridge and freezer compartments.

7. Freezer compartment indicator
Fridge compartment light is illuminated while the freezer compartment temperature is set.

8. Economy mode indicator
Indicates that the refrigerator operates in energy saving mode. This display shall be activated if the freezer compartment temperature is set to -15°C.

9. Vacation function indicator
Indicates that vacation is activated.

In some models

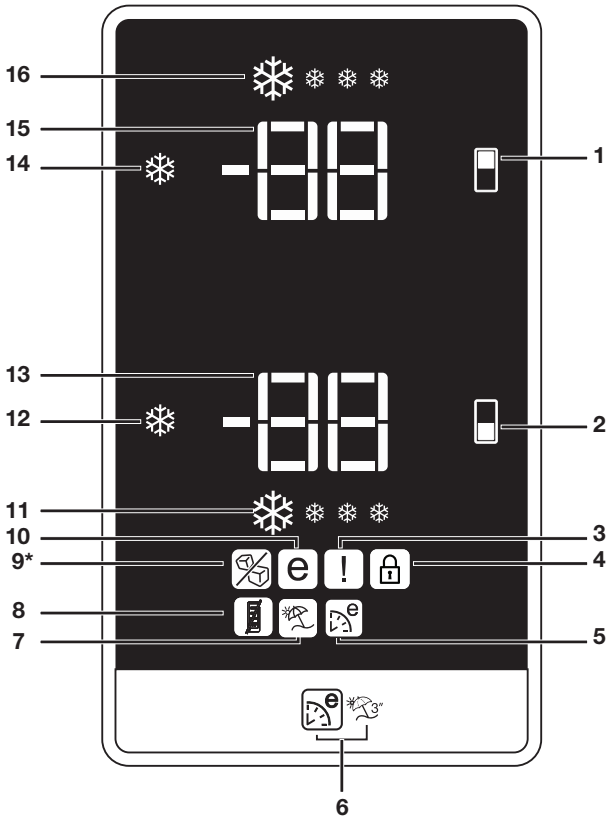

1. Freezer compartment setting / Icematic on-off button
2. Fridge compartment setting button
3. Error status indicator
4. Key lock indicator
5. Eco Extra Function indicator
6. Eco Extra/Vacation Button
7. Vacation function indicator
8. Energy saving function (display off)
9. Icematic off indicator (*in some models)
10. Economic usage indicator
11. Quick fridge function indicator
12. Quick fridge function button
13. Fridge compartment temperature setting indicator
14. Quick freeze function button
15. Freezer compartment temperature setting indicator
16. Quick freeze function indicator

Figures that take place in this instruction manual are schematic and may not correspond exactly with your product. If the subject parts are not included in the product you have purchased, then it is valid for other models.

1. Freezer Compartment Setting / Icematic On-Off Button

This function allows you to make the freezer compartment temperature setting. Press this button to set the temperature of the freezer compartment to -15, -18, -21 and -24 respectively.

To stop ice formation, press Icematic on-off button for 3 seconds. Water flow from water tank will stop when this function is selected. However, ice made previously can be taken from the Icematic. To restart ice formation, press Icematic on-off button for 3 seconds.

2. Fridge Compartment Setting Button

This function allows you to make the fridge compartment temperature setting. Press this button to set the temperature of the fridge compartment to 8, 6, 4, 2 respectively.

3. Error Status Indicator

If your refrigerator does not cool adequately or if there is a sensor failure, this indicator will be activated. When this indicator is active, Freezer Compartment Temperature indicator will display “E” and Fridge Compartment Temperature Indicator will display numbers such as “1,2,3…”. These numbers on the indicator provides information about the error to the service personnel.

When you place hot food into the freezer compartment or if you leave the door open for a long time, exclamation mark can illuminate for some time. This is not a failure; this warning will disappear when the food cools down.

4. Key Lock Indicator

Use this function if you do not want your refrigerator temperature setting changed. Press Fridge compartment setting button and Freezer compartment setting button simultaneously for a long time (3 sec) to activate this function.

5. Eco Extra Function Indicator

It indicates that the Eco-Extra function is active.

If this function is active, your refrigerator will automatically detect the least usage periods and energy-efficient cooling will be performed during those times. Economy indicator will be active while energy-efficient cooling is performed.

Press the relevant button again to deactivate this function.

6. Eco Extra/Vacation Button

Press this button briefly to activate the Eco Extra function. Press and hold this button for 3 sec. to activate the Vacation function. Press this button again to deactivate the selected function.

7. Vacation Function Indicator

Indicates that the vacation function is active. If this function is active, “- -” appears on the indicator of the fridge compartment and no cooling is performed in the fridge compartment. Other compartments will be cooled in accordance with the temperature set for them.

Press the relevant button again to deactivate this function.

8. Energy saving function (display off)

If the product doors are kept closed for a long time energy saving function is automatically activated and energy

saving symbol is illuminated.When energy saving function is activated, all symbols on the display other than energy saving symbol will turn off. When the Energy Saving function is activated, if any button is pressed or the door is opened, energy saving function will be canceled and the symbols on display will return to normal.

Energy saving function is activated during delivery from factory and cannot be canceled.

9. Ice Off indicator

Icematic will not run when the indicator of this function is active. See Item 1 to enable the Icematic.

10. Economy Mode Indicator

Indicates that the refrigerator is running in energy-efficient mode. Freezer Compartment temperature

This indicator will be active if the function is set to -15 or the energy efficient cooling is being performed due to Eco-Extra function.

11. Quick Fridge Indicator

This icon flashes in an animated style when the Quick Fridge function is active.

12. Quick Fridge Function

When you press the Quick Fridge button, the temperature of the compartment will be colder than the adjusted values.

This function can be used for food placed in the fridge compartment and required to be cooled down rapidly.

If you want to cool large amounts of fresh food, it is recommended to active this feature before putting the food into the fridge.

Quick Fridge indicator turns on when the Quick Fridge function is on. To cancel this function press Quick Fridge button again.

If you do not cancel it, Quick Fridge will cancel itself automatically after 4 hours or when the fridge compartment reaches to the required temperature.

This function is not recalled when power restores after a power failure.

13. Fridge Compartment Temperature Setting Indicator

Indicates the temperature set for the Fridge Compartment.

14. Freezer Compartment Temperature Setting Indicator

Indicates the temperature set for the Freezer Compartment.

15. Quick Freeze Function

Quick Freeze indicator turns on when the Quick Freeze function is active. To cancel this function press Quick Freeze button again. Quick Freeze indicator will turn off and return to its normal settings. If you do not cancel it, Quick Freeze will cancel itself automatically after 8 hours or when the freezer compartment reaches to the required temperature.

If you want to freeze large amounts of fresh food, press the Quick Freeze button before putting the food into the freezer compartment.

If you press the Quick Freeze button repeatedly with short intervals, the electronic circuit protection will be activated and the compressor will not start up immediately.

This function is not recalled when power restores after a power failure.

16. Quick Freeze Indicator

This icon flashes in an animated style when the Quick Freeze function is active.

Door Open Warning

(This feature may vary depending on the door of the product and may not exist in some models.)

An audio warning signal will be given when the door of your product is left open for at least 1 minute. This warning will be muted when the door is closed or any of the display buttons (if any) are pressed.

Dual cooling system:

Your refrigerator is equipped with two separate cooling systems to cool the fresh food compartment and freezer compartment. Thus, air in the fresh food compartment and freezer compartment do not get mixed. Thanks to these two separate cooling systems, cooling speed is much higher than other refrigerators. Odors in the compartments do not get mixed. Also additional power saving is provided since the defrosting is performed individually.

Freezing fresh food

• Wrap or cover the food before placing them in .

• Hot food must cool down to the room temperature before putting them in the refrigerator.

• The foodstuff that you want to freeze must be fresh and in good quality.

• Foodstuff must be divided into portions according to the family's daily or meal based consumption needs.

• Foodstuff must be packaged in an airtight manner to prevent them from drying even if they are going to be kept for a short time.

• Materials to be used for packagings must be resistant to cold and humidity and they must be airtight. The packaging material of the food must be at a sufficient thickness and durability. Otherwise the food hardened due to freezing may puncture the packaging. It is important for the packaging to be closed securely for safe storage of the food.

• Frozen food must be used immediately after they are thawed and they should never be re-frozen.

• Please observe the following instructions to obtain the best results.

1. If the fridge has a quick freeze function, activate the quick freeze function when you want to freeze the food.

2. Do not freeze too large quantities of food at one time. The quality of the food is best preserved when it is frozen right through to the core as quickly as possible.

3. Take special care not to mix already frozen food and fresh food.

4. Make sure raw foods are not in contact with cooked foods in the fridge**.**

Freezer Compartment Setting	Fridge Compartment Setting	Remarks
-18°C	4°C	This is the normal recommended setting.
-20, -22 or -24°C	4°C	These settings are recommended when the ambient temperature exceeds 30°C.
Quick Freeze	4°C	Use when you wish to freeze your food in a short time. If is recommended to be used to maintain the quality of meat and fish products.
-18°C or colder	2°C	If you think that your fridge compartment is not cold enough because of the hot conditions or frequent opening and closing of the door.
-18°C or colder	Quick Fridge	You can use it when your fridge compartment is overloaded or if you wish to cool down your food rapidly. It is recommended that you activate the quick freeze function 4-8 hours before placing the food.

Recommendations for preservation of frozen food

• Pre-packed commercially frozen food should be stored in accordance with the frozen food manufacturer's instructions in a frozen food storage compartment.

• To ensure that the high quality supplied by the frozen food manufacturer and the food retailer is maintained, following points should be noted:

1.Put packages in the freezer as quickly as possible after purchase.

2.Ensure that contents of the package are labeled and dated.

3. Do not exceed "Use By", "Best Before" dates on the packaging.

Defrosting

The freezer compartment defrosts automatically.

Placing the food

Freezer compartment shelves	Various frozen food such as meat, fish, ice cream, vegetables and etc.
Egg section	Egg
Fridge compartment shelves	Food in pans, covered plates and closed containers
Door shelves of fridge compartment	Small and packaged food and drinks (such as milk, fruit juice and beer)
Crisper	Vegetables and fruits
Freshzone compartment	Delicatessen products (cheese, butter, salami and etc.)

Deep-freeze information

Food must be frozen as rapidly as possible when they are put in the freezer in order to keep them in good quality.

It is possible to preserve the food for a long time only at -18°C or lower temperatures.

You can keep the freshness of food for many months (at -18°C or lower temperatures in the deep freeze).

WARNING! ⚠

• Foodstuff must be divided into portions according to the family's daily or meal based consumption needs.

• Foodstuff must be packaged in an airtight manner to prevent them from drying even if they are going to be kept for a short time.

Materials necessary for packaging:

• Cold resistant adhesive tape

• Self-adhesive label

• Rubber rings

• Pen

Materials to be used for packaging the foodstuff must be tear-proof and resistant to cold, humidity, dour, oils and acids.

Foodstuff to be frozen should not be allowed to come in contact with the previously frozen items to prevent their partial thawing. Thawed out food must be consumed and must not be frozen again.

Water dispenser
(OPTIONAL)

Water dispenser is a very useful feature to obtain chilled water without opening the door of your fridge. Since you do not have to open the door of your fridge frequently, you also save on electricitiy.

Using the water dispenser

Push in the lever of the water dispenser with your glass. By releasing the lever, you cut off the dispensing.

When operating the water dispenser, maximum flow is achieved by fully depressing the lever. Please note, how much water flows from the dispenser depends on how far you depress the lever. As the level of water in your cup / glass rises, gently reduce the amount of pressure on the lever to avoid overflow. If you depress the lever a small amount, then water will trickle; this is perfectly normal and is not a fault.

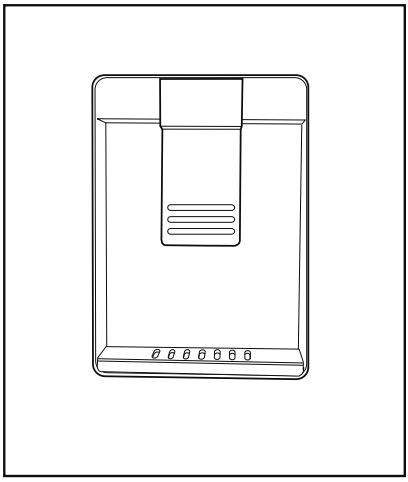

Filling in the water tank of water dispenser

Open the cap of the water tank as illustrated in the figure. Fill in with pure and clean drinking water. Close the cap.

Caution!

- Do not fill water tank with any liquid other than drinking water; beverages such as fruit juice, carbonated fizzy soda drinks, alcoholic drinks are not suitable for use with water dispenser. If such liquids are used, the water dispenser will malfunction and may be damaged beyond repair. The guarantee does not cover such uses. Some chemical ingredients and additives in such drinks / beverages may also attack and damage water tank material.
- Only use clean pure drinking water.
- Capacity of water dispenser tank is 3 litres [6.4 pints], do not overfill.
- Push the water dispenser lever with a rigid cup. If you are using a plastic disposable cup, then push the lever with your fingers from behind the cup.

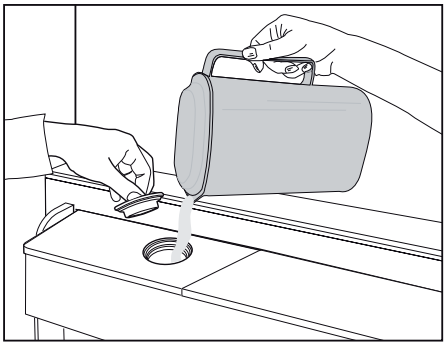

Cleaning the water tank

Remove the water tank,and detach the top cover mechanism from the water tank. Clean the water tank with warm clean water, reinstall the top cover.

When installing the water tank, make sure that hooks it fits securely into the hangers on the door. Make sure that parts removed during cleaning (if any) are installed correctly into their original locations. Otherwise, water may leak.

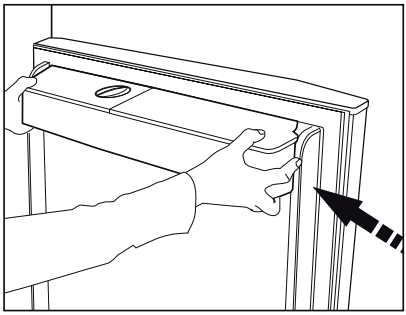

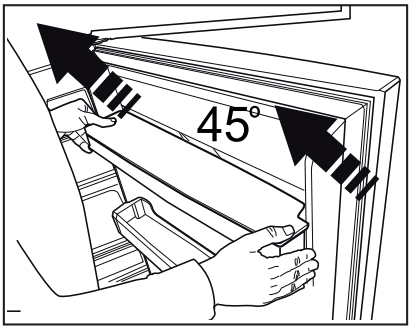

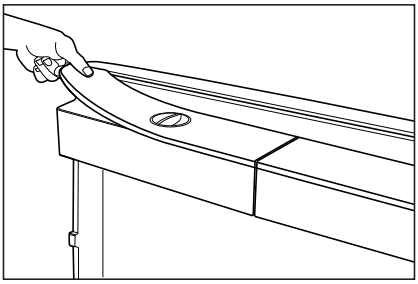

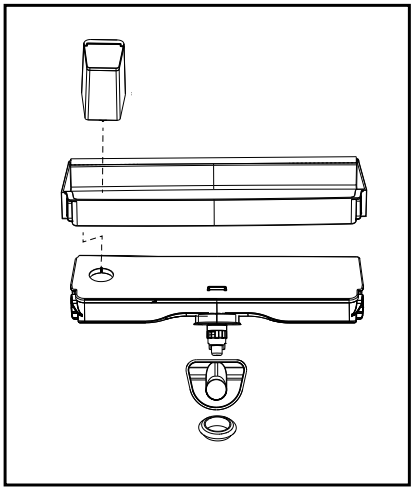

Important:
Water tank and components of water dispenser are not dishwasher-proof.

Water tray
(OPTIONAL)

Water that drips while using the water dispenser accumulates in the drip tray. Remove the drip tray by pulling it towards yourself and empty it from time to time.

Remove the plastic drainer part as shown in the diagram by pressing down on the edge.

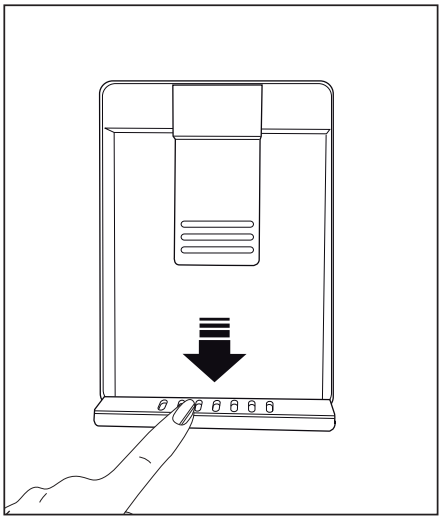

Egg section

You can place the egg section in any of the door shelves. If it is going to be placed in the body, the lower shelves are recommended due them being cooler.

Never store eggs in the freezer compartment.

Avoid direct contact between eggs and other foods.

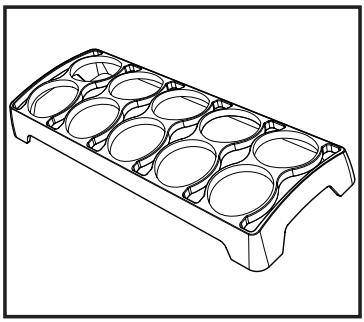

Blue light

(This feature is optional)

Beko Active Fresh Blue Light TM technology ensures that the process of photosynthesis continues in the refrigerator prolonging the storage life of fresh fruit and vegetables while maintaining their natural flavours and nutrition.

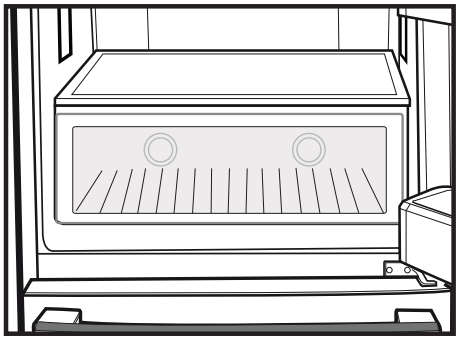

Rotary storage container

(in some models)

Sliding body shelf can be moved to left or right in order to allow you place the tall bottles, jars or boxes to the lower shelf (Fig. 1)

You can reach the food that you have placed into the shelf by grabbing and turning it from its right edge (Fig.2).

When you want to load or remove it to clean, turn it by 90 degrees, raise it up and pull towards yourself (Fig. 3-4).

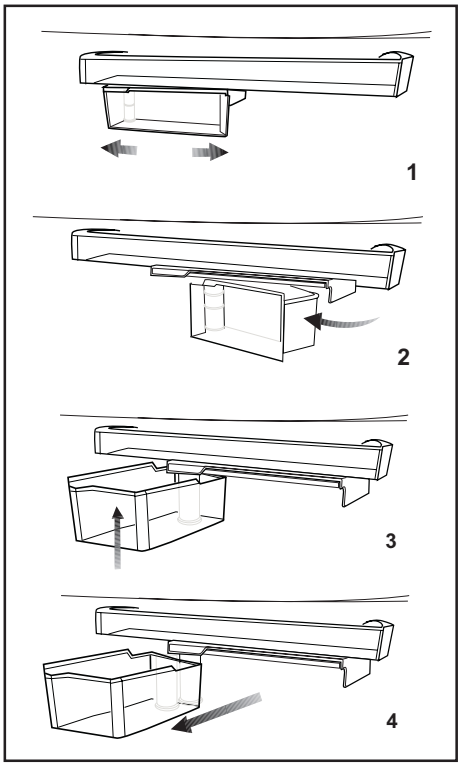

Movable Body shelf:

***optional**

Manually movable body shelf is an option enabling the usage of interior shelf volume of the refrigerator in a flexible way.

When you want to store an item which is taller than the distance between two shelves, slide the manually movable body shelf holding it from its grips as shown in the figure and this will enable you to move the shelf upwards. By sliding the grip to the right, you can move the manual body shelf only 45 mm upwards.

The manually movable body shelf can only be moved with max 10 kg load on it.

If more than 10 kg will be loaded, then it should be used as a fixed shelf like others. In this case, if it is required to adjust the shelf height, first empty the food stuff, adjust it as per your height requirement and then load it with the food stuff. The shelf is intended to carry max. 40 kg while used as a fixed shelf.

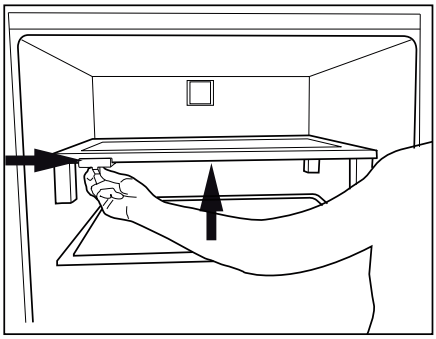

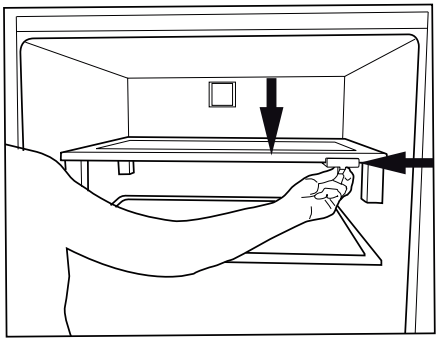

Icematic and ice storage container

***May not be available in all models**

Using the Icematic

Fill the Icematic with water and place it into its seat. Your ice will be ready approximately in two hours. Do not remove the Icematic from its seating to take ice.

Turn the knobs on the ice reservoirs clockwise by 90 degrees.

Ice cubes in the reservoirs will fall down into the ice storage container below.

You may take out the ice storage container and serve the ice cubes.

If you wish, you may keep the ice cubes in the ice storage container.

Ice storage container

Ice storage container is only intended for accumulating the ice cubes. Do not put water in it. Otherwise, it will break.

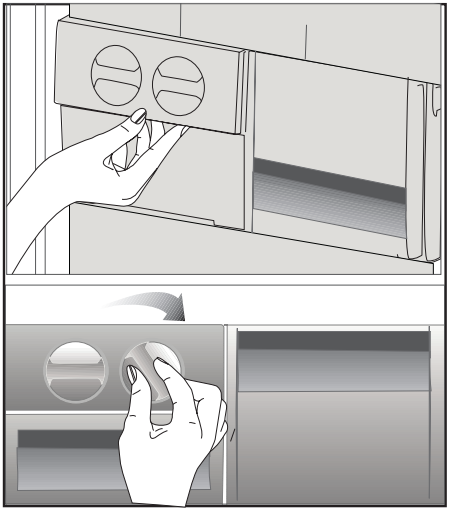

Ice Machine

(in some models)

Auto Ice machine system allows you to obtain ice from the refrigerator easily. After the water system pipe connection will be done, the ice can be taken from the ice drawer. First ice cubes will be ready in approximately 2 hours in the Ice machine drawer located in the freezer compartment. Do not put water in it to make ice as it may break. The ice container is not used for storing foods.

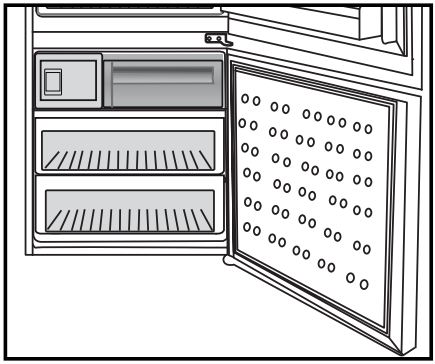

Description and cleaning of odor filter

***May not be available in all models**

Odor filter prevents unpleasant odor build-up in your refrigerator.

Pull the cover into which the odor filter is installed downwards from the front section and remove as illustrated. Leave the filter under sunlight for one day. Filter will be cleaned during this time. Install the filter back to its place.

Odor filter must be cleaned once in a year.

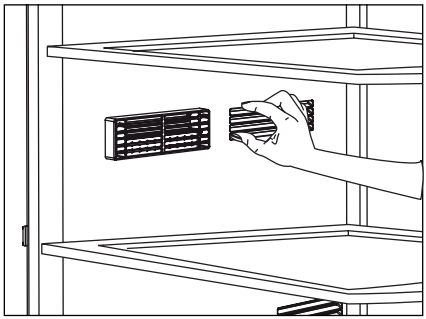

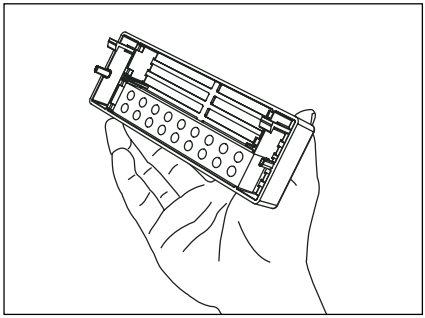

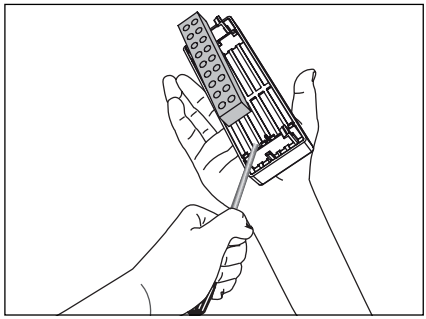

Humidity Controlled Crisper (FreSHelf)
***optional**

Humidity controlled crisper feature keeps the humidity of vegetables and fruits under control and allows keeping the food fresh for a much longer time.

We recommend you to place vegetables with leaves such as lettuce, spinach and vegetables vulnerable to humidity loss not vertical on their roots but horizontal in the crispers.

While placing the vegetables consider their weight and place the heavy and solid vegetable to the bottom, light and soft vegetables to the top.

Do not leave vegetables within plastic bags in the crispers. Leaving vegetables in plastic bags will make them spoil in a very short time. If it is required to separate vegetables for hygienic purposes, then use porous paper packing materials instead of plastic bags.

Do not place fruits, mainly apple and also pear, apricot, peach etc. which produce ethylene gas together with other vegetables-fruits in the same crisper. The ethylene produced by these fruits will cause other vegetables-fruits to mature rapidly and then cause them to spoil in a shorter time.

6 Maintenance and cleaning

⚠Never use gasoline, benzene or similar substances for cleaning purposes.

⚠We recommend that you unplug the appliance before cleaning.

⚠Never use any sharp abrasive instrument, soap, household cleaner, detergent and wax polish for cleaning.

ⓘUse lukewarm water to clean the cabinet of your refrigerator and wipe it dry.

ⓘUse a damp cloth wrung out in a solution of one teaspoon of bicarbonate of soda to one pint of water to clean the interior and wipe it dry.

⚠Make sure that no water enters the lamp housing and other electrical items.

⚠If your refrigerator is not going to be used for a long period of time, unplug the power cable, remove all food, clean it and leave the door ajar.

ⓘCheck door seals regularly to ensure they are clean and free from food particles.

⚠To remove door racks, remove all the contents and then simply push the door rack upwards from the base.

⚠Never use cleaning agents or water that contain chlorine to clean the outer surfaces and chromium coated parts of the product. Chlorine causes corrosion on such metal surfaces.

⚠Do not use sharp, abrasive tools, soap, household cleaning agents, detergents, kerosene, fuel oil, varnish etc. to prevent removal and deformation of the prints on the plastic part. Use lukewarm water and a soft cloth for cleaning and then wipe it dry.

Protection of plastic surfaces

ⓘ Do not put the liquid oils or oil-cooked meals in your refrigerator in unsealed containers as they damage the plastic surfaces of your refrigerator. In case of spilling or smearing oil on the plastic surfaces, clean and rinse the relevant part of the surface at once with warm water.

7 Troubleshooting

Please review this list before calling the service. It will save your time and money. This list includes frequent complaints that are not arising from defective workmanship or material usage. Some of the features described here may not exist in your product.

The refrigerator does not operate.
• The plug is not inserted into the socket correctly. >>>Insert the plug into the socket securely. • The fuse of the socket which your refrigerator is connected to or the main fuse have blown out. >>>Check the fuse.
Condensation on the side wall of the fridge compartment (MULTIZONE, COOL CONTROL and FLEXI ZONE).
• Door has been opened frequently. >>>Do not open and close the door of refrigerator frequently. • Ambient is very humid. >>>Do not install your refrigerator into highly humid places. • Food containing liquid is stored in open containers. >>>Do not store food with liquid content in open containers. • Door of the refrigerator is left ajar. >>>Close the door of the refrigerator. • Thermostat is set to a very cold level. >>>Set the thermostat to a suitable level.
• Compressor is not running
• Protective thermic of the compressor will blow out during sudden power failures or plug-out plug-ins as the refrigerant pressure in the cooling system of the refrigerator has not been balanced yet. The refrigerator will start running approximately after 6 minutes. Please call the service if the refrigerator does not startup at the end of this period. • The fridge is in defrost cycle. >>>This is normal for a full-automatically defrosting refrigerator. Defrosting cycle occurs periodically. • The refrigerator is not plugged into the socket. >>>Make sure that the plug is fit into the socket. • Temperature settings are not made correctly. >>>Select the suitable temperature value. • There is a power outage. >>>Refrigerator returns to normal operation when the power restores.
The operation noise increases when the refrigerator is running.
• The operating performance of the refrigerator may change due to the changes in the ambient temperature. It is normal and not a fault.
The refrigerator is running frequently or for a long time.

- New product may be wider than the previous one. Larger refrigerators operate for a longer period of time.
- The room temperature may be high. >>>It is normal that the product operates for longer periods in hot ambient.
- The refrigerator might be plugged in recently or might be loaded with food. >>>When the refrigerator is plugged in or loaded with food recently, it will take longer for it to attain the set temperature. This is normal.
- Large amounts of hot food might be put in the refrigerator recently. >>>Do not put hot food into the refrigerator.
- Doors might be opened frequently or left ajar for a long time. >>>The warm air that has entered into the refrigerator causes the refrigerator to run for longer periods. Do not open the doors frequently.
- Freezer or fridge compartment door might be left ajar. >>>Check if the doors are closed completely.
- The refrigerator is adjusted to a very low temperature. >>>Adjust the refrigerator temperature to a warmer degree and wait until the temperature is achieved.
- Door seal of the fridge or freezer may be soiled, worn out, broken or not properly seated. >>>Clean or replace the seal. Damaged/broken seal causes the refrigerator to run for a longer period of time in order to maintain the current temperature.

Freezer temperature is very low while the fridge temperature is sufficient.

- The freezer temperature is adjusted to a very low value. >>>Adjust the freezer temperature to a warmer degree and check.

Fridge temperature is very low while the freezer temperature is sufficient.

- The fridge temperature is adjusted to a very low value. >>>Adjust the fridge temperature to a warmer degree and check.

Food kept in the fridge compartment drawers is frozen.

- The fridge temperature is adjusted to a very high value. >>>Adjust the fridge temperature to a lower value and check.

Temperature in the fridge or freezer is very high.

- The fridge temperature is adjusted to a very high value. >>>Fridge compartment temperature setting has an effect on the temperature of the freezer. Change the temperatures of the fridge or freezer and wait until the relevant compartments attain a sufficient temperature.
- Doors are opened frequently or left ajar for a long time. >>>Do not open the doors frequently.
- Door is ajar. >>>Close the door completely.
- The refrigerator is plugged in or loaded with food recently. >>>This is normal. When the refrigerator is plugged in or loaded with food recently, it will take longer for it to attain the set temperature.
- Large amounts of hot food might be put in the refrigerator recently. >>>Do not put hot food into the refrigerator.

• Vibrations or noise.
• The floor is not level or stable. >>> If the refrigerator rocks when moved slowly, balance it by adjusting its feet. Also make sure that the floor is strong enough to carry the refrigerator, and level. • The items put onto the refrigerator may cause noise. >>>Remove the items on top of the refrigerator.
There are noises coming from the refrigerator like liquid flowing, spraying, etc.
• Liquid and gas flows occur in accordance with the operating principles of your refrigerator. It is normal and not a fault.
Whistle comes from the refrigerator.
• Fans are used in order to cool the refrigerator. It is normal and not a fault.
Condensation on the inner walls of refrigerator.
• Hot and humid weather increases icing and condensation. It is normal and not a fault. • Doors are opened frequently or left ajar for a long time. >>>Do not open the doors frequently. Close them if they are open. • Door is ajar. >>>Close the door completely.
Humidity occurs on the outside of the refrigerator or between the doors.
• There might be humidity in the air; this is quite normal in humid weather. When the humidity is less, condensation will disappear.
Bad odour inside the refrigerator.
• No regular cleaning is performed. >>>Clean the inside of the refrigerator regularly with a sponge, lukewarm water or carbonate dissolved in water. • Some containers or package materials may cause the smell. >>>Use a different container or different brand packaging material. • Food is put into the refrigerator in uncovered containers. >>>Keep the food in closed containers. Microorganisms spreading out from uncovered containers can cause unpleasant odours. • Remove the foods that have expired best before dates and spoiled from the refrigerator.
The door is not closing.
• Food packages are preventing the door from closing. >>>Replace the packages that are obstructing the door. • The refrigerator is not completely even on the floor. >>>Adjust the feet to balance the refrigerator. • The floor is not level or strong. >>>Make sure that the floor is level and capable to carry the refrigerator.
Crispers are stuck.
• The food is touching the ceiling of the drawer. >>>Rearrange food in the drawer.
If The Surface Of The Product Is Hot.

8 Beko Customer Care

Before you call Beko for service or assistance...
Refer to your User Guide and check the following:

1. Your Appl iance is correctly installed.
2. Your Appliance is connected to power.
3. You are familiar with its normal mode of operation
4. You have read the 'Recommended solutions for the problems'

If after checking the points above, the problem still exists, please call our Beko Customer Care hotline as listed below:-

If calling from Australia....
Beko Customer Care and talk to one of our consultants.
Toll Free Toll Free 1300AUBEKO 1300 282 356
Email: Beko.care@Beko.com * **Fax:** (07) 55493546

If calling from New Zealand....
Beko Customer Care and talk to one of our consultants.
Toll Free 0800NZBEKO 0800 69 2356
Email: Beko.care@Beko.com * **Fax:** (+617) 55493546

*** If you contact us by Email please provide the following details:**

Your name and Address
Date of Purchase
Model Number
Serial Number
Complete description of the problem or request



57 1824 0000/AV
EN

CE

www.beko.com.au