USER GUIDE & SERVICE MANUAL



Model: U-ADA24RB-13A

USER GUIDE & SERVICE MANUAL

Click on any section below to jump directly there

Table of Contents

Intro

Safety

- Safety and Warning
- Disposal And Recycling

Installation

- Environmental Requirements
- Electrical
- Cutout Dimensions
- Product Dimensions
- Side by Side Installation
- Anti-Tip Bracket
- General Installation
- Grille / Plinth Installation
- Door Swing
- Door Stop
- Door Adjust

Maintenance

- Cleaning
- Cleaning Condenser
- Extended Non-Use

Operating Instructions

- First Use
- Control Operation
- Sabbath Mode
- Airflow and Product Loading

Service

- Interior Shelves
- Troubleshooting
- Wire Diagram
- Product Liability
- Warranty Claims
- Parts
- R600a Specifications
- System Diagnosis Guide
- Compressor Specifications
- Troubleshooting Extended
- Control Operation - Service
- Thermistor
- Defrost
- Remove Fan and Cover
- Warranty

WELCOME TO U-LINE

Congratulations on your U-Line purchase. Your product comes from a company with over five decades of premium modular ice making, refrigeration, and wine preservation experience. U-Line creates products focused on functionality, style, and inspired innovations — paying close attention to even the smallest details. Applications include residential, outdoor, ADA height compliant, marine, and commercial. Complete product categories include Beverage Centers, Wine Refrigerators, Ice Machines, Refrigerators, Freezers, and Dispensers.

Our advanced refrigeration systems, large and flexible capacities, and Built-In to Stand Out® clean integrated look allow you to preserve the right product, in the right place, at the right temperature. Since 2014, U-Line has been part of the Middleby family of brands. All products are designed, engineered, and assembled in Milwaukee, Wisconsin, USA, and select products are available worldwide. U-Line - RIGHT PRODUCT. RIGHT PLACE. RIGHT TEMPERATURE®.

PRODUCT INFORMATION

Looking for additional information on your product? User Guides, Spec Sheets, CAD Drawings, Compliance Documentation, and Product Warranty information are all available for reference and download at u-line.com.

PROPERTY DAMAGE / INJURY CONCERNS

In the unlikely event property damage or personal injury is suspected related to a U-Line product, please take the following steps:

1. U-Line Customer Care must be contacted immediately at +1.414.354.0300.
2. Service or repairs performed on the unit without prior written approval from U-Line is not permitted. If the unit has been altered or repaired in the field without prior written approval from U-Line, claims will not be eligible.

GENERAL INQUIRIES

U-Line Corporation
8900 N. 55th Street
Milwaukee, Wisconsin 53223 USA
Monday - Friday 8:00 am to 4:30 pm CST
T: +1.414.354.0300
Email: sales@u-line.com
u-line.com

SERVICE & PARTS ASSISTANCE

Monday - Friday 8:00 am to 4:30 pm CST
T: +1.800.779.2547
Service Email: onlineservice@u-line.com
Parts Email: onlineparts@u-line.com

CONNECT WITH US

blog

Designed, engineered and assembled in WI, USA

Safety and Warning

NOTICE

Please read all instructions before installing, operating, or servicing the appliance.

Use this appliance for its intended purpose only and follow these general precautions with those listed throughout this guide:

SAFETY ALERT DEFINITIONS

Throughout this guide are safety items labeled with a Danger, Warning or Caution based on the risk type:

⚠ DANGER

Danger means that failure to follow this safety statement will result in severe personal injury or death.

⚠ WARNING

Warning means that failure to follow this safety statement could result in serious personal injury or death.

⚠ CAUTION

Caution means that failure to follow this safety statement may result in minor or moderate personal injury, property or equipment damage.

Disposal and Recycling

⚠ DANGER

RISK OF CHILD ENTRAPMENT. Before you throw away your old refrigerator or freezer, take off the doors and leave shelves in place so children may not easily climb inside.

If the unit is being removed from service for disposal, check and obey all federal, state and local regulations regarding the disposal and recycling of refrigeration appliances, and follow these steps completely:

1. Remove all consumable contents from the unit.

2. Unplug the electrical cord from its socket.

3. Remove the door(s)/drawer(s).

Environmental Requirements

This model is intended for indoor/interior applications only and is not to be used in installations that are open/ exposed to natural elements.

This unit is designed to operate between 50°F (10°C) and 100°F (38°C). Higher ambient temperatures may reduce the unit's ability to reach low temperatures and/or reduce ice production on applicable models.

For best performance, keep the unit out of direct sunlight and away from heat generating equipment.

In climates where high humidity and dew points are present, condensation may appear on outside surfaces. This is considered normal. The condensation will evaporate when the humidity drops.

⚠ CAUTION

Damages caused by ambient temperatures of 40°F (4°C) or below are not covered by the warranty.

Electrical

⚠ WARNING

SHOCK HAZARD — Electrical Grounding Required. Never attempt to repair or perform maintenance on the unit until the electricity has been disconnected.

Never remove the round grounding prong from the plug and never use a two-prong grounding adapter.

Altering, cutting or removing power cord, removing power plug, or direct wiring can cause serious injury, fire, loss of property and/or life, and will void the warranty.

Never use an extension cord to connect power to the unit.

Always keep your working area dry.

NOTICE

Electrical installation must observe all state and local codes. This unit requires connection to a grounded (three-prong), polarized receptacle that has been placed by a qualified electrician.

The unit requires a grounded and polarized 115 VAC, 60 Hz, 15A power supply (normal household current). An individual, properly grounded branch circuit or circuit breaker is recommended. A GFCI (ground fault circuit interrupter) is usually not required for fixed location appliances and is not recommended for your unit because it could be prone to nuisance tripping. However, be sure to consult your local codes.

See CUTOUT DIMENSIONS for recommended receptacle location.

Cutout Dimensions

PREPARE SITE

Your U-Line product has been designed for either free-standing or built-in installation. When built-in, your unit does not require additional air space for top, sides, or rear. However, the front grille must NOT be obstructed, and clearance is required for an electrical connection in the rear.

⚠ CAUTION

Unit can NOT be installed behind a closed cabinet door.

CUTOUT DIMENSIONS

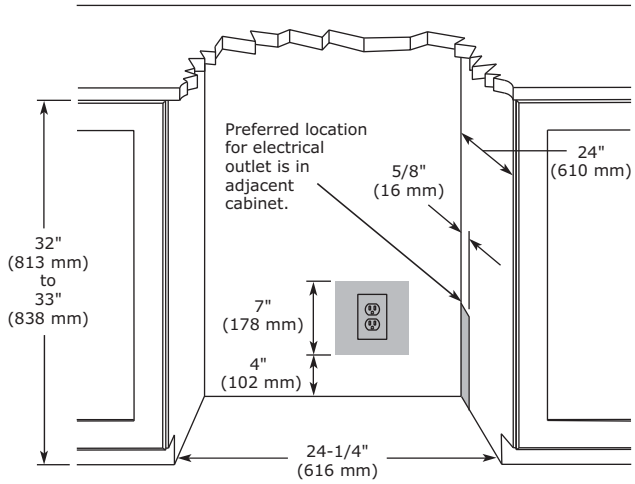

Product Dimensions

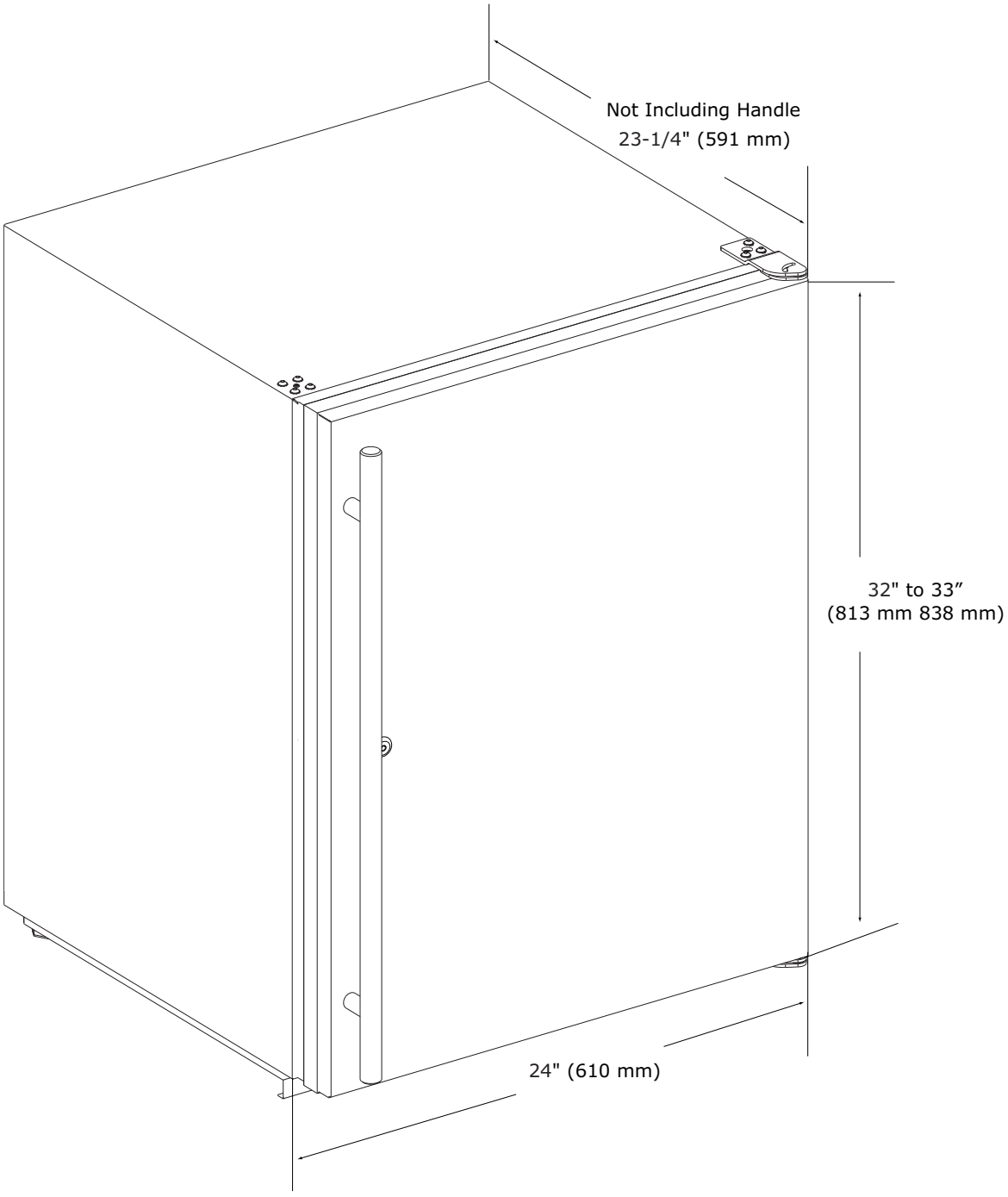

Side-by-Side Installation

Two units may be installed side-by-side.

Cutout width for a side-by-side installation is the cutout dimension of a single unit times two.

No trim kit is required. However, 1/4" (6 mm) of space needs to be maintained between the units to ensure unobstructed door swing.

Units must operate from separate, properly grounded electrical receptacles placed according to each unit's electrical specifications requirements.

Side-by-Side Installation with Bracket

1. Slide both units out so screws on top of units are easily accessible.

2. Remove screws as shown below.

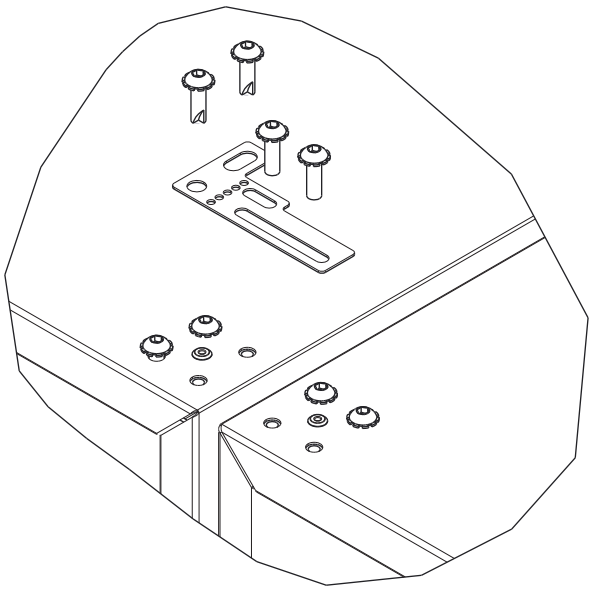

3. Place bracket over holes and attach to unit with two screws removed in step 2 using a T-25 Torx driver. Tighten screws fully.

4. Gently push units into position. Be careful not to entangle the electrical cord or water line, if applicable.

5. Re-check the leveling, from front to back and side to side. Make any necessary adjustments. The unit's top surface should be approximately 1/8" (3 mm) below the countertop.

Anti-Tip Bracket

1. Slide unit out so screws on top of unit are easily accessible.

2. Remove the two screws from the opposite side of the hinge assembly using a T-25 Torx driver (see below).

NOTE: 1224 models shown with four screw. 1215 models only have three screws, but same screws are used in both applications.

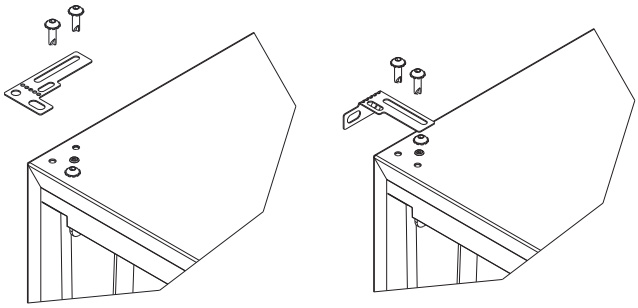

3. Place bracket (part #14154) over holes and attach to unit with two screws removed in step 2 using a T-25 Torx driver. Tighten screws fully.

4. Gently push unit into position. Be careful not to entangle the electrical cord or water line, if applicable.

5. Check to be sure the unit is level from front to back and side to side. Make any necessary adjustments. The unit's top surface should be approximately 1/8" (3 mm) below the countertop.

6. Secure bracket into adjoining surface.

General Installation

LEVELING INFORMATION

1. Use a level to confirm the unit is level. Level should be placed along top edge and side edge as shown.

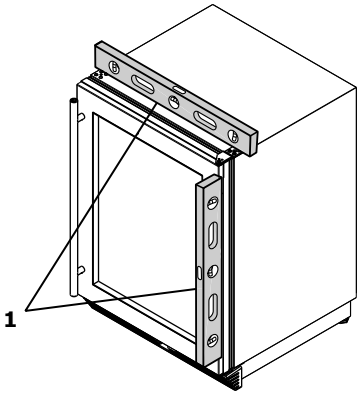

2. If the unit is not level, adjust the legs on the corners of the unit as necessary.

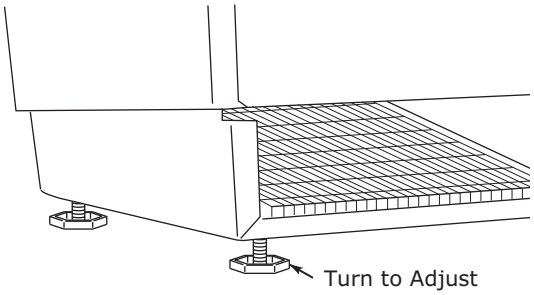

3. Confirm the unit is level after each adjustment and repeat the previous steps until the unit is level.

INSTALLATION TIP

If the room floor is higher than the floor in the cutout opening, adjust the rear legs to achieve a total unit rear height of 1/8" (3 mm) less than the opening's rear height. Shorten the unit height in the front by adjusting the front legs. This allows the unit to be gently tipped into the opening. Readjust the front legs to level the unit after it is correctly positioned in the opening.

INSTALLATION

1. Plug in the power/electrical cord.

2. Gently push the unit into position. Be careful not to entangle the cord.

3. Re-check the leveling, from front to back and side to side. Make any necessary adjustments. The unit's top surface should be approximately 1/8" (3 mm) below the countertop.

4. Remove the interior packing material and wipe out the inside of the unit with a clean, water-dampened cloth.

Grille - Plinth Installation

REMOVING AND INSTALLING GRILLE

⚠ WARNING

Disconnect electric power to the unit before removing the grille.

When using the unit, the grille (plinth strip/base fascia) must be installed.

⚠ WARNING

DO NOT touch the condenser fins. The condenser fins are SHARP and can be easily damaged.

Removing the grille

1. Disconnect power to the unit.

2. Loosen the two screws (1). Some models may have only one screw in the center.

3. Remove grille (2) and grille cap from unit.

Installing the grille

1. Align cabinet and grille holes and secure, but do not overtighten grille screws (1).

2. Reconnect power to the unit.

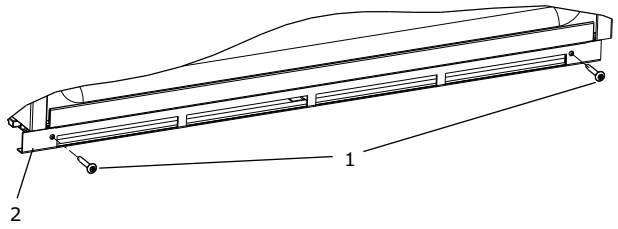

Door Swing

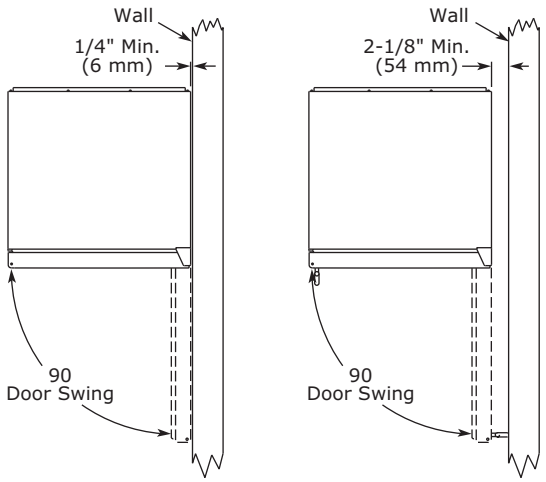

Units have a zero clearance for the door to open 90°, when installed adjacent to cabinets.

Stainless Steel and black and white models require 2-1/8" (54 mm) door clearance to accommodate the handle if installed next to a wall.

Integrated models require 1/4" (6 mm) clearance if installed next to a wall. Allow for additional space for any knobs or pulls installed on the integrated panel/frame.

Door Stop

Your U-Line unit was shipped to you with the optional 90° pin(s). (Models that are 15" wide include 1 pin. Models that are 24" wide include 2 pins.) The unit's door will open freely without a fixed opening angle limitation. If you would like the door stop at 90° follow these instructions.

NOTICE

The pin is designed to stop the door at 90° under normal operating conditions. It is not designed for excessive force. Do not use the door to move the unit in/out of the cutout during installation.

If your unit is already undercounter, it might need to be moved out/forward to access the hinge.

1. Locate the threaded pin.

2. With the door between 0° (closed) and 90° and using a 3/32" hex driver, install the threaded pin through the hinge.

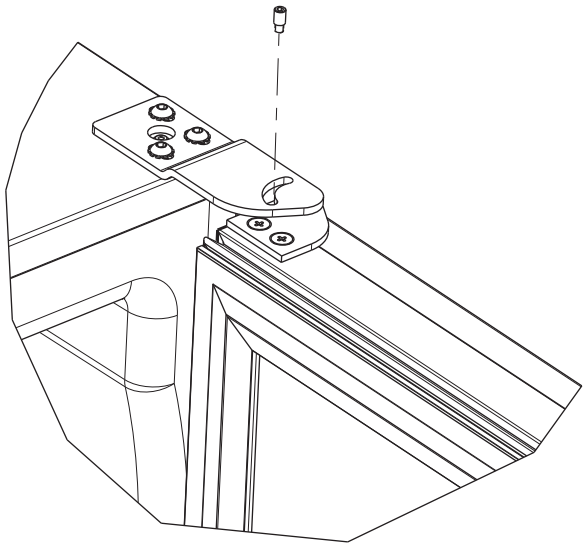

3. On 24" models, a second pin is included for the bottom hinge. Repeat steps above for second hinge.

NOTE: Threaded pin will be inserted from the bottom.

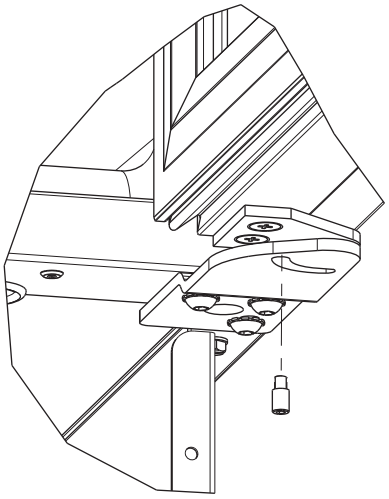

4. Carefully slide your unit back in place.

NOTICE

The pin can be removed to return the door swing back to its original state by unscrewing the threaded pin.

Door Adjustments

DOOR ALIGNMENT AND ADJUSTMENT

Align and adjust the door if it is not level or is not sealing properly. If the door is not sealed, the unit may not cool properly, or excessive frost may form in the interior.

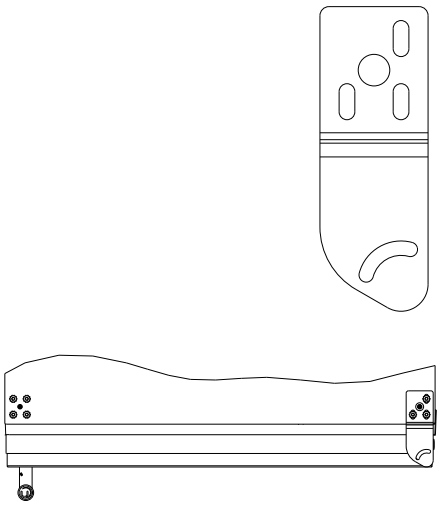

NOTICE

Properly aligned, the door's gasket should be firmly in contact with the cabinet all the way around the door (no gaps). Carefully examine the door's gasket to ensure that it is firmly in contact with the cabinet. Also make sure the door gasket is not pinched on the hinge side of the door.

To align and adjust the door:

1. Remove grille (see GRILLE-PLINTH INSTALLATION).
2. Loosen (do not remove) top and bottom hinge screws.
3. Align door squarely with cabinet.
4. Make sure gasket is firmly in contact with cabinet all the way around the door (no gaps).
5. Tighten bottom hinge screws.
6. Tighten top hinge screws.

REVERSING THE DOOR

Location of the unit may make it desirable to mount the door on the opposite side of the cabinet.

The hinge hardware will be removed and reinstalled on the opposite side of the cabinet.

TO REVERSE THE DOOR

Remove grille:

Remove the grille (see the GRILLE-PLINTH INSTALLATION section of this guide).

Remove door:

1. Hold door to keep it from falling.
2. Remove top hinge from cabinet by removing three screws.

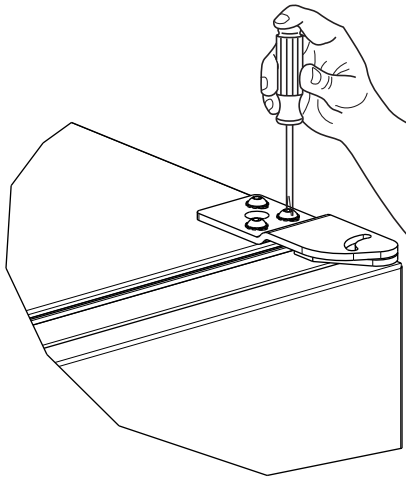

3. Remove bottom hinge from cabinet by removing three screws. Support the door and hinge assembly and remove it from the cabinet.

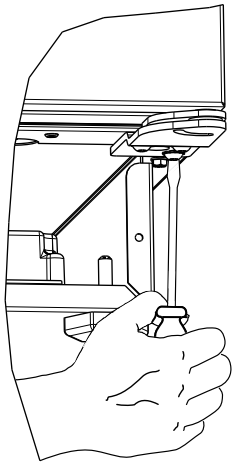

4. Remove four screws from hinge holes on the opposite side. Reinstall into holes where the hinge was removed. Take care not to scratch cabinet.

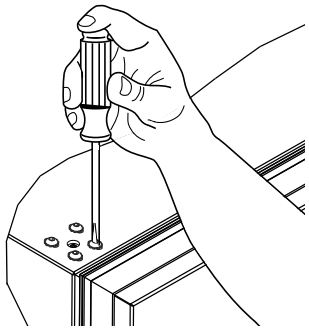

5. Remove it from the cabinet. Repeat for cabinet base.

Prepare door for reinstallation:

1. Rotate door 180° to reverse.

2. Align the flat edge of the hinge with the outer edge of the cabinet.

3. Hold door to keep from falling.

4. Tighten three screws.

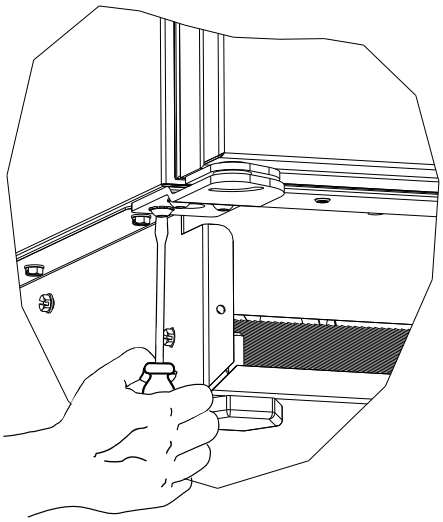

5. Align flat edge of the hinge with the outer edge of the unit.

6. Tighten three screws.

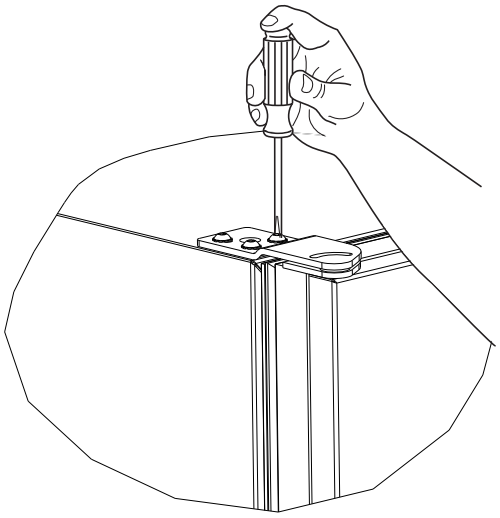

Align and adjust the door:

Align and adjust the door (see DOOR ALIGNMENT AND ADJUSTMENT).

Install grille:

Install the grille.

First Use

All U-Line controls are preset at the factory. Initial startup requires no adjustments.

NOTICE

U-Line recommends allowing the unit to run overnight before loading with product.

When plugged in, the unit will begin operating under the factory default settings. If the unit was turned off during installation, simply press ⏻ and the unit will immediately switch on. To turn the unit off, press ⏻.

Control Operation

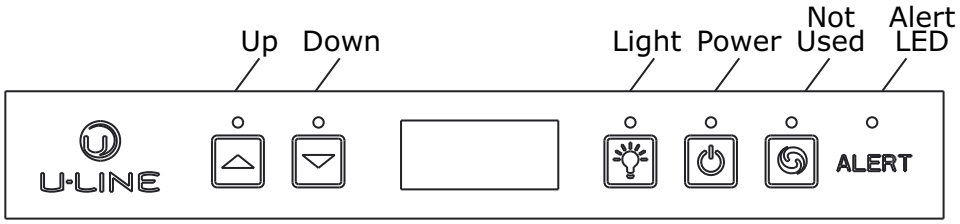

CONTROL FUNCTION GUIDE

FUNCTION	COMMAND	DISPLAY/OPTIONS
ON/OFF	Press ⏻ and release	Unit will immediately turn ON or OFF.
Toggle lights	Press 💡 and release to leave interior light on for 3 hours	Glass door wine and beverage centers only.
Adjust refrigerator set point	Press ▲ or ▼ and release	When the “F” or “C” in the display is flashing, press ▲ or ▼ to adjust the set point temperature.
View temperature in unit	Press ▲ and ▼ together and release	The display will flash and then toggle from set point to temperature in unit.
Toggle between F/C	Hold ▲ and ▼ for five seconds	The display will change units.

DOOR ALERT NOTIFICATION

When the door is left open for more than 5 minutes:

- An audible tone will sound for several seconds every minute.
- The Alert LED will blink.

Close door to silence alert and reset.

Sabbath Mode

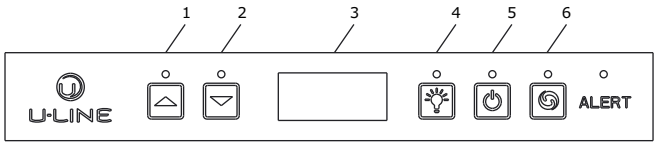

This unit is Star-K certified and offers a Sabbath mode. Sabbath mode disables system responses to user initiated activities and all external functions, including lighting, display and audible alarms. The unit will still maintain internal temperatures and set points. View a full list of Star-K certified U-Line units at www.star-k.org.

To enable Sabbath Mode:

1. Press (4) and hold for ten seconds and release (the °F/°C symbol will flash briefly at the end of the ten second period).

2. The interior light and control display (3) will go dark until user resets mode.

3. NOTE: Although the display will not be visible, the temperature controls in the unit remain active and preserve the interior temperature.

Sabbath Mode remains active until (4) is quickly pressed and released.

Airflow and Product Loading

NOTICE

The unit requires proper airflow to perform at its highest efficiency. Do not block the front grille, internal fans or vents at any time, or the unit will not perform as expected. When loading your unit, leave space between the internal fans or vents and product loaded. Anything blocking the required airflow/circulation will result in uneven temperature distribution in the cabinet and can also freeze product. Do not install the unit behind a door.

When properly loaded, your U-Line unit will store up to 140 (12 oz. [330 ml]) cans or 70 (12 oz. [330 ml]) bottles.

For optimal airflow, leave approximately two inches of space around the fan and one inch around the back wall and lower vents.

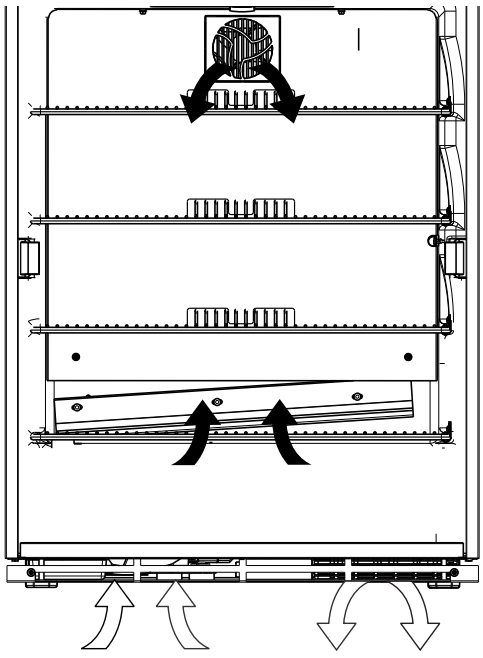

Interior Shelves

WIRE SHELF REMOVAL AND INSTALLATION

For ADA models equipped with wire racks, reposition the shelves as follows:

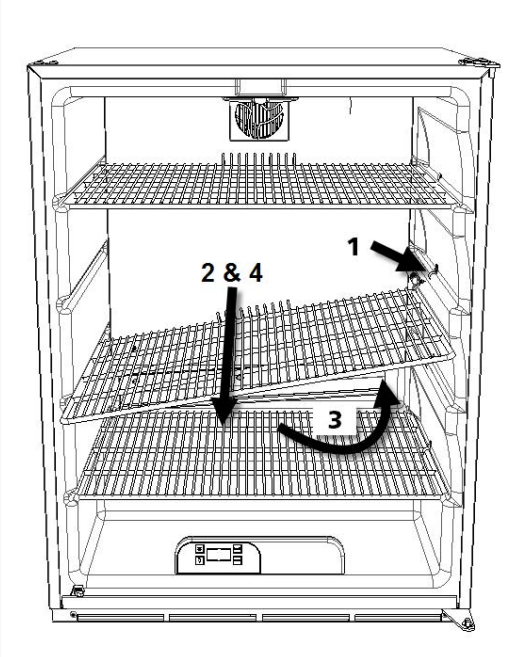

1. Remove shelf retention clip.
2. Pull shelf out about 6" (1), until back of shelf clears the “hump” on the right-hand side.
3. Tilt up right-hand edge of shelf (2).
4. Remove shelf from unit by pulling out (3).

Insert the shelves as follows:

1. To move to a different position in the unit, insert shelf at an angle, approximately 15-20°, over the rib in the side of the unit where you want to place the shelf. The shelf must be started into the unit at an angle to clear the door.
2. Continue to slide the shelf into the unit at an angle until it clears the door.
3. Lower the shelf and push it in completely.
4. Install shelf retention clip.

Cleaning

EXTERIOR CLEANING

Vinyl Clad (Black or White)

Clean surfaces with a mild detergent and warm water solution. Do not use solvent-based or abrasive cleaners. Use a soft sponge and rinse with clean water. Wipe with a soft, clean towel to prevent water spotting.

Clean any glass surfaces with a non-chlorine glass cleaner.

Stainless Models

Stainless door panels, handles and frames can discolor when exposed to chlorine gas, pool chemicals, saltwater or cleaners with bleach.

Keep your stainless unit looking new by cleaning with a good quality all-in-one stainless steel cleaner and polish monthly. For best results use Claire® Stainless Steel Polish and Cleaner. Comparable products are acceptable. Frequent cleaning will remove surface contamination that could lead to rust. Some installations may require cleaning weekly.

Do not clean with steel wool pads.

Do not use stainless steel cleaners polishes on any glass surfaces.

Clean any glass surfaces with a non-chlorine glass cleaner.

Do not use cleaners not specifically intended for stainless steel on stainless surfaces (this includes glass, tile and counter cleaners).

If any surface discoloring or rusting appears, clean it quickly with Bon-Ami® or Barkeepers Friend Cleanser® and a nonabrasive cloth. Always clean with the grain. Always finish with Claire® Stainless Steel Polish and Cleaner or comparable product to prevent further problems.

Using abrasive pads such as Scotchbrite™ will cause the graining in the stainless steel to become blurred.

Rust not cleaned up promptly can penetrate the surface of the stainless steel and complete removal of the rust may not be possible.

Integrated Models

To clean integrated panels, use household cleaner per the cabinet manufacturer's recommendation.

INTERIOR CLEANING

Disconnect power to the unit.

Clean the interior and all removed components using a mild nonabrasive detergent and warm water solution applied with a soft sponge or non-abrasive cloth.

Rinse the interior using a soft sponge and clean water.

Do not use any solvent-based or abrasive cleaners. These types of cleaners may transfer taste to the interior products and damage or discolor the interior.

DEFROSTING

Under normal conditions this unit does not require manual defrosting. Minor frost on the rear wall or visible through the evaporator plate vents is normal and will melt during each off cycle.

If there is excessive build-up of 1/4" (6 mm) or more, manually defrost the unit.

Ensure the door is closing and sealing properly.

High ambient temperature and excessive humidity can also produce frost.

⚠ CAUTION

DO NOT use an ice pick or other sharp instrument to help speed up defrosting. These instruments can puncture the inner lining or damage the cooling unit. DO NOT use any type of heater to defrost. Using a heater to speed up defrosting can cause personal injury and damage to the inner lining.

NOTICE

The drain pan was not designed to capture the water created when manually defrosting. To prevent water from overflowing the drain pan, place towels or other absorbent materials over the interior drain trough (under the evaporator) before defrosting.

To defrost:

1. Disconnect power to the unit.
2. Remove all products from the interior.
3. Prop the door in an open position (2 in. [50 mm] minimum).
4. Allow the frost to melt naturally.
5. After the frost melts completely clean the interior and all removed components. (See INTERIOR CLEANING).
6. When the interior is dry, reconnect power and turn unit on.

Cleaning Condenser

INTERVAL - EVERY SIX MONTHS

To maintain operational efficiency, keep the front grille free of dust and lint, and clean the condenser when necessary. Depending on environmental conditions, more or less frequent cleaning may be necessary.

⚠ WARNING

Disconnect electric power to the unit before cleaning the condenser.

⚠ WARNING

DO NOT touch the condenser fins. The condenser fins are SHARP and can be easily damaged.

NOTICE

DO NOT use any type of cleaner on the condenser unit.

1. Remove the grill (See GRILLE INSTALLATION).

2. Clean the condenser coil using a using a soft brush with a “combing” action or vacuum cleaner. Do not touch the condenser coil.

3. Install the grille.

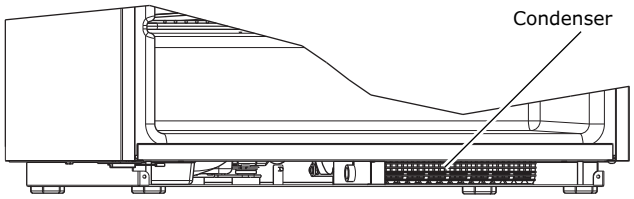

Extended Non-Use

VACATION/HOLIDAY, PROLONGED SHUTDOWN

The following steps are recommended for periods of extended non-use:

1. Remove all consumable content from the unit.
2. Disconnect the power cord from its outlet/socket and leave it disconnected until the unit is returned to service.
3. If ice is on the evaporator, allow ice to thaw naturally.
4. Clean and dry the interior of the unit. Ensure all water has been removed from the unit.
5. The door must remain open to prevent formation of mold and mildew. Open door a minimum of 2" (50 mm) to provide the necessary ventilation.

WINTERIZATION

If the unit will be exposed to temperatures of 40°F (5°C) or less, the steps above must be followed.

For questions regarding winterization, please call U-Line at 414.354.0300.

⚠ CAUTION

Damage caused by freezing temperatures is not covered by the warranty.

Troubleshooting

BEFORE CALLING FOR SERVICE

If you think your U-Line product is malfunctioning, read the CONTROL OPERATION section to clearly understand the function of the control.

If the problem persists, read the NORMAL OPERATING SOUNDS and TROUBLESHOOTING GUIDE sections below to help you quickly identify common problems and possible causes and remedies. Most often, this will resolve the problem without the need to call for service.

IF SERVICE IS REQUIRED

If you do not understand a troubleshooting remedy, or your product needs service, contact U-Line Corporation directly at +1.414.354.0300.

When you call, you will need your product Model and Serial Numbers. This information appears on the Model and Serial number plate located on the upper right or rear wall of the interior of your product.

NORMAL OPERATING SOUNDS

All models incorporate rigid foam insulated cabinets to provide high thermal efficiency and maximum sound reduction for its internal working components. Despite this technology, your model may make sounds that are unfamiliar.

Normal operating sounds may be more noticeable because of the unit's environment. Hard surfaces such as cabinets, wood, vinyl or tiled floors and paneled walls have a tendency to reflect normal appliance operating noises.

Listed below are common refrigeration components with a brief description of the normal operating sounds they make. NOTE: Your product may not contain all the components listed.

- Compressor: The compressor makes a hum or pulsing sound that may be heard when it operates.
- Evaporator: Refrigerant flowing through an evaporator may sound like boiling liquid.
- Condenser Fan: Air moving through a condenser may be heard.
- Automatic Defrost Drain Pan: Water may be heard dripping or running into the drain pan when the unit is in the defrost cycle.

TROUBLESHOOTING GUIDE

⚠ DANGER

ELECTROCUTION HAZARD. Never attempt to repair or perform maintenance on the unit before disconnecting the main electrical power.

Troubleshooting - What to check when problems occur:

Problem	Possible Cause and Remedy
Digital Display and Light Do Not Work.	Ensure power is connected to the unit. If the unit is cooling, it may be in Sabbath mode.
Interior Light Does Not Illuminate.	The light bulb may be defective. If the unit is cooling, it may be in Sabbath mode.
Light Remains on When Door Is Closed.	For glass door models, press the light icon and close the door. Check reed switch.
Unit Develops Frost on Internal Surfaces.	Frost on the rear wall is normal and will melt during each off cycle. If there is excessive build-up of 1/4" or more, manually defrost the unit. Ensure the door is closing and sealing properly. High ambient temperature and excessive humidity can also produce frost.
Unit Develops Condensation on External Surfaces.	The unit is exposed to excessive humidity. Moisture will dissipate as humidity levels decrease.
Digital Display Functions, But Unit Does Not Cool.	Ensure the unit is not in "Showroom Mode." Momentarily unplug or interrupt power supply to the unit.
Digital Display Shows ER or E Followed by a Number.	E3 indicates the door may be opened too long. Ensure the door is closing properly. For other error codes contact U-Line Customer Service.

Problem	Possible Cause and Remedy
Digital Display Shows 1-16 or 99	A factory test mode may be enabled. Adjust the temperature to 99 and press the LIGHT icon.
Product Is Freezing.	Because product in contact with the rear wall may freeze, ensure no product is touching the rear wall. Adjust the temperature to a warmer set point.
Product Is Not Cold Enough.	Air temperature does not indicate product temperature. See CHECKING PRODUCT TEMPERATURE below. Adjust the temperature to a cooler set point. Ensure unit is not located in excessive ambient temperatures or in direct sunlight. Ensure the door is closing and sealing properly. Ensure the interior light has not remained on too long. Ensure nothing is blocking the front grille, found at the bottom of the unit. Ensure the condenser coil is clean and free of any dirt or lint build-up.

CHECKING PRODUCT TEMPERATURE

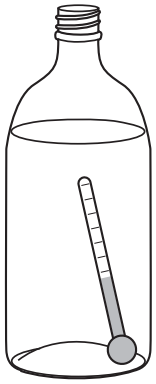

To check the actual product temperature in the unit:

1. Partially fill a plastic (nonbreakable) bottle with water.
2. Insert an accurate thermometer.
3. Tighten the bottle cap securely.
4. Place the bottle in the desired area for 24 hours.
5. Avoid opening the unit during the testing period.
6. After 24 hours, check the temperature of the water. If required, adjust the temperature control in a small increment (see CONTROL OPERATION).

Causes which affect the internal temperatures of the cabinet include:

- Temperature setting.
- Ambient temperature where installed.
- Installation in direct sunlight or near a heat source.
- The number of door openings and the time the door is open.
- The time the internal light is illuminated. (This mainly affects product on the top rack or shelf.)

Wire Diagram

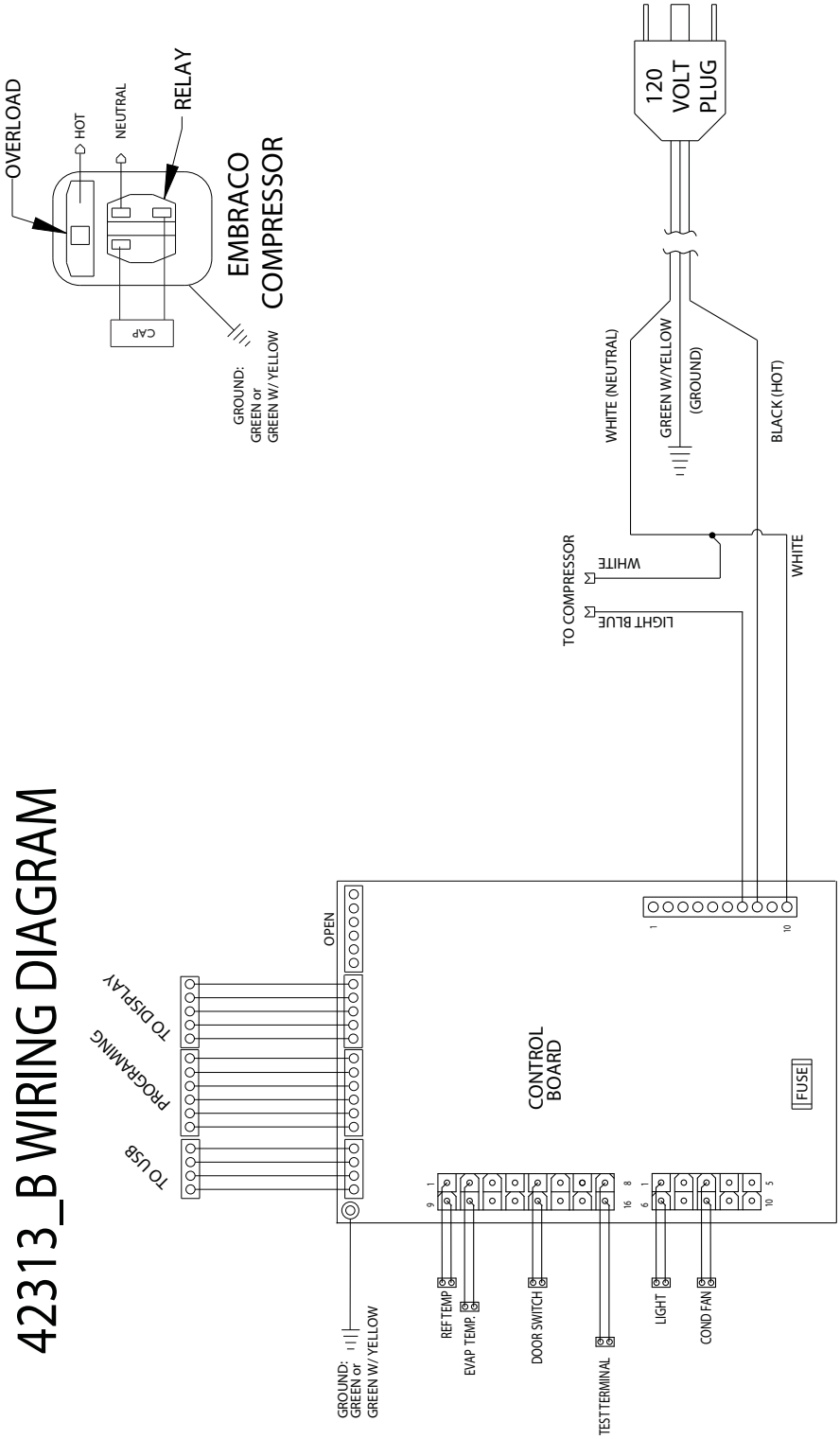

Product Liability

Field service technicians are authorized to make an initial assessment in the event of reported damages. If there are any questions about the process involved, the technician should call U-Line for further explanation.

While inspecting for defects or installation issues, photos should be taken to document any damages or issues found.

During the assessment, if the service technician is able to find the source of the damage and it can be resolved by replacement of a part, the servicer is authorized to replace the part in question. The part that caused the damage must be returned to U-Line in its entirety. The part must be clearly labeled with the serial number of the unit it was removed from, the date, and the servicer who removed the part.

If the service technician determines the damage is the result of installation issues (water connection/drain, etc.), the consumer would be notified and the issues shall be resolved at the direction of the consumer.

If damage is evident and the service technician is unable to find the source, U-Line must be contacted at 1-800-799-2547 for further direction

8900 N. 55th Street • Milwaukee, WI 53223
T: +1.414.354.0300 • F: +1.414.354.354.5696
Website: www.u-line.com

Right product. Right place.
Right temperature Since 1962.

Warranty Claims

The following information defines the parameters for filing a warranty claim:

- Valid serial number needed
- Valid model number needed
- Narda (or equivalent) form or submitted online at www.u-line.com
- 60 day submittal deadline from date of completed service
- Only one repair or unit per warranty claim
- Refrigerant should be labeled and included on the labor submittal
- Door and water level adjustments are covered 30 days from install date.

Serial Number Requirements:

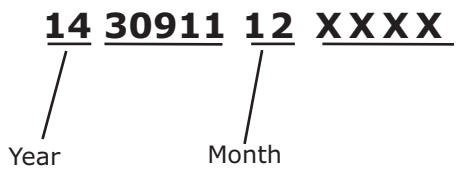

A typical serial number is shown above. The first two digits of the first segment, 14, represents the production year. The number between the dashes, 12, represents the production month. In most cases, warranty status can be verified by the production date information within the serial number.

- Alternatively, a Proof of Purchase (or equivalent) may submitted with the warranty claim to document warranty status. We also accept the following information to verify warranty status:
- New Construction Occupancy Documents
- Closing Paperwork
- Final Billing – Remodel

Noting all of the following on the warranty claim will be considered proof of purchase, hard copy will not be required:

- Name of the selling Dealer
- Date of purchase/installation
- Order or Invoice number (if available)
- Description of document reviewed (i.e. store receipt, closing paperwork, etc)

Parts and labor claims are paid separately. Indicate part numbers and description for parts used in the warranty repair. Include the purchase invoice and name of the parts supplier used to procure the parts.

Parts

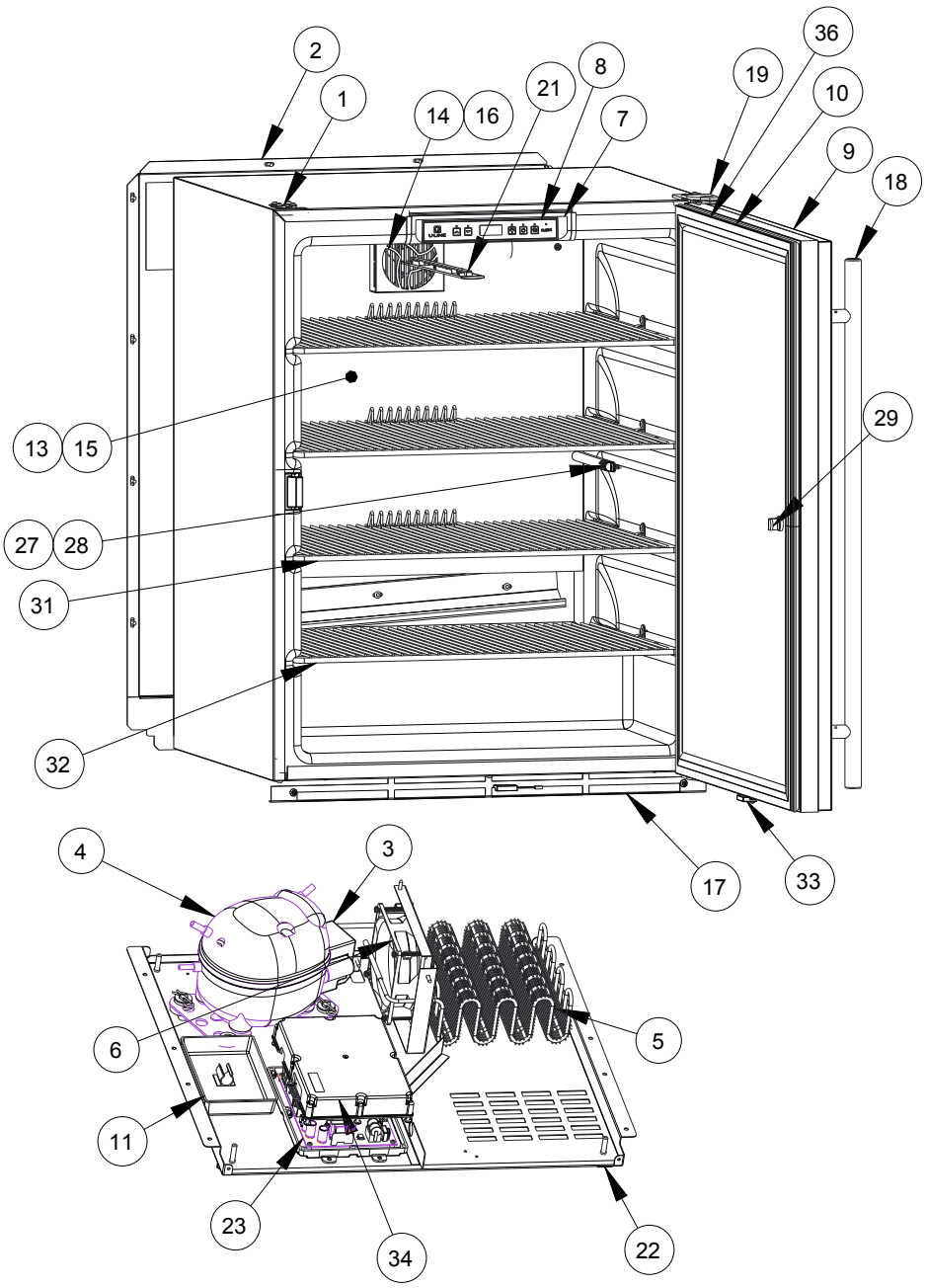

U-ADA24RB-13A		
Item	Description	U-Line P/N
1	Anti tip bracket w/screws	80-54239-00
2	Back panel	80-54324-00
3	Compressor electricals only	80-54149-00
4	Compressor w/electricals	80-54150-00
5	Condenser assembly	80-54322-00
6	Condenser fan w/screws	80-54014-00
7	Control Housing	80-54259-00
8	Display module	80-54510-00
9	Door assembly w/hinges	80-54326-00
10	Gasket, door	80-54507-00
11	Drain pan w/double sided tape	80-54323-00
12	Drier	80-54055-00
13	Evaporator assembly	80-54275-00
14	Evaporator fan cover w/screws	80-54320-00
15	Evaporator cover w/screws	80-54319-00
16	Evaporator fan	80-54321-00
17	Grille w/screws	80-54325-00
18	Handle w/logo	80-54214-00
19	Hinges (2) w/screws	80-54506-00
20	Keys, babylock	80-54330-00
21	LED light strip and cover assy	80-54000-00
22	Leg Levelers (4)	80-54201-00
23	Main board w/inst sheet	80-54297-00
24	Packaging	80-54209-00
25	Power cord	80-54512-00
26	Reed switch	80-54134-00
27	Thermistor (1 pc)	80-54006-00
28	Thermistor cover and pin	80-54237-00
29	Universal lock assembly	80-54153-00
30	Wire harness, board	80-54552-00
31	Wire shelf w/clips(1)	80-54328-00
32	Wire shelf btm, w/clips(1)	80-54329-00
33	ADA mounting bracket	80-54133-00
34	Enclosure asm, board	80-54532-00
35	drain tube	80-54500-00
36	Gasket, For injection molded	80-54213-00

R-600A Specifications

For R-600a refrigerant service tips and more videos, go to: www.u-line.com/videos.

⚠ WARNING

Flammability warnings for a pure-iso-butane refrigerant.







Technician must observe all federal, state and local laws regarding refrigerants.

Gloves and Eye Protection must be used.





R-600a is considered non-toxic, but is flammable when mixed with air.

Keep a dry powder type fire extinguisher in the work area.



R-600a is heavier than air, do not allow any leakage/migration to low areas such as basements and stairs.

Never use a torch on a fully charged refrigeration system.

Never substitute U-Line OEM replacement parts or methods of construction.

R-600a must be stored and transported in approved containers.

⚠ WARNING

Only skilled and well trained service technicians permitted to service R-600a equipped products.

All tools and equipment must be approved for use with R-600a refrigerant.

Local, state and federal laws, standards must be observed along with proper certification and licensing.

Ventilation is required during servicing.

No conversions to R-600a from any other refrigerants. OEM R-600a equipped unit only.

Service area must be free of ignition sources.

No smoking is allowed in the service area.

All replacement electrical components must be OEM and installed properly (sealed and covered).

If the evaporator is cold prior to service, it must be thawed prior to service.

When using a vacuum pump, start pump before opening refrigeration system.

Vacuum pump and recovery equipment should be at least 10 feet from the work area.

It is recommended that a simple LPG gas detector is on site during service.

Ensure that all R-600a is removed from the system prior to brazing any part of the sealed system.

Only a clean, dry leak free system should be charged with R-600a.

R-600A SPECIFICATIONS/LABELING

R-600a equipped products are labeled (both the unit and the compressor).

R-600a is colorless and odorless.

R-600a is considered non-toxic, but is flammable when mixed with air.

Do not remove or alter any R-600a labeling on the product.

Use only a refrigerant grade R-600a from a properly labeled container.

RECOVERING/RECLAIMING R-600A

(R-600a has been exempted from recovery/reclaiming requirements by the US EPA)

Recovery/Reclaiming equipment must be approved for use with R-600a.

Ensure the evaporator is at room temperature prior to recovery/reclaiming R-600a.

Use a common piercing pliers or piercing valve to remove R-600a from the compressor process tube. (Note: Piercing devices must not be left on the system and must be replaced with a Schrader type valve.)

Evacuate/reclaim via the piecing pliers to ensure the system is empty of R-600a before any system work is performed.



The recovery cylinder must be evacuated (no air inside) prior to accepting R-600a.

The recovery cylinder must not be filled more than 45% safe fill level and refrigerants must not be mixed.

The recovery cylinder must be clearly marked with R-600a and Flammable Warning labels.

Ensure proper ventilation during recovery/reclaiming of R-600a.

Start vacuum pump/recovery pump prior to piercing the compressor process tube.

Follow recovery/reclaim OEM instructions for the specific equipment used.

SYSTEM REPAIR

Ensure no residual R-600a refrigerant is left within the system prior to repair (simple venting is not sufficient).

Evacuate and charge with dry nitrogen for leak checks.

Repair leaks or replace system parts as required.

When re-brazing, the system must be purged with dry nitrogen and at least one access point open to the atmosphere.

When re-brazing, proper ventilation is required along with constant monitoring for the presence of R600a refrigerant.

The filter dryer must be replaced any time the sealed system is serviced.

No system should be open to the atmosphere for longer than 15 minutes to avoid moisture migration into the system components.

LEAK DETECTION

After removal of the R-600a, the unit can be charged with dry nitrogen or helium.

Electronic leak detection or soap solution can be used to check for nitrogen/helium leaks.



Never use a halide torch or lighted match to check the system for leaks at any time.

The high side of the refrigeration system (compressor discharge to outlet of drier) must be leak tested with the compressor running.

The low side of the refrigeration system (evaporator, compressor and suction line) must be leak tested with the compressor off (equalized pressure).

RECHARGING

No air is ever to be allowed inside the refrigeration system (R-600a refrigerant or dry nitrogen only).

Never use a torch on a fully charged refrigeration system.

Install a Schrader Type access port on the compressor process stub.



Evacuate the system to 100 microns prior to charging.

Weigh in the R-600a charge using a refrigerant scale. (run compressor an extra two minutes to clear the charging hoses).

Seal the Schrader Type access port, a proper cap and seal must be used to close the system.



SUMMARY

Safely handling R-600a requires proper procedures and training.

R-600a approved service tools must be used.

R-600a labeling must not be removed or altered.

Proper ventilation during service is required.

Never apply a torch to a charged R-600a refrigeration system.

Use OEM replacement service parts and do not alter the construction of the unit.

System Diagnosis Guide

REFRIGERATION SYSTEM DIAGNOSIS GUIDE

System Condition	Suction Pressure	Suction Line	Compressor Discharge	Condenser	Capillary Tube	Evaporator	Wattage
Normal	Normal	Slightly below room temperature	Very hot	Very hot	Warm	Cold	Normal
Overcharge	Higher than normal	Very cold may frost heavily	Slightly warm to hot	Hot to warm	Cool	Cold	Higher than normal
Undercharge	Lower than normal	Warm-near room temperature	Hot	Warm	Warm	Extremely cold near inlet - Outlet below room temperature	Lower than normal
Partial Restriction	Somewhat lower than normal vacuum	Warm - near room temperature	Very hot	Top passes warm - Lower passes cool (near room temperature) due to liquid	Room temperature (cool) or colder	Extremely cold near inlet - Outlet below room temperature backing up	Lower than normal
Complete Restriction	In deep vacuum	Room temperature (cool)	Room temperature (cool)	Room temperature (cool)	Room temperature (cool)	No refrigeration	Lower than normal
No Gas	0 PSIG to 25"	Room temperature (cool)	Cool to hot	Room temperature (cool)	Room temperature (cool)	No refrigeration	Lower than normal

Compressor Specifications

⚠ DANGER

Electrocution can cause death or serious injury. Burns from hot or cold surfaces can cause serious injury. Take precautions when servicing this unit.

Disconnect the power source.

Do not stand in standing water when working around electrical appliances.

Make sure the surfaces you touch are not hot or frozen.

Do not touch a bare circuit board unless you are wearing an anti-static wrist strap that is grounded to an electrical ground or grounded water pipe.

Handle circuit boards carefully and avoid touching components.

To measure the start winding resistance, measure across the C and S pins.

To measure the run winding resistance, measure across the C and R pins.

Also check S to R and you should get the sum of the run and start windings.

To ensure the windings are not shorted, check the S and R to ground.

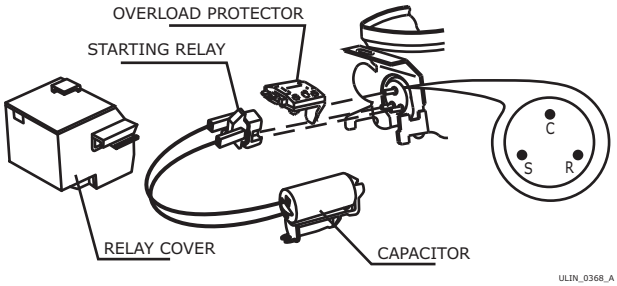

	EMX20CLC
Refrigerant	R600a
Voltage	115 - 127 VAC
Frequency	60 Hz
Run Cap	12µF/165 VAC
Start Winding	6.7 Ohm at 77°F
Run Winding	12.6 Ohm at 77°F
LRA	3.7 A
FLA	0.5 A
Starting Device	8EA14C
Overload	4TM142RFBYY-53

* All resistance readings are ±10%

Troubleshooting - Extended

SPECIFIC ERRORS & ISSUES

⚠ CAUTION

Never attempt to repair or perform maintenance on the unit until the main electrical power has been disconnected from the unit.

TROUBLESHOOTING GUIDE

Concern	Potential Causes	Suggested Remedy
Not Cooling	Compressor overheating	Verify proper air flow through condenser. (Refer to Airflow/General information Section of this manual)
		Confirm condenser fan operation. (Refer to Airflow/General information Section of this manual)
	Compressor not operating	Test overload and relay, replace as needed.
	Compressor operating - no cooling	Refer to Refrigeration System Diagnosis Guide Section of this manual.
	Evaporator fan not operating, convect cool models only	Refer to Convection Cooling Section of this manual. convect cool models only
Frozen Product	Control set too cold	Refer to Adjusting Air Temperature Section of this manual.
Frost Buildup Inside Unit	Door ajar or restricted from closing	Inspect/Repair door closure, adjust as needed.
Internal Lights Not Working	Door switch misaligned or defective	Check light switch, wiring and actuator. Adjust as needed.
	Door switch misaligned or defective electronic control models only	Refer to Reed Switch Section of this manual. electronic control models only
Noisy	Refrigeration tubing touching cabinet	Carefully reposition tubing.
	Fan blade obstruction (wiring, foam insulation, packaging material)	Remove obstruction.
Ice Buildup In Drain Trough or Drain Problem	Obstructed drain cup or tube	Clear as needed, test flow.
	Kinked condensate drain line	Reroute condensate drain line and test flow.
	Drain trough and cup misaligned	Trough is slotted for adjustment. Loosen retainers and adjust as needed.

ICE MAKER DIAGNOSIS FLOW CHART

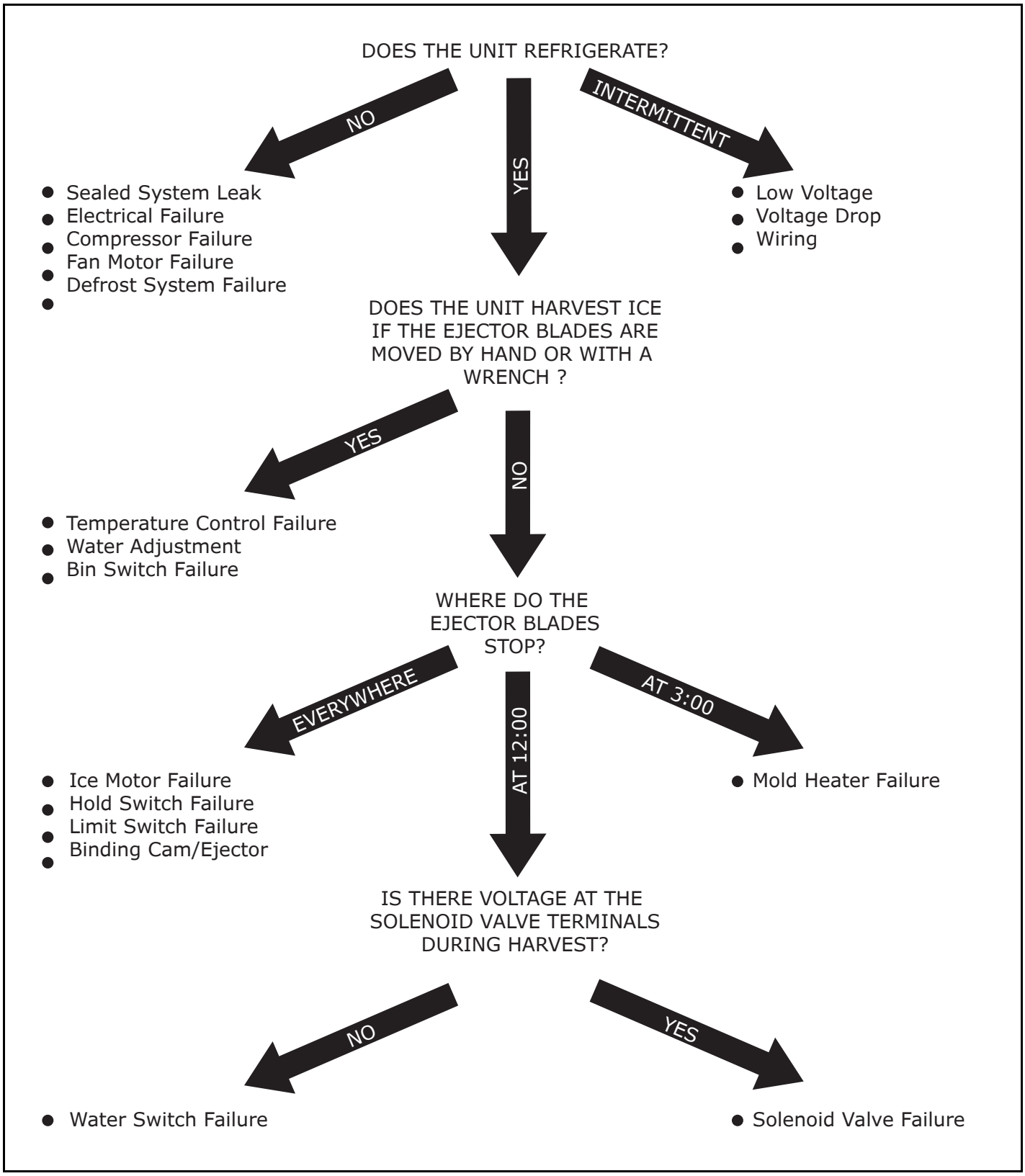

PRODUCT TEMPERATURE

Causes which affect the internal temperatures of the cabinet include:

- Temperature setting.
- Ambient temperature where installed.
- Installation in direct sunlight or near a heat source.
- The number of door openings and the time the door is open.
- The time the internal light is illuminated. (This mainly affects product on the top rack or shelf.)
- The front grille or condenser are obstructed.

NORMAL OPERATING SOUNDS

All models incorporate rigid foam insulated cabinets to provide high thermal efficiency and maximum sound reduction for its internal working components. Despite this technology, your model may make sounds that are unfamiliar.

Normal operating sounds may be more noticeable because of the unit's environment. Hard surfaces such as cabinets, wood, vinyl or tiled floors and paneled walls have a tendency to reflect normal appliance operating noises.

Listed below are common refrigeration components with brief description of the normal operating sounds they make. NOTE: Your product may not contain all the components listed.

- Compressor: The compressor makes a hum or pulsing sound that may be heard when it operates.
- Evaporator: Refrigerant flowing through an evaporator may sound like boiling liquid.
- Condenser Fan: Air moving through a condenser may be heard.
- Automatic Defrost Drain Pan: Water may be heard dripping or running into the drain pan when the unit is in the defrost cycle.

REFRIGERATION SYSTEM DIAGNOSIS GUIDE

System Condition	Suction Pressure	Suction Line	Compressor Discharge	Condenser	Capillary Tube	Evaporator	Wattage
Normal	Normal	Slightly below room temperature	Very hot	Very hot	Warm	Cold	Normal
Overcharge	Higher than normal	Very cold - may frost heavily	Slightly warm to hot	Hot to warm	Cool	Cold	Higher than normal
Undercharge	Lower than normal	Warm - near room temperature	Hot	Warm	Warm	Extremely cold near inlet - outlet below room temperature	Lower than normal
Partial Restriction	Somewhat lower than normal - in vacuum	Warm - near room temperature	Very hot	Top passes warm lower passes cool (near room temperature due to liquid	Room temperature (cool) or colder	Extremely cold near inlet - outlet below room temperature backing up	Lower than normal
Complete Restriction	In deep vacuum	Room temperature (cool)	Room temperature (cool)	Room temperature (cool)	Room temperature (cool)	No refrigeration	Lower than normal
No Gas	0 PSIG to 25"	Room temperature (cool)	Cool to hot	Room temperature (cool)	Room temperature (cool)	No refrigeration	Lower than normal

ICE MAKER OPERATING CYCLES

Freeze Cycle

Temperature control terminals 2 and 3 are closed.

Power to the compressor.

Power to the condenser fan.

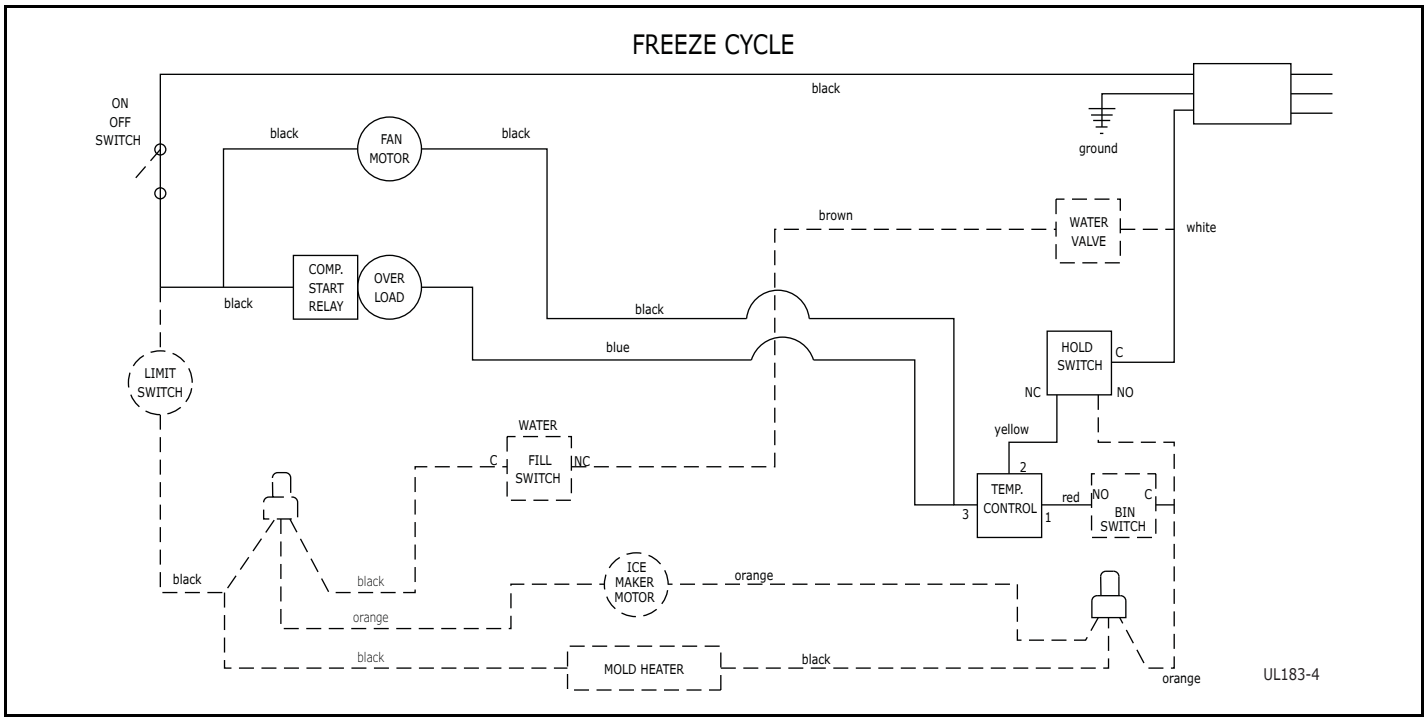

Harvest-1 Cycle

Temperature control terminals 2 and 3 are open - 2 and 1 close.

No power to the compressor or condenser fan.

If bin arm is down, power goes through bin arm switch to the ice maker motor. If bin arm is up, the ice maker will not harvest.

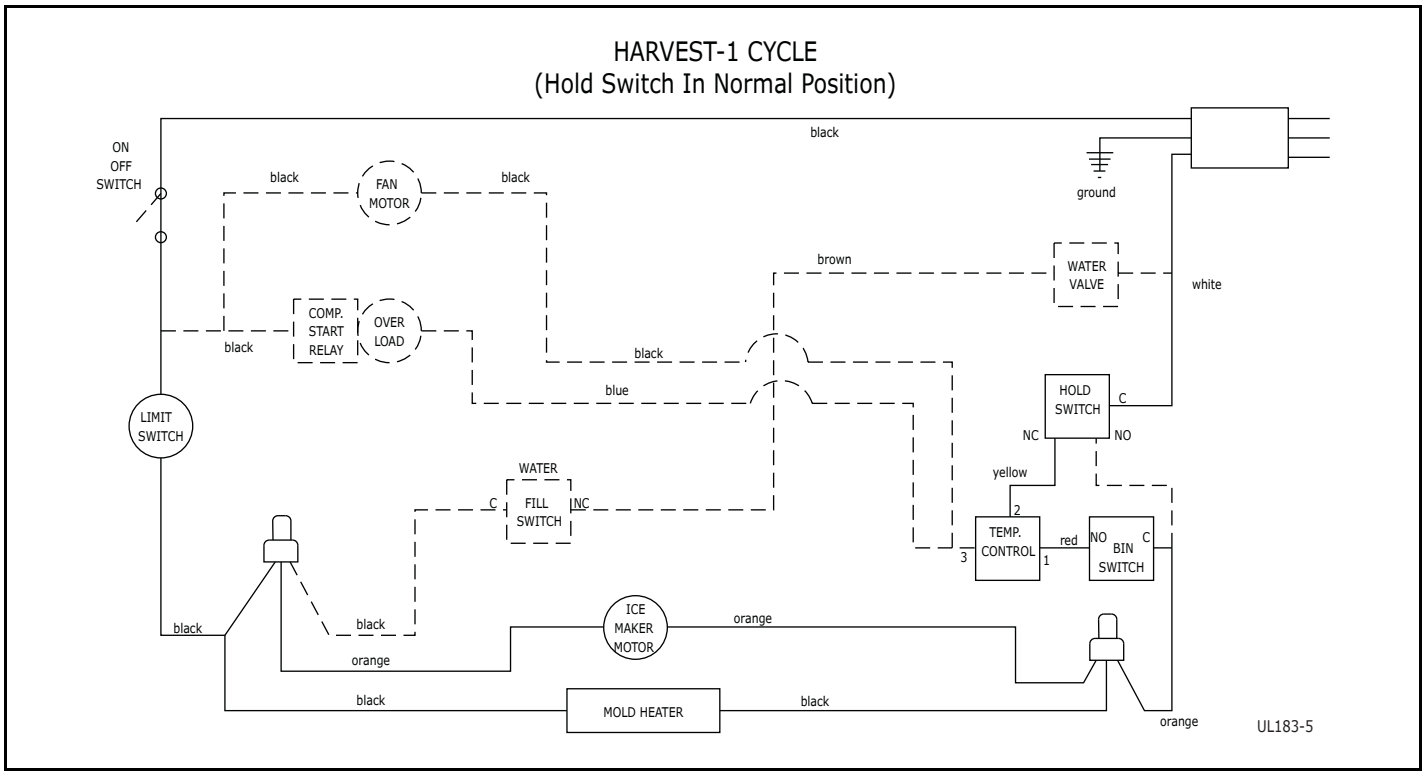

Harvest-2 Cycle

Ice maker ejector blades reach approximately 2:00 position and cam depresses the hold switch. Power goes through the hold switch to the ice maker motor and mold heater.

Ejector blades stall on ice and ice maker motor pulsates until mold heater warms and ice releases.

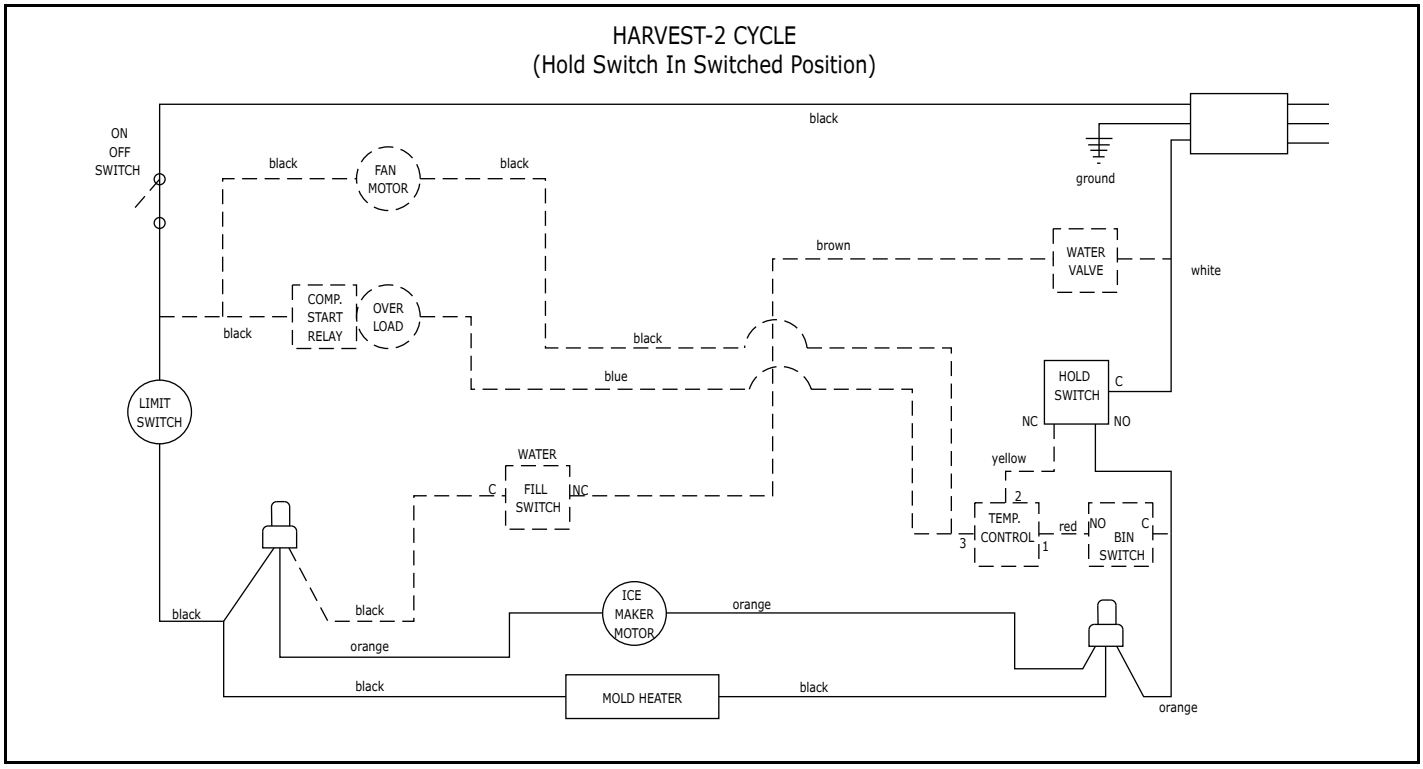

Water Fill Cycle

Ice maker ejector blades reach approximately 10:00 position and cam depresses the water fill switch.

Power to the water valve. Ice maker mold fills.

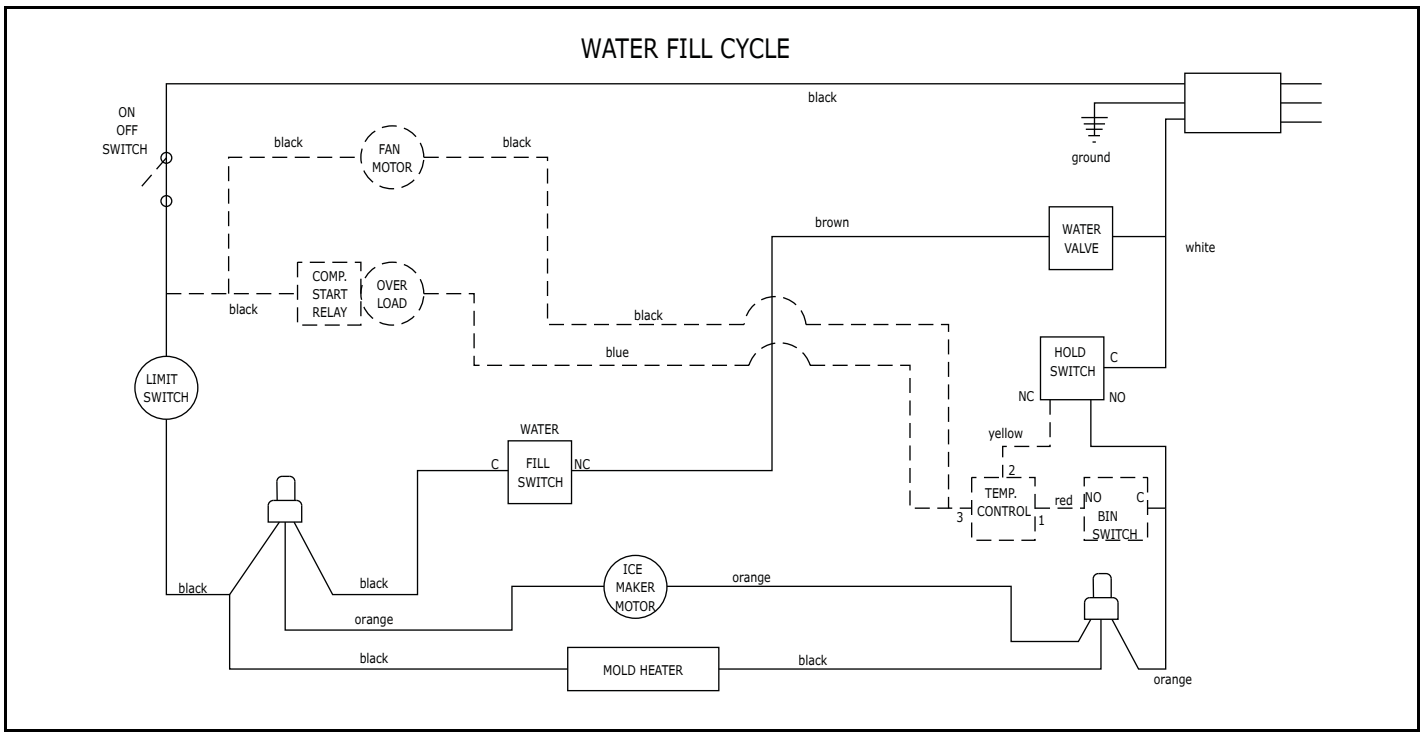

Eject Cycle

Ejector blades push ice into bucket and stop at 12:00 position.

Temperature control terminals 2 and 3 have closed during harvest cycle.

Next freeze cycle begins with power to the compressor and condenser fan.

TEMPERATURE CONTROL SPECIFICATIONS

These temperature controls are double throw, single pole controls. The sensing tube is inserted into the ice maker mold and senses mold temperature. After ice is sensed in the mold, the 2-3 contacts open (stopping the compressor) and the 2-1 contacts are closed (starting the ice maker motor). The 2-3 contacts close (2-1 contacts open) before the end of the ice harvest cycle. The hold switch prevents power going back to the compressor. This prepares the control for the next cycle.

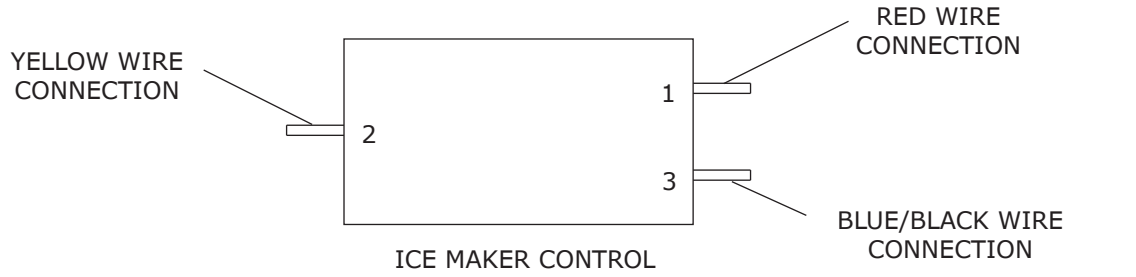

ICE MAKER CONTROL

183-8

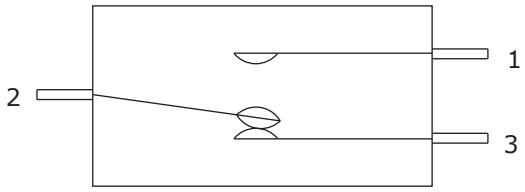

FREEZE POSITION

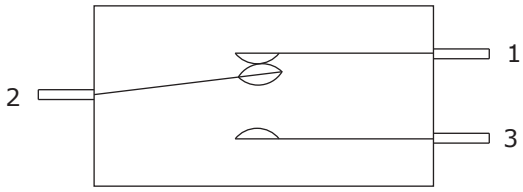

ICE HARVEST POSITION

CYCLE	OPEN CIRCUIT	CLOSED CIRCUIT
FREEZE	2 - 1	2 - 3
HARVEST	2 - 3	2 - 1

LIMIT SWITCH SPECIFICATIONS

Normally closed Bi-metal switch

Open temperature: 104°F

Close temperature: 83°F

The function of this switch is to open in the event of an overheating condition. This bi-metal thermostat is normally closed and does not initiate the ice harvest cycle. The ice harvest cycle is initiated by a double throw, single pole temperature located remotely from the ice maker assembly.

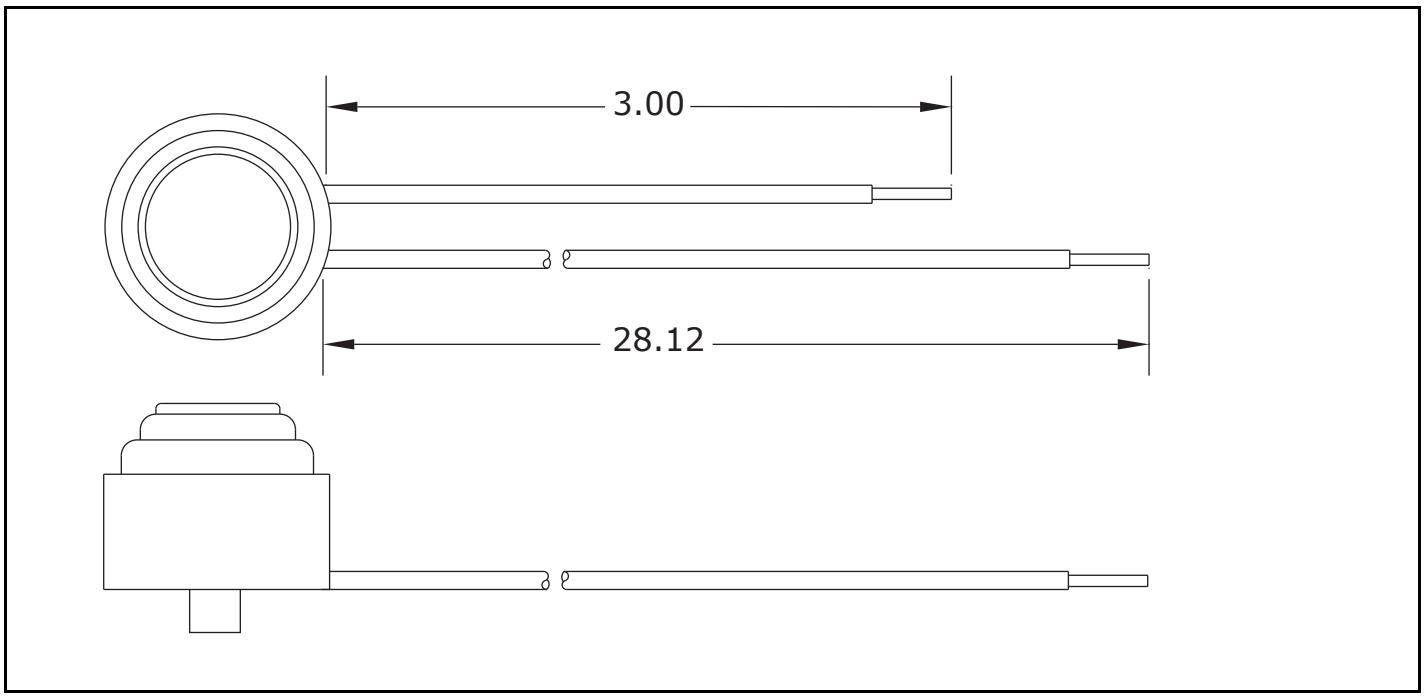

FROST FREE REFRIGERATION

Cooling Mode

Bypass solenoid closed.

Evaporator fan operating.

Refrigerant flows through capillary tubes.

Normal vapor/compression cycle refrigeration.

Defrost Mode

Bypass solenoid valve open.

Refrigerant flows through bypass system.

Vapor flows from condenser to evaporator without a phase change.

Drain heater on (U-CO29F only).

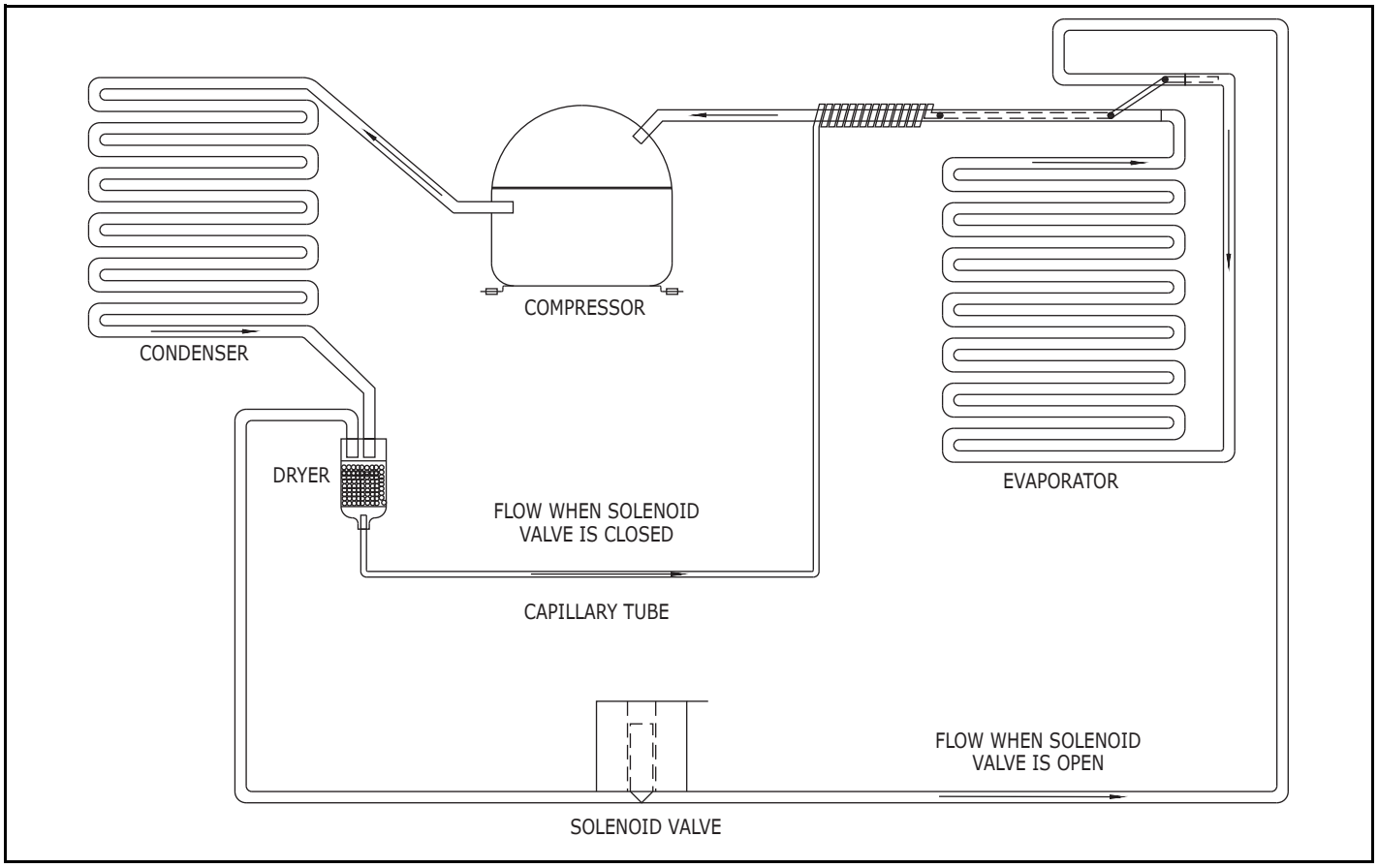

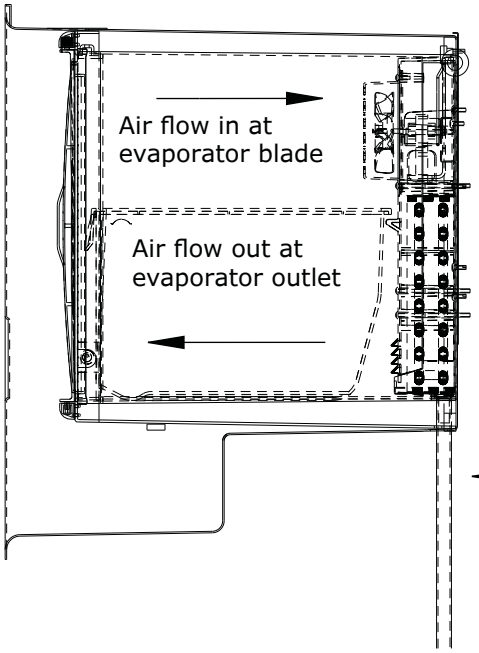

Air passes though
fin tube evaporator

Condensate drains down past the evaporator, into drain pan, and into condensate pan through drain hose. The drain trough is warmed during defrost by contact with evaporator fins. On U-CO29F model, drain trough is also warmed by drain heater attached to the drain pan.

Control Operation - Service

UI BUTTON LAYOUT

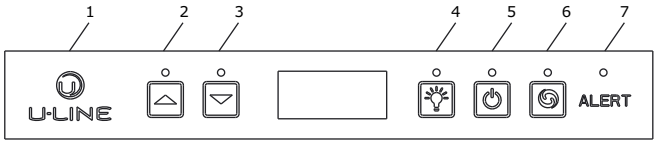

1. **Hidden Button:**
   -Accesses Service Menu
   -No LED

2. **Up Button**
   -Increases temperature
   -Navigates through service menu

3. **Down Button**
   -Decreases temperature
   -Navigates through service menu
   -LED activated with button activation

4. **Light Button**
   -Activates light for 3 hours on select models
   -Used to select items in service menu
   -LED activated with button activation

5. **Power Button**
   -Turns unit off/on
   -LED activated with button activation (only turning unit off)

6. **Clean Button**
   -Activates Clean Cycle on CLR models
   -LED activated with button activation

7. **Alert LED**
   -No button
   -Illuminates with Hidden Button
   -Illuminates with required displayed alerts

CONTROL FUNCTION GUIDE

FUNCTION	COMMAND	DISPLAY/OPTIONS
ON/OFF	Press and release ⏻	Unit will immediately turn ON or OFF
Toggle lights	Press and release 💡 to leave interior light on for 3 hours	Glass door wine captains and beverage centers only.
Adjust refrigerator set point	Push and release ⌃ or ⌄	When the “F” or “C” in the display is flashing, use ⌃ or ⌄ to adjust the set point temperature.
View temperature in unit	Push and release the ⌃ and ⌄ together	The display will flash and then toggle from set point to temperature in unit.
Toggle between F/C	Hold the ⌃ and ⌄ for five seconds	The display will change units.
Service mode	Push and hold the hidden icon for 10 seconds to enter. Then use the ⌃ and ⌄ to scroll through the service mode menu.	The display will change units.

ELECTRONIC CONTROL DESCRIPTIONS QUICK GUIDE

Except as noted, these functions are available on all models.

1. **ON/OFF**

   The ON/OFF mode allows the unit to be turned on and off via the keypad. Push/release power key to toggle ON/OFF. Internal lights will go off with power.

2. **TOGGLE LIGHT**

   On units with glass doors, touching the LIGHT key will turn on the cabinet light for 3 hours at a time. Touching the key again will turn the light off. Using the cabinet light for more than 3 hours may be detrimental to the cabinet temperature and product. Only available on BEV, WC models.

NOTICE

This does not apply to ADA24R glass door units. The light and display are always off when the glass door is closed.

3. **ADJUSTING THE SET POINT**

   To adjust the set point press and release either the WARMER or COLDER key. This will start the set point flashing. While in this mode you can adjsut the set point warmer or colder until the desired temperature is reached. When adjustment is complete stop touching the display and the set point will be saved in approximately five seconds.

4. **VIEWING ACTUAL TEMPERATURE**

   In viewing temperature in these modes any offsets are taken into account. This means that if you place a thermistor in a known temperature, let's say ice water, it may not read the 32°F that you would assume. If the control offset was preset at -3°F while you placed the thermistor in an icebath, the actual thermistor reading when viewing actual temperature would read 35°F. In the unit this would cause the cabinet to push itself 3° cooler. To view pure thermistor readings you must go into the service menu and choose the correct option. To view the thermistor temperature, push and release the up and down keys. The display will show the corrected refrigerator temperature.

5. **CHANGING FROM FAHRENHEIT TO CELSIUS**

   To change the displayed temperature from °F to °C, push and hold the up and down arrows for 5 seconds. Repeat to change back.

6. **SHOWROOM MODE**

   This mode is designed to show units in a display environment. When in this mode the only functions will be the control and cabinet lights. The compressor, fans, etc. will not operate. To enter this mode hold the light key and the power key for 5 seconds. The display will flash once and beep and the degree symbol will begin to flash. When the degree symbol is flashing the unit will allow the use of the control for demonstrations. The unit can be left in this mode indefinitely. To exit this mode, interrupt power to the unit.

7. **SERVICE MODE**

   This mode has 28 different options available for service diagnostics. To enter the mode hold the hidden key for 10 seconds. The display will show "0." When in this mode use the up and down arrows to select the desired option. The LIGHT key is the ENTER key and will enter a function. If changing a setting, you must press the LIGHT key again to retain the changed setting. To exit the service mode scroll to option "0" and press the LIGHT key. After five minutes of not touching any keys the mode will also exit automatically.

Service Mode Quick Guide

Number	Service Mode Menu Item	To Navigate / Access
1	View thermistor #1 cabinet temp no offsets	Use up/down to access and light bulb key to view
2	View thermistor #2 evaporator no offsets	Does not apply to this model
3	View thermistor #3 freezer no offsets	Does not apply to this model
4	View thermistor #4 ice maker no offsets	Does not apply to this model
5	Adjust thermistor #1 offset	Call tech line for assistance 800 779 2547
6	Adjust thermistor #2 offset	Does not apply to this model
7	Adjust thermistor #3 offset	Does not apply to this model
8	Adjust thermistor #4 offset	Does not apply to this model
9	View thermistor #2 set point no offsets	Does not apply to this model
10	View thermistor #3 set point no offsets	Does not apply to this model
11	View thermistor #4 set point no offsets	Does not apply to this model
12	Adjust defrost interval 3 to 12 hours	Up/down to select, light icon to enter and save change
13	Adjust defrost duration 0 to 99 minutes	Up/down to select, light icon to enter and save change
14	Display error log	Use up/down to access and light bulb key to view
15	Clear error log	Use up/down to access and light bulb key to clear
16	View thermistor #1 differential	Do not make any changes to this
17	Fan on delay (start of cooling cycle)	Up/down to select, light icon to enter and save change
18	Fan off delay (after cooling cycle stops)	Up/down to select, light icon to enter and save change
19	Component testing (see service mode)	Use up/down to access, light bulb icon to toggle on/off
20	Display programmed model number	Use up/down to access, light bulb icon to display
21	Light all LED segments of display (test)	Use up/down to access and light bulb key to view
22	Display defrost cycles in last 24 hours	Use up/down to access and light bulb key to view
23	Displays last/current compressor run time	Use up/down to access and light bulb key to view
24	Activate harvest cycle	Does not apply to this model
25	Restore factory defaults	Use up/down to access and light bulb key to restore
26	Display control board software version	Use up/down to access and light bulb key to view
27	Display user interface software version	Use up/down to access and light bulb key to view
28	Monitor unit function through laptop/PC	Call tech line for assistance 800 779 2547
0	To exit service mode	Use up/down to scroll and light bulb icon to exit

Service Mode Quick Guide

1. **THERMISTOR 1 — TEMPERATURE**
   This will show the pure thermistor reading with no offsets taken into account. When placed in ice water this thermistor should read 32°F in this menu option.

2. Does not apply to this model.

3. Does not apply to this model.

4. Does not apply to this model.

5. **ADJUST THERMISTOR 1 OFFSET**
   This calibration is only to be used if actual temperature at thermistor #1 is off from set point.

   By adjusting the offset higher we can force the unit to drive the temperature down below the set point. (example: adjusting from 0 to +2 will drop the unit temperature 2 degrees)

   DO NOT MAKE AN ADJUSTMENT TO THIS WITHOUT CONTACTING TECH LINE.

6. Does not apply to this model.

7. Does not apply to this model.

8. Does not apply to this model.

9. Does not apply to this model.

10. Does not apply to this model.

11. Does not apply to this model.

12. **DEFROST INTERVAL ADJUST — 3 TO 24 HOURS**
    This will adjust the interval between defrosts from 3 to 24 hours. Adjusting from the factory settings may cause undesired temperature in the refrigerator section.

13. **DEFROST LENGTH ADJUSTMENT — UP TO 99 MINUTES**
    The length of the defrost can be adjusted up to 99 minutes long. The other defrost parameters still apply. Lengthening a defrost may cause higher than normal temperatures in the refrigerator section.

14. **ERROR LOG**
    A list of the errors in the order they occurred will scroll once on the display. Repeat if desired. Once viewed, perform option 15, to clear the errors from memory.

15. **CLEAR ERROR LOG**
    Perform this operation after checking the errors.

16. **ADJUST THERMISTOR 1 DIFFERENTIAL**
    This number should not be adjusted.

17. **FAN DELAY ON=**
    “Fan Delay On” is the amount of time in minutes the fan will be delayed from starting from the beginning of a cooling cycle.

18. **FAN DELAY OFF=**
    “Fan Delay Off” is the amount of time in minutes the fan will continue to run at the end of a cooling cycle.

19. **INDIVIDUAL COMPONENT TOGGLE**

Relay #2....

Relay #3. Will start the ice maker module and forward it through a full harvest cycle

Relay #4. Will send voltage to the water valve.

Relay #5. Will send voltage to the hot gas valve, where applicable.

Relay #6. Will send voltage to the 120 volt condenser fan (clr ice only).

Relay #7. Will send voltage to the compressor.

DC OUTPUT #1. Will energize the light circuit.

DC OUTPUT #2. Will energize the evaporator fan circuit, where applicable.

DC OUTPUT #3. Will energize the condenser fan circuit (all but CLR ice).

DC OUTPUT #4. Secondary cabinet light, where applicable.

20. **MODEL NUMBER DISPLAYED**

Displays the two-digit model number of the specific unit.

21. **LIGHT ALL LED SEGMENTS**

This will illuminate all the LEDs on the display to ensure they work properly.

22. **DEFROST INFORMATION**

Displays the number of defrosts that have occurred in the past 24 hours.

23. **COMPRESSOR RUNTIME BASED ON LAST CYCLE**

This will show the number of minutes the compressor has run in the prior cycle (or current cycle if the compressor was running when service mode was entered).

24. **ACTIVATE DEFROST**

Turns on the hot gas bypass valve allowing hot gas to circulate through the evaporator causing frost to melt.

25. **RESTORE FACTORY DEFAULTS**

Will restore all adjustable functions to their factory settings.

26. **MAIN SOFTWARE**

Displays software version of the main control board.

27. **USER INTERFACE SOFTWARE**

Displays the software version of the user interface.

28. **LIVE LOG PERIOD**

Can be utilized with a laptop or PC to display control functions while unit is running.

ERRORS

*All errors are logged in memory.

*Only door error is displayed on the display and has an audible signal.

*For 68118 models, pump error is displayed via alert light with no audible alerts.

E1: Thermistor 1 open.

E2: Thermistor 2 open (Does not apply to this model).

E3: Thermistor 3 open (Does not apply to this model).

E4: Thermistor 4 open (Does not apply to this model).

E5: Thermistor 1 shorted.

E6: Thermistor 2 shorted (Does not apply to this model).

E7: Thermistor 3 shorted (Does not apply to this model).

E8: Thermistor 4 shorted (Does not apply to this model).

E9: Door open error.

Pi: Pump Circuit open (Does not apply to this model).

Thermistors

Thermistors are used for various temperature readings. Thermistors provide reliable temperature readings using a resistance which varies based on surrounding temperatures. If a faulty thermistor is suspected it may be tested using an accurate ohmmeter.

THERMISTOR FAILURE

Zone Thermistors

If the zone thermistor in the unit fails the unit will continue to cool in a back up mode to preserve the integrity of the contents. The unit will cycle on for ten minutes, then shut down for forty five minutes. The process will repeat until the problem is corrected. All other functions of the unit will continue to operate normally

Evaporator Thermistors

If an evaporator thermistor fails the unit will rely on a preset defrost timer during defrost cycles. The unit will otherwise operate normally. The error will be displayed in the service mode “Error Log.”

This unit has two thermistors. Thermistor one is located along the right hand side wall inside of the unit and is used to maintain temperature within the unit.

Thermistor two is located on the back of the evaporator and is used for defrost purposes.

Thermistor connections must be kept clean. A thermistor connection that has become corroded can cause resistance values from the thermistor to change as they pass through a dirty connection to the board.

It is for that reason that we apply die electric grease to all of our thermistor connections. Die electric grease will help to keep thermistor connections clean and dry.

If you change a thermistor in the unit please re-apply die electric grease to the connection. If you encounter a dirty thermistor connection, you should replace the thermistor and the thermistor harness.

Thermistor Resistance Data

Temp (F)	Temp (C)	Nominal Resistance (OHMS)*
-40	-40	169157
-31	-35	121795
-22	-30	88766
-13	-25	65333
-4	-20	48614
5	-15	36503
14	-10	27681
23	-5	21166
32	0	16330
41	5	12696
50	10	9951
59	15	7855
68	20	6246
77	25	5000
86	30	4029
95	35	3266
104	40	2665
113	45	2186
122	50	1803
131	55	1495
140	60	1247
149	65	1044
158	70	879
167	75	743
176	80	631

* (=/-5%)

Defrost

These units are automatic (cycle) defrost unit will defrost itself when the control/sensor is satisfied of internal temperatures. Defrost mode ends when control/sensor asks for cooling.

Remove Fan and Cover

CONVECTION COOLING

This unit is equipped with an advanced convection cooling system. Convection cooling stabilizes cabinet temperature, cools product faster and increases energy efficiency.

Evaporator Fan

The evaporator fan is responsible for circulating warm air from the refrigeration zone, past the evaporator and back into the refrigerated zone.

The evaporator fan is factory set to have a 1 minute delay at the beginning of a cooling cycle. This delay gives the evaporator time to cool properly before warm air is passed over it. The fan will continue to run for an additional 2 minutes at the end of a cooling cycle. Fan delay times can be modified through the service menu.

Evaporator fan operation is also determined by door switch state. If the door switch circuit opens, the fan will stop. When the door switch circuit is closed the fan will either continue running with the cooling cycle, or if not currently cooling, the fan will run for 1 minute to circulate air and clear any condensation that may have appeared on glass doors and shelves.

Note: If the unit is set to sabbath mode, the evaporator fan will no longer respond to the state of the door switch.

In order to operate efficiently, the evaporator fan blade and vents should be unobstructed and free of any dust buildup.

The 3060 is a dual zone unit made up of two independently controlled cooling zones. The 3060 can contain wine captains, beverage centers and refrigerators, either paired together or any combination there of.

Evaporator Fan Replacement

Should an evaporator fan need to be replaced follow the steps below.

1. Remove any product from the unit.
2. Uninstall unit.
3. Disconnect power to the unit.
4. Remove the rear panel from unit.
5. Disconnect fan electrical connection to the fan which must be changed.
6. Remove insulating foam from refrigerant line pass-through hole as needed to gain clearance for the fan plug.
7. Remove shelf clips.
8. Remove internal shelving.
9. Remove thermistor cover.
10. Remove two evaporator cover screws from top of evaporator cover and two from the bottom.

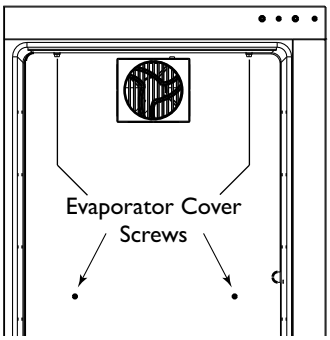

11. While pulling the evaporator cover clear of the unit, it may be necessary to use your free hand to manipulate the fan plug end through the pass-through hole.

12. Remove the 4 screws mounting the fan shroud to the evaporator plate.

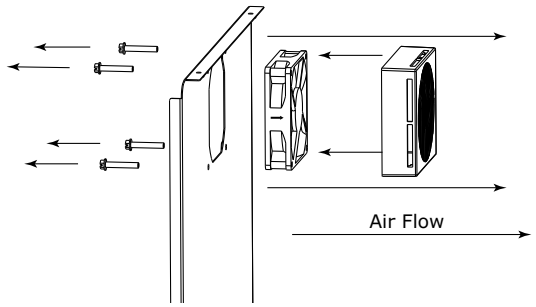

13. Remove and replace fan. Take special care to properly route fan wire.

NOTICE

Fan must be oriented to pull air in through lower evaporator cover vents and push air out at fan mounting location.

14. Installation is the reverse of removal.

15. Use sealant gum to seal any holes in the rear of the unit before replacing the rear cover.

16. Reinstall the unit taking care to level, center and secure as you found it.

U-Line Corporation (U-Line) Limited Warranty

One Year Limited Warranty

For one year from the date of original purchase, this warranty covers all parts and labor to repair or replace any part of the product that proves to be defective in materials or workmanship. For products installed and used for normal residential use, material cosmetic defects are included in this warranty, with coverage limited to 60 days from the date of original purchase. All service provided by U-Line under the above warranty must be performed by a U-Line factory authorized servicer, unless otherwise specified by U-Line. Service provided during normal business hours.

Two Year Limited Warranty (5 Class Product)

For two years from the date of original purchase, this warranty covers all parts and labor to repair or replace any part of the product that proves to be defective in materials or workmanship. For products installed and used for normal residential use, material cosmetic defects are included in this warranty, with coverage limited to 60 days from the date of original purchase. All service provided by U-Line under the above warranty must be performed by a U-Line factory authorized servicer, unless otherwise specified by U-Line. Service provided during normal business hours.

Available Second & Third Year Limited Warranty

In addition to the standard one and two year warranties outlined above, U-Line offers a one year extension of the warranties from the date of purchase, free of charge. To take advantage of this extension, you must register your product with U-Line within 60 days from the date of purchase at u-line.com and provide proof of purchase.

Five Year Sealed System Limited Warranty

For five years from the date of original purchase, U-Line will repair or replace the following parts, labor not included, that prove to be defective in materials or workmanship: compressor, condenser, evaporator, drier, and all connecting tubing. All service provided by U-Line under the above warranty must be performed by a U-Line factory authorized servicer, unless otherwise specified by U-Line. Service provided during normal business hours.

Terms

These warranties apply only to products installed in any one of the fifty states of the United States, the District of Columbia, or the ten provinces of Canada. The warranties do not cover any parts or labor to correct any defect caused by negligence, accident or improper use, maintenance, installation, service, repair, acts of God, fire, flood or other natural disasters. The product must be installed, operated, and maintained in accordance with your product's User Guide.

The remedies described above for each warranty are the only ones that U-Line will provide, either under these warranties or under any warranty arising by operation of law. U-Line will not be responsible for any consequential or incidental damages arising from the breach of these warranties or any other warranty, whether express, implied, or statutory. Some states do not allow the exclusion or limitation of incidental or consequential damages, so the above limitation or exclusion may not apply to you. These warranties give you specific legal rights, and you may also have other rights which vary from state to state.

Any warranty that may be implied in connection with your purchase or use of the product, including any warranty of *merchantability* or any warranty *fit for a particular purpose* is limited to the duration of these warranties, and only extends to five years in duration for the parts described in the section related to the five year limited warranty above. Some states do not allow limitations on how long an implied warranty lasts, so the above limitations may not apply to you.

- The warranties only apply to the original purchaser and are non-transferable.
- The second, third, and five year warranties cover products installed and used for normal residential or designated marine use only.
- The warranties apply to units operated outside only if designed for outdoor use by model and serial number.
- U-Line Commercial products are covered by the one year and 5 year limited warranties and are not eligible for the second and third year limited warranties.
- Replacement water filters, light bulbs, and other consumable parts are not covered by these warranties.
- The start of U-Line's obligation is limited to four years after the shipment date from U-Line.
- In-home instruction on how to use your product is not covered by these warranties.
- Food, beverage, and medicine loss are not covered by these warranties.
- If the product is located in an area where U-Line factory authorized service is not available, you may be responsible for a trip charge or you may be required to bring the product to a U-Line factory authorized service location at your own cost and expense.
- Units purchased after use as floor displays, and/or certified reconditioned units, are covered by the limited one year warranty only and no coverage is provided for cosmetic defects.
- Signal issues related to Wi-Fi connectivity are not covered by these warranties.

For parts and service assistance, or to find U-Line factory authorized service near you, contact U-Line:
8900 N. 55th Street, Milwaukee, WI 53223 • u-line.com • onlineservice@u-line.com • +1.414.354.0300

Copyright U-Line Corporation. All Rights Reserved. | Publication Number 30379 | 3/2024 Rev. Q