WHYNTER Compressor Cooling Built-in Dual Temperature Zone Wine Refrigerator

MODEL# : BWR-281DZ / BWR-461DZ

Instruction Manual

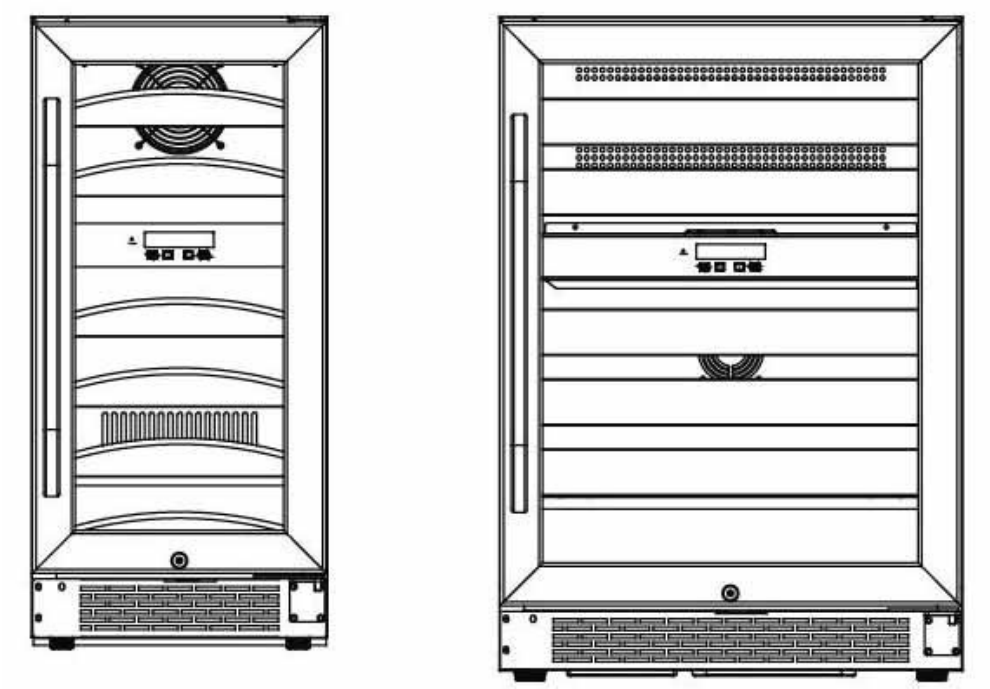

Thank you for your purchase of this WHYNTER product. Please read this Instruction Manual carefully before using product to ensure proper use. Keep this manual in a safe place for future reference.

TABLE OF CONTENTS

Appliance Safety	3
Important Safeguides	3-4
Parts and Features	5
Important Safety Instructions	6
Installation Instructions	6
Before Using Your Appliance	6
Installation of Your Appliance	6
Built-in Cabinet Instructions	7
Electrical Connection	7
Extension Cord	7
Reversing the Door Swing of Your Appliance	8
Installing Stainless Steel Handle	9
Operating Your Appliance	9
Recommended Temperature Settings	9
Controls	9-10
Storage	11
Door Lock	11
Wine Shelves	12
Care and Maintenance	13
Cleaning Your Appliance	13
Power Failure	13
Vacation Time	13
Moving Your Appliance	13
Energy Saving Tips	13
Troubleshooting Guide	14
Warranty Information	15

APPLIANCE SAFETY

Your safety and the safety of others are very important to us.

To reduce the risk of fire, electrical shock, or injury when using your appliance, follow these basic precautions



This is the Safety Alert Symbol. This symbol alerts you to potential hazards that may result in serious injury. All safety messages will follow the Safety Alert Symbol and either the words" DANGER" or "WARNING".

⚠ DANGER ⚠

Danger means that failure to heed this safety statement may result in severe injury or death.

⚠ WARNING ⚠

Warning means that failure to heed this safety statement may result in extensive product damage, serious injury, or death.

CAUTION

Caution means that failure to heed this safety statement may result in minor or moderate injury, or property or equipment damage.

All safety messages will alert you to know what the potential hazard is, tell you how to reduce the chance of injury, and let you know what can happen if the instructions are not followed.

IMPORTANT SAFEGUIDES



Before the appliance is used, it must be properly positioned and installed as described in this manual, please read the manual carefully. To reduce the risk of fire, electrical shock or injury when using the appliance, follow basic precaution, including the following:

⚠ DANGER ⚠

- Plug into a grounded 3-prong outlet, do not remove grounding prong, do not use an adapter, and do not use an extension cord.
- Do not use if the power supply cord is damaged. If damaged, it must be replaced by a qualified electrician.
- It is recommended that a separate circuit, serving only your appliance be provided. Use receptacles that cannot be turned off by a switch or pull chain.
- Never clean appliance parts with flammable fluids or harsh chemicals. These fumes can create a fire hazard or explosion.

- Do not store or use gasoline or other flammable vapors and liquids in the vicinity of the appliance or any other appliance.
- Before proceeding with cleaning and maintenance operations, make sure to unplug the appliance.
- Do not connect or disconnect the electric plug with wet hands.
- Do not attempt to repair or replace any part of your appliance unless it is specifically recommended in this manual. All other servicing should be referred to a qualified technician.

⚠ WARNING ⚠

FOLLOW WARNING CALL OUTS BELOW ONLY WHEN APPLICABLE TO YOUR MODEL

- Use two or more people to move and install the appliance. Failure to do so can result in injury.
- To ensure proper ventilation for your appliance, the front of the appliance must be completely unobstructed. Choose a well-ventilated area with temperatures above 60°F (16°C) and below 90°F (32°C). This appliance must be installed in an area protected from the element, such as wind, rain, water spray or drips.
- The appliance should not be located next to ovens, grills or other sources of high heat.
- The appliance must be installed with all electrical, water and drain connections in accordance with state and local codes.
- The fuse (or circuit breaker) size should be 15 amperes.
- It is important for the appliance to be leveled in order to work properly. For a stable installation, make sure the appliance is placed on a flat, level and solid surface.
- Ensure that the surface on which the appliance is placed is strong enough to hold the appliance and the items stored inside.
- This appliance is not intended for use by young children or physically-challenged persons without supervision/assistance. Young children must be supervised to ensure safety around this or any appliance.
- Do not use solvent-based cleaning agents of abrasives on the interior. These cleaners may damage or discolor the interior.
- Keep fingers out of the “pinch point” areas. Clearance between the doors and between the doors and cabinet are necessarily small. Be carefully closing doors when children are in the area.
- This wine refrigerator is designed to store wine bottles. If food is stored inside, ensure that there is sufficient airflow between items. Please note that the temperature range for this cooler is optimized for wine and beverage storage. Perishable food items may require a different storage environment.
- Do not place hot food or beverages into the appliance.
- Close the cooler door immediately after putting in any items to keep the internal temperature relatively constant.
- Avoid placing any objects on top of the appliance.
- The appliance is an electrical appliance. To avoid injury from electrical shock do not operate the Appliance with wet hands, while standing on a wet surface or while standing in water. Do not use outdoors or in wet conditions.
- When positioning or moving the appliance ensure that it is not turned up side down or greater than 45° or more off level.
- Never pull the cord to disconnect it from the outlet. Grasp the plug and pull it from the outlet.
- Never lift, carry or drag the appliance by the power cord.
- This appliance is designed for household, non-commercial use only. Any other use will void the warranty.
- Do not plug into the power outlet before set up is completed.
- Do not move this appliance without emptying it and securing the door in a closed position.

PARTS & FEATURES

Model BWR-281DZ

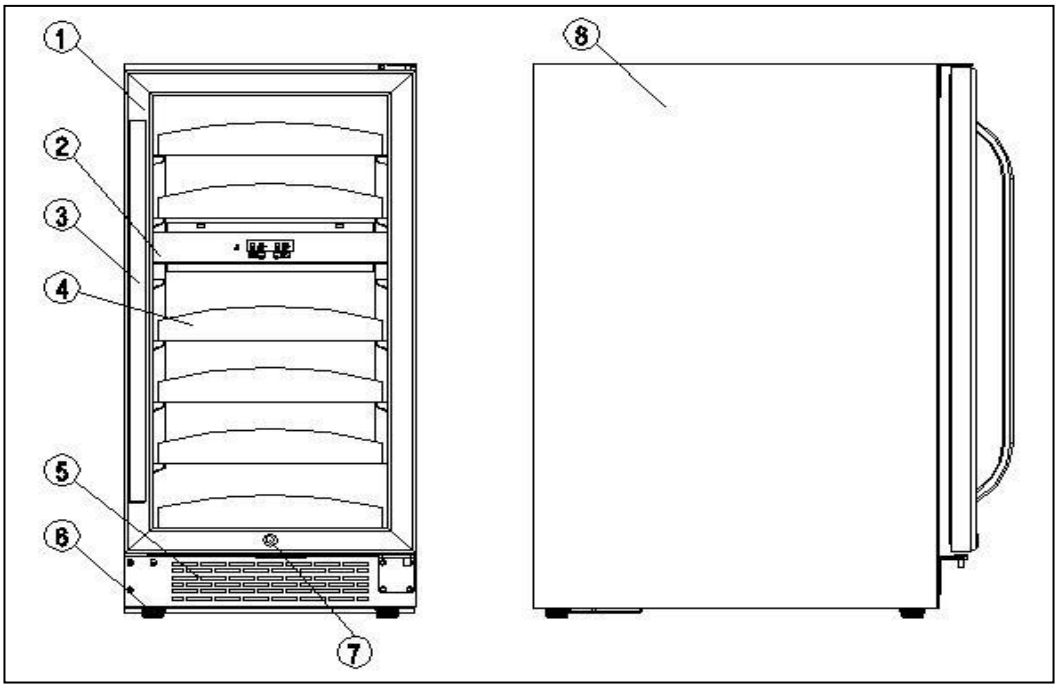

Model BWR-461DZ

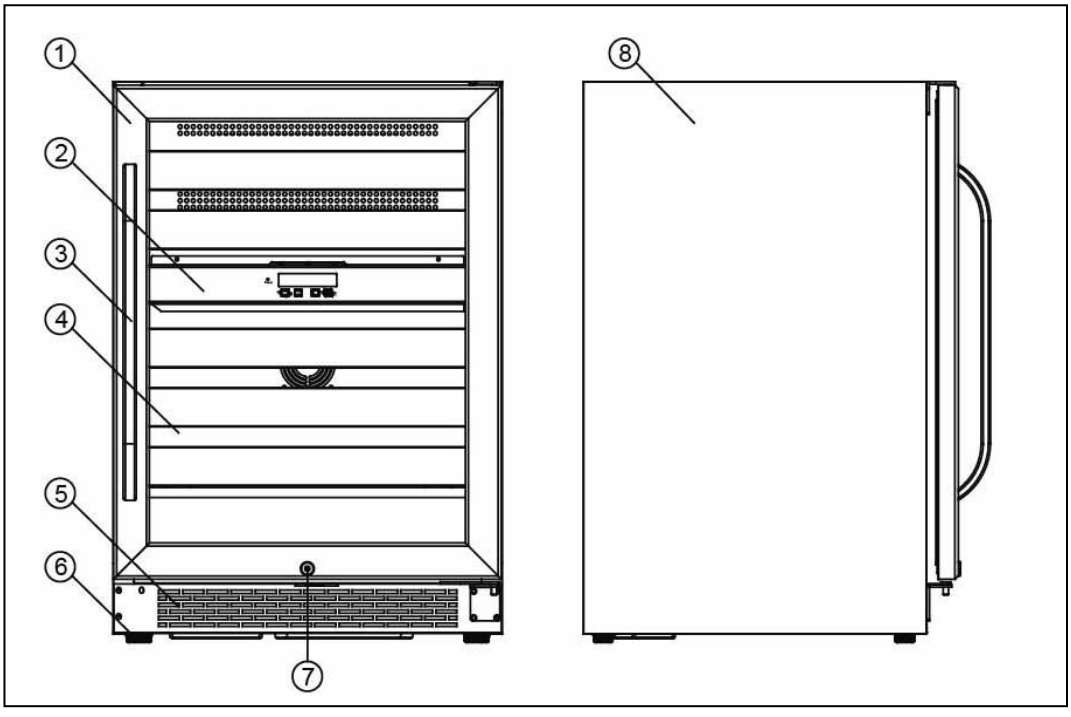

1. **DOOR**
2. **CONTROL PANEL**
3. **STAINLESS STEEL HANDLE**
4. **SHELVES**
5. **BOTTOM GRILLE**
6. **LEVELING LEGS**
7. **SECURITY LOCK**
8. **CABINET**

IMPORTANT SAFETY INSTRUCTIONS

WARNING	To reduce the risk of fire, electrical shock, or injury when using your appliance, follow these basic precautions:

- Read all instructions before using the appliance.
  - **DANGER or WARNING:** An empty cooler can be a hazardous for children or small pets. If disposing of the cooler, remove gasket seals, latches, lids or the entire door from your unused appliance, or take other action to ensure the cooler is harmless.
- Never allow children to operate, play with, or crawl inside the appliance.
- Never clean appliance parts with flammable fluids or harsh chemicals. The fumes can create a fire hazard or explosion.
- Do not store or use gasoline or any other flammable vapors and liquids in the vicinity of this or any other appliance. The fumes can create a fire hazard or explosion.

INSTALLATION INSTRUCTIONS

➢ **BEFORE USING YOUR APPLIANCE**

- Remove the exterior and interior packing.
- Before connecting the appliance to the power source, let it stand upright for approximately 2 hours. This will reduce the possibility of a malfunction in the cooling system from handling during transportation.
- Clean the interior surface with lukewarm water using a soft cloth.
- Install the handle on the door.

➢ **INSTALLATION OF YOUR APPLIANCE**

- The appliances are designed to be for built-in or recessed or free standing installation.
- **WARNING**: Do not store or install the appliance outdoors.
- **CAUTION:** This appliance is designed for storing and cooling wines. Do not store perishable food, medicine or other medical products.
- Place your appliance on a hard and level floor that is strong enough to support it when it is fully loaded.
- We do not recommend installing the appliance on carpet.
- To level your appliance, adjust the leveling legs at the bottom of the appliance if needed.
- For free standing installation, 5 inches (127mm) of space between the back and sides of the appliance are suggested, which allows the proper air circulation to cool the compressor and condenser. Even for built-in installation, it is a must to keep a ¼" (6.35mm) space on each side and at the top. And the air vent at the front of the appliance must never be covered or blocked in any way.
- NOTE: Do NOT install the appliance near an oven or other heating source. Direct sunlight may affect the acrylic coating and heat sources may increase electrical consumption. For best performance, do not install the appliance behind a cabinet door or block the base grille.
- Avoid locating the appliance in area that may be exposed to excessive moisture.
- Plug in the appliance into an exclusive, grounded wall power outlet. Do not under any circumstances cut or remove the third (ground) prong from the power cord. Any questions concerning power and/or grounding should be directed toward a qualified electrician or an authorized service center.

➢ BUILT-IN CABINET INSTRUCTIONS

These appliances are designed for both built-in or free standing installation.
For built-in installation, ensure proper service access and ventilation, allow at least 2/5" clearance at the back, 1/5" at top and 1/5" at sides.

Cabinet Opening Dimensions (min.)		
	BWR-281DZ	BWR-461DZ
Width	15.4" / 39.1 cm	23.9" / 60.7 cm
Depth	23.9" + 2" handle / 60.7 + 5.1 cm	23.9" + 2" handle / 60.7 + 5.1 cm
Height	32.2" / 81.8 cm	34.2" / 86.9 cm

➢ ELECTRICAL CONNECTION

WARNING

Improper use of the grounded plug can result in the risk of electrical shock. If the power cord is damaged, have it replaced by a qualified electrician or an authorized service center.

This appliance requires a standard 115/120 Volt AC ~/60Hz electrical ground outlet with three-prong. Have the wall outlet and circuit checked by a qualified electrician to make sure the outlet is properly grounded. The cord should be secured behind the appliance and not left exposed or dangling to prevent accidental injury.

The appliance should always be plugged into its own individual electrical outlet which has a voltage rating that matches the rating label on the appliance. This provides the best performance and also prevent overloading house wiring circuits that could cause a fire hazard from overheated. Never unplug the appliance by pulling the power cord. Always grip the plug firmly and pull straight out from the receptacle. Repair or replace immediately all power cords that have become frayed or otherwise damaged. Do not use a cord that shows cracks or abrasion damage along its length or at either end. When moving the appliance, be careful not to damage the power cord.

➢ EXTENSION CORD

Because of potential safety hazards, it is strongly recommended that you do not use an extension cord with this appliance. However, if you must use an extension cord it is absolutely necessary that it be a UL/CUL-Listed, 3-wire grounding type appliance extension cord having a grounding type plug and outlet and that the electrical rating of the cord be 115 volts and at least 10 amperes.

➢ REVERSING THE DOOR SWING OF YOUR APPLIANCE

This appliance has the capability of the door opening from either the left or right side. The appliance is delivered to you with the door opening from the left side. Should you desire to reverse the opening direction, please follow the following reversal instructions.

Note: All parts removed must be saved for proper reinstallation of the door.

1. Open the glass door and remove the lower right hinge. Be careful to support the glass door firmly to prevent it dropping after removing the screws. (Figure 1)
2. Pull down to remove the glass door and place it on a padded surface to prevent scratching it. (Figure 2)

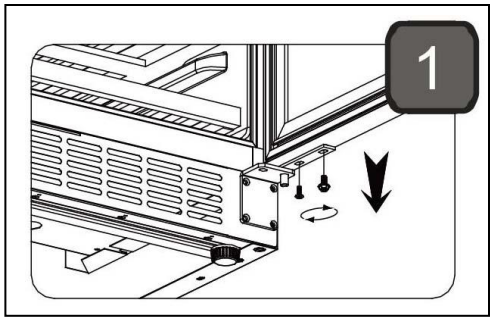

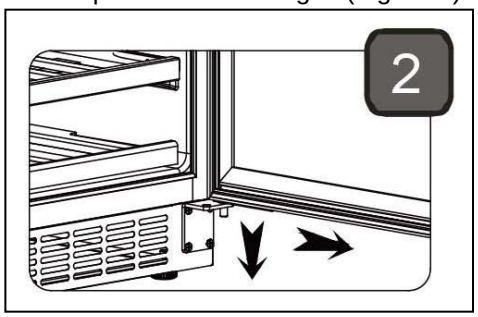

3. Remove the screws from the top right hinge and keep the hinge in a safe place. (Figure 3)
   Remove the plastic caps from the upper left hinge corner and place them to the holes of the upper right hinge.
4. Remove the lower right hinge and bushing. Remove the decorative screws from the left corner and install them to the right corner holes. (Figure 4)

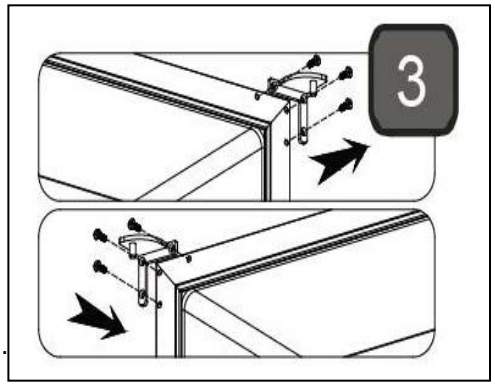

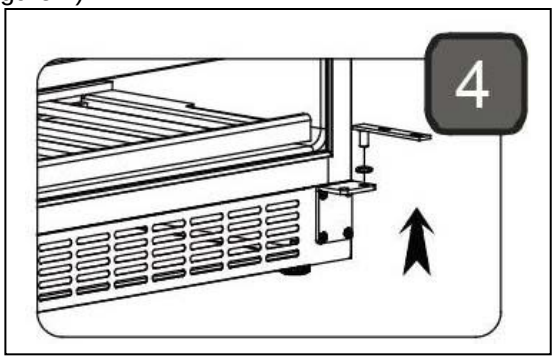

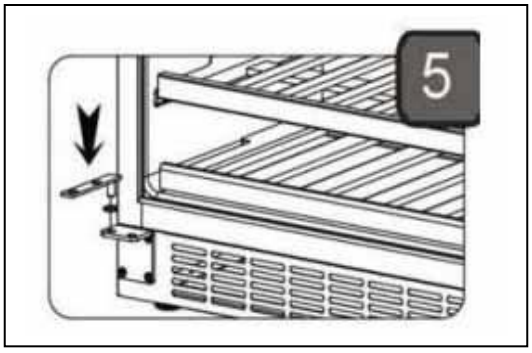

5. Install the lower hinge and bushing on the bottom left support bracket. (Figure 5)
6. Carefully insert the door into the lower left hinge and Install the upper left hinge.(Figure 6)

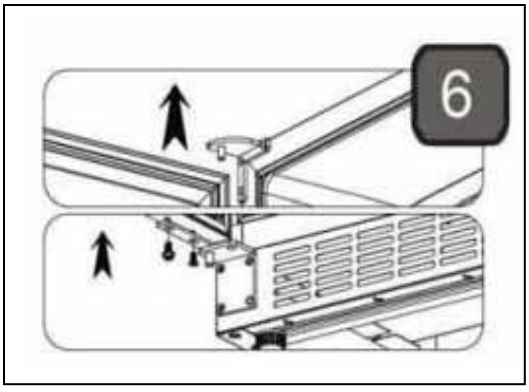

➢ **INSTALLING STAINLESS STEEL HANDLE**

This appliance includes a stainless steel handle that is not required to operate this appliance. To install the handle please follow the below instructions:

1. Remove the door gasket on the side you wish to install the handle. The gasket is easily displaced by hand, no tools are necessary.
2. Use a flat-blade screwdriver remove the two pre-installed decorative plugs from the back of door. Some wine cellar items have no decorative plugs.
3. Install the handle tightly as shown with two screws, lock washers and flat washers provided. (DO NOT over tighten as this will cause damage to the handle and stainless steel door frame).
4. Replace the door gasket to its original position.

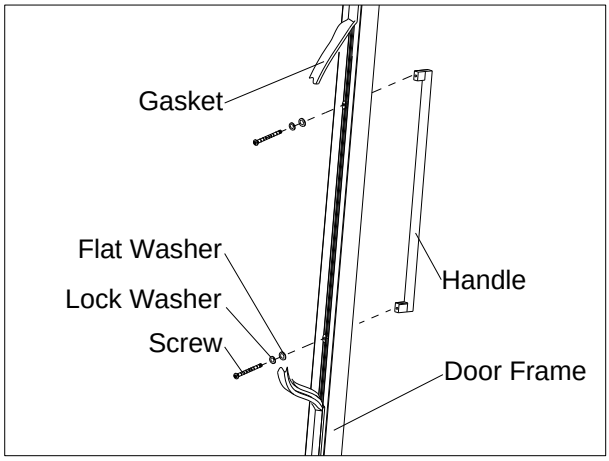

OPERATING YOUR APPLIANCE

It is recommended you install the appliance in a place where the ambient temperature is between 72º-78ºF / 23º-26ºC. If the ambient temperature is above or below recommended temperatures, the performance may be affected. For example, placing your appliance in extreme cold or hot conditions may cause interior temperatures to fluctuate.

➢ **RECOMMENDED TEMPERATURE SETTINGS**

Conservation	10 ~ 14ºC	49 ~ 57ºF
Red Wines	15 ~ 22ºC	58 ~ 72ºF
Dry/White Wines	9 ~ 14ºC	48 ~ 57ºF
Rose Wines	10 ~ 11ºC	49 ~ 51ºF
Sparkling Wines	5 ~ 8ºC	40 ~ 47ºF

- Whether your wine cooler can reach the actual set temperature depends on the ambient environmental conditions, such as temperature and humidity.

➢ **CONTROLS**

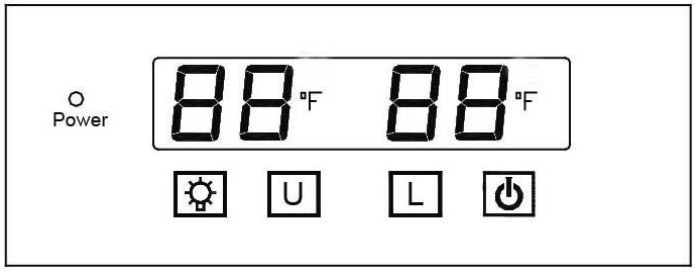

Power light

When the Power indicator is on, there is power to the wine refrigerator.

88

Temperature displays show the actual temperature of the upper and lower zones.

POWER Button ⏻

To turn on/off unit. To turn on/off the unit, touch the ⏻ button and hold 3 seconds.

LIGHT Button

To turn on/off the interior light.

U Button

The U button controls upper zone temperature setting. Press the U button and the temperature setting will decrease by 1ºF / 1ºC of the upper zone. When the temperature setting reaches the lower limit, it will revert back to the highest temperature.
If you want to view the set temperature, press the U button once and the set temperature will flash for 5 seconds on the display.

L Button

The L button controls lower zone temperature setting. Press the L button and the temperature setting will decrease by 1ºF / 1ºC of the lower zone. When the temperature setting reaches the lower limit, it will revert back to the highest temperature.
If you want to view the set temperature, press the L button once and the set temperature will flash for 5 seconds on the display.

This unit can display temperatures in either Celsius or Fahrenheit. To change the temperature unit, press and hold both the U and L buttons simultaneously for approximately 5 seconds.

➢ TEMPERATURE SETTING

BWR-281DZ

- The temperature setting range as below:
  Upper compartment: 54ºF-65ºF / 12ºC- 18ºC
  Lower compartment: 40ºF -54ºF / 5ºC- 12ºC
- The factory preset temperatures are below. The unit will be set to the factory preset temperature after power outage:
  Upper compartment: 12ºC / 54ºF
  Lower compartment: 6ºC / 43 ºF

BWR-461DZ

- The temperature setting range as below:
  Upper compartment: 40ºF -54ºF / 5ºC- 12ºC
  Lower compartment: 54ºF-65ºF / 12ºC- 18ºC
- The factory preset temperatures are below. The unit will be set to the factory preset temperature after power outage:
  Upper compartment: 6ºC / 43 ºF
  Lower compartment: 12ºC / 54ºF

NOTE:

- If the appliance is unplugged, encounter power lost, or turned off, you must wait 3 to 5 minutes before restarting the appliance. If attempted to restart before this time delay, the appliance will not start.
- When the appliance is used for the first time or restarted after having been shut off for a long time, there could be a few degrees variance between the temperature you select and the one indicated on the display. This is normal and it is due to the length of the inactivation time.

➢ STORAGE

Wine bottles may differ in size and dimensions so the actual number of bottles can be stored may vary. The 28 or 46 bottle capacities are approximate maximums when storing traditional Bordeaux 750 ML bottles and includes bulk storage.

BWR-281DZ

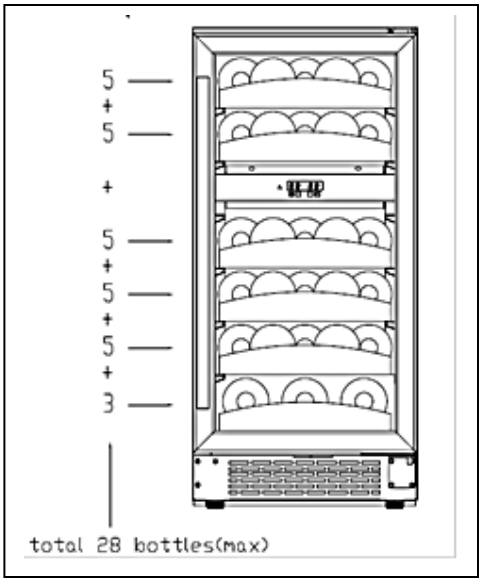

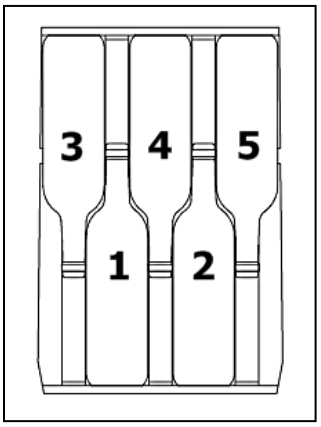

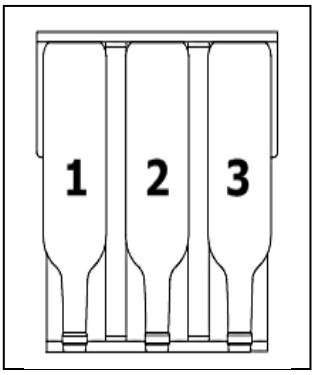

BWR-461DZ

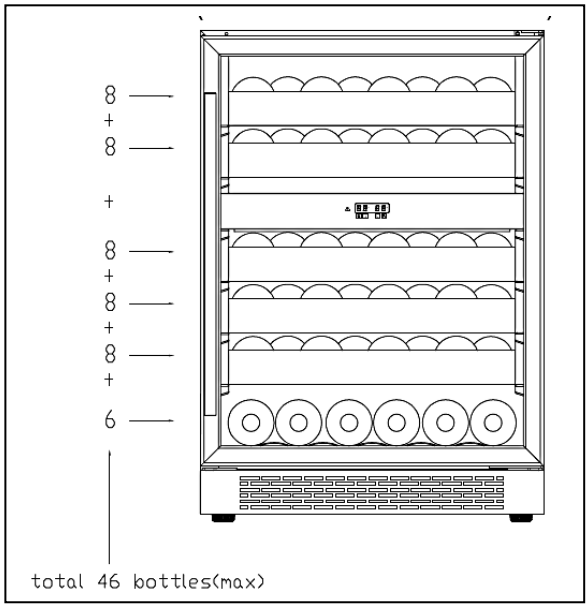

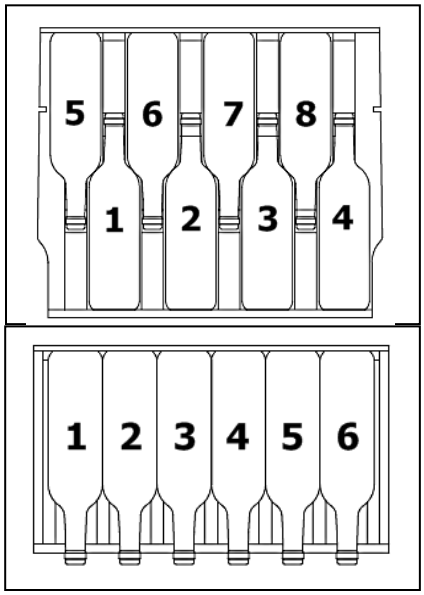

➢ DOOR LOCK

The appliance is provided with a lock and key combination.
The keys are located inside the plastic bag that holds the User Manual. Insert the key into the lock and turn it counterclockwise to unlock the door. To lock the door do the reverse operation making sure metal pin is engaged completely. Remove the key and place it in a secure place.

➢ WINE SHELVES

BWR-281DZ

This appliance is equipped with 6 scalloped wooden shelves. To prevent damage to the door gasket, make sure the door is all the way opened when pulling the shelves out.

- For easy access of the wine bottles, you must pull the shelves approximately ⅓ out of the railing.
- When removing the shelves out of the railing, make sure to remove all items first.
- To remove the shelves, pull the shelf forward until the notch aligns with the plastic post (approximately half way forward) on each side of the shelf track.
  Lift the shelf until both notches pass through the posts.
  Continue to pull the shelf forward until it is completely removed from the inner compartment.

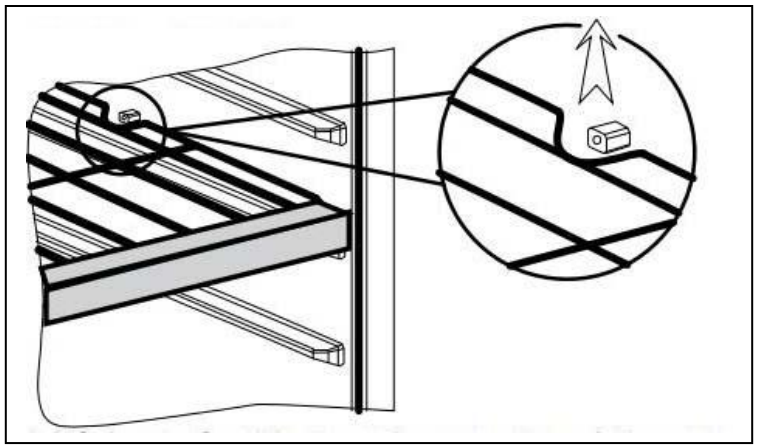

BWR-461DZ

This appliance is equipped with 5 pull-out roller shelves (except for the bottom shelf), which you can move the wooden roller shelves in and out smoothly without worrying about pulling the whole shelf out.

To prevent damage to the door gasket, make sure the door is all the way opened when pulling the shelves out.

- For easy access of the wine bottles, you must pull the shelves approximately ⅓ out of the railing.
- When removing the shelves out of the railing, make sure to remove all items first.
- You may need two persons to remove the shelves. To remove the shelves, pull each shelf approximately 1/3 out. Use a long flat screwdriver to **press down** the right black plastic notch and at the same time **lift up** the left black plastic notch. Then proceed to pull out the shelf slowly. See diagrams below.

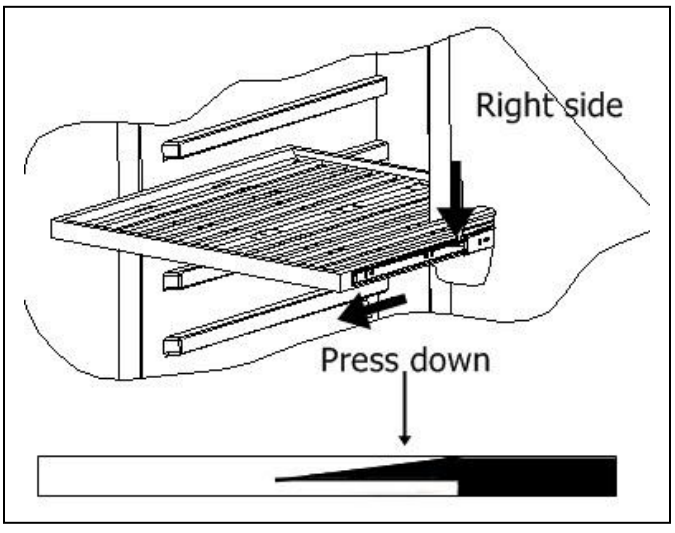

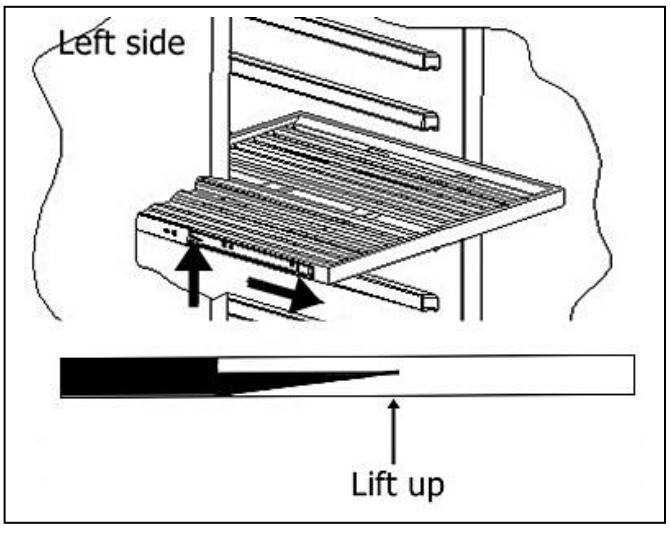

CARE AND MAINTENANCE

- **CLEANING YOUR APPLIANCE**

- Turn off the power, unplug the appliance, and remove all items including shelves.
- Wipe the interior with a warm water and baking soda solution. The solution should be about 2 tablespoons of baking soda to one quart of water.
- Wipe the shelves with a mild detergent solution.
- Wipe the outside cabinet with warm water and mild liquid detergent.
- Do not use steel wool or steel brush on the stainless steel. These will erode the stainless steel and rusting may occur.



CAUTION: Failure to unplug the appliance could result in electrical shock or personal injury.

- **PREMISES POWER FAILURE**

- Most power failures are corrected within a few hours and should not affect the temperature of your appliance if you minimize the number of times the door is opened. If the power is going to be out for an extended period of time, you need to take the proper steps to protect your contents.

- **VACATION TIME**

- **Short vacations:** Leave the appliance operating during vacations of less than two days
- **Long vacations:** If the appliance will not be used for an extended period, remove all items and turn off the appliance. Clean and dry the interior thoroughly.

- **MOVING YOUR APPLIANCE**

- Remove all items inside the appliance.
- Securely tape down (we recommend using painter's tape) all loose items (shelves) inside your appliance.
- Turn the adjustable leg up to the base to avoid damage.
- Tape (we recommend using painter's tape) the door shut.
- Be sure the appliance stays secure in the upright position during transportation and protect the exterior of appliance with a blanket, or similar item.

- **ENERGY SAVING TIPS**

- The appliance should be located in the coolest area of the room, away from heat producing appliances, and out of any direct sunlight.
- Ensure that the appliance is adequately ventilated. Never obstruct the air vents.
- Close the door tightly and do not open the appliance too frequently or for a long period of time.

TROUBLESHOOTING GUIDE

Most common problems can be resolved by referring to the troubleshooting suggestions listed below.

PROBLEM	POSSIBLE CAUSE	SOLUTIONS
The appliance does not operate.	There is a power failure. The appliance is not plugged in. A house fuse has blown or the circuit breaker is tripped.	Ensure the appliance is plugged in and the power outlet has power. Replace the broken fuse or reset the breaker.
The appliance is not cold enough.	The set temperature too high. The appliance is placed too close to a heat source. The door is opened too often. The door is not closed completely. The door gasket does not seal properly. The front bottom grille does not have sufficient ventilation.	Adjust the set temperature Keep the appliance away from sunshine or other heat sources. Close the door tightly and do not open the door too frequently or for a long period of time. Ensure the door gasket is not loose. The front bottom grille must be completely unobstructed.
The appliance turns on and off frequently.	The ambient (room) temperature is too low or high. A large amount of contents has been added to the appliance. The door is opened too often. The door is not closed completely. The door gasket does not seal properly.	Decrease or increase the ambient (room) temperature. To minimize internal temperature fluctuation, do not add large amount of contents at once. Close the door tightly and do not open the door too frequently or for a long period of time. Ensure the door gasket is not loose.
The appliance makes too much noise.	The noise may come from the flow of the refrigerant/ Contraction and expansion of the inside walls may cause popping and crackling noises. The appliance is not level.	It is normal that as each cooling cycle ends, you may hear rattling or gurgling sounds caused by the flow of refrigerant in the appliance. The high efficiency compressor may make a pulsating or high pitched sound. Some popping or cracking noises are normal. They are caused by expansion and contraction of the inside walls due to temperature changes. Make sure the unit is on a hard and level surface. Do not place the appliance on carpet.
The door does not close properly.	The appliance is not level. The door was reversed and not properly installed. The shelves are out of position.	Make sure the cooler is on a hard and level surface. Avoid placing the appliance on a carpeted or soft surface. Correctly install the shelves.

ONE YEAR LIMITED WARRANTY

This WHYNTER Built-in Wine Refrigerator is warranted, to the original owner within the 48 continental states, for one year from the date of purchase against defects in material and workmanship under normal use and service. Should your WHYNTER wine refrigerator prove defective within one year from the date of purchase, return the defective part or unit, freight prepaid (within two months of purchase; after two months to one year, customer will be responsible for freight cost to Whynter's service department), along with an explanation of the claim to Whynter LLC. Please package the wine refrigerator carefully in its original packaging material to avoid damage in transit. Please retain the original box and packaging material. Under this warranty, Whynter will repair or replace any parts found defective. This warranty is not transferable. After the expiration of the warranty, the cost of labor and parts will be the responsibility of the original owner of the unit.

THIS WARRANTY DOES NOT COVER:

- Acts of God, such as fire, flood, hurricanes, earthquakes and tornadoes.
- Damage, accidental or otherwise, to the wine refrigerator while in the possession of a consumer not caused by a defect in material or workmanship;
- Damage caused by consumer misuse, tampering, or failure to follow the care and special handling provisions in the instructions.
- Damage to the finish of the case, or other appearance parts caused by wear.
- Damage caused by repairs or alterations to the product by anyone other than authorized by the manufacturer.
- Freight and Insurance cost for the warranty service.

DISCLAIMER OF IMPLIED WARRANTIES; LIMITATION OF REMEDIES

CUSTOMER'S SOLE AND EXCLUSIVE REMEDY UNDER THIS LIMITED WARRANTY SHALL BE PRODUCT REPAIR OR REPLACEMENT AS PROVIDED HEREIN. CLAIMS BASED ON IMPLIED WARRANTIES, INCLUDING WARRANTIES OF MERCHANTABILITY OR FITNESS FOR A PARTICULAR PURPOSE, ARE LIMITED TO ONE YEAR OR THE SHORTEST PERIOD ALLOWED BY LAW, BUT NOT LESS THAN ONE YEAR. WHYNTER SHALL NOT BE LIABLE FOR CONSEQUENTIAL OR INCIDENTAL DAMAGES SUCH AS PROPERTY DAMAGE AND INCIDENTAL EXPENSES RESULTING FROM ANY BREACH OF THIS WRITTEN LIMITED WARRANTY OR ANY IMPLIED WARRANTY. SOME STATES AND PROVINCES DO NOT ALLOW THE EXCLUSION OR LIMITATION OF INCIDENTAL OR CONSE- QUENTIAL DAMAGES, OR LIMITATIONS ON THE DURATION OF IMPLIED WARRANTIES, SO THESE LIMITATIONS OR EXCLUSIONS MAY NOT APPLY TO YOU. THIS WRITTEN WARRANTY GIVES YOU SPECIFIC LEGAL RIGHTS. YOU MAY ALSO HAVE OTHER RIGHTS THAT VARY FROM STATE TO STATE.

To obtain service or information, contact
Whynter LLC via email at service@whynter.com or call
866-WHYNTER.

Product contents and specifications may change without notice.
Copyright © 2012 Whynter LLC
www.Whynter.com