LIEBHERR

Use and Care Manual

For “NoFrost” Combined Refrigerator-Freezers with IceMaker

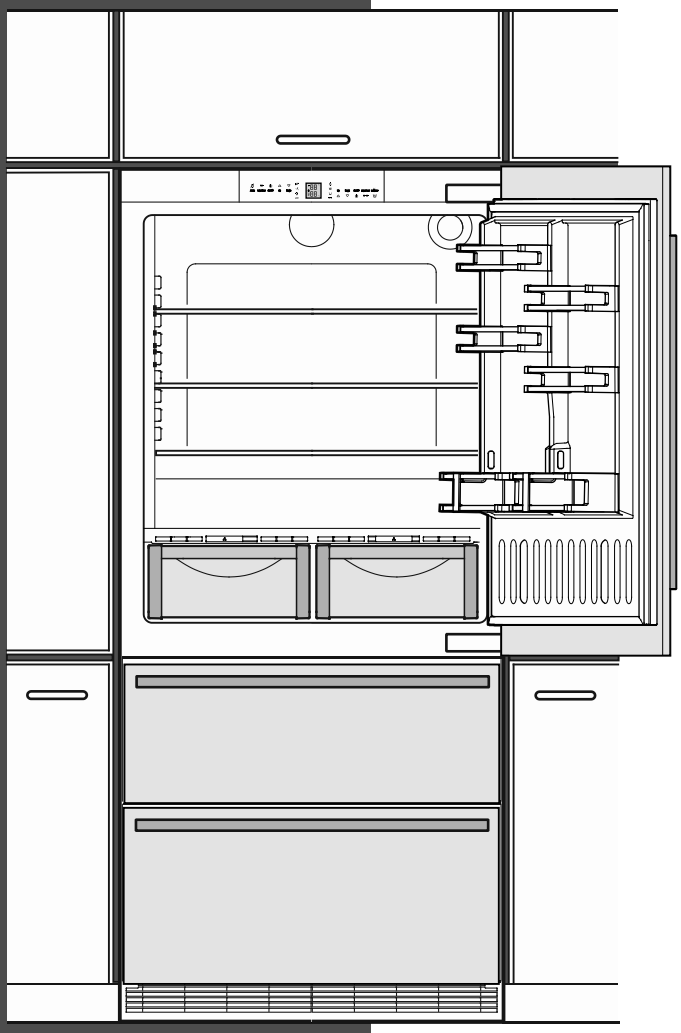

HCB 2090G / HCB 2091G
7083 470-00

V: 01_2025

Table of Contents

Congratulations on your purchase. Choosing this appliance means you want all the benefits of state-of-the-art refrigeration technology, guaranteeing you top quality, a long appliance life span and excellent reliability.

The features on your appliance have been designed to ensure maximum conven-ience - day in, day out.

This appliance has been manufactured with recyclable materials using an environmentally friendly process, so together we're making an active contribution to the preservation of our environment.

To get to know all the benefits of your new appliance, please read the information contained in these operating instructions carefully.

We know you will be pleased with your new appliance.

Additional Benefits

- CFC-free
- Energy-optimized refrigerant circuit
- Energy-efficient insulation
- Low energy consumption
- User-friendly electronic controls
- Display of functions switched on
- Temperature can be controlled within climate rating range, regardless of room temperature
- Refrigerator and freezer compartments defrost automat-ically - no need to spend time defrosting
- Big net refrigerator capacity
- Variable and practical features
- Safety-glass storage shelves
- Big net freezer capacity
- Automatic ice maker
- Water filter for good water quality ice production
- Freezer temperature increase alarm
- Audible door open alarm
- Power failure/"frost-control" display
- Fresh food can be fast-frozen as required
- All drawers suitable for fast freezing
- Integrated transport grips on appliance housing
- Transport castors
- Easy to clean
- This unit is certified as Sabbath compliant by the Star-K organization, thus allowing the appliance to be used during religious holidays. For more information, please visit Star-K on the web at www.star-k.org.

Contents

Page

Please Read and Follow these Instructions 3
California Proposition 65..... 3
Disposal of Old Appliance 3
Disposal of this Appliance 3
Disposal of Packaging Material 4
Important Safety Information 4
R600a Refrigerant..... 6
Electrical Safety 6
Safety Regulations..... 6
Water Filter..... 7
Installing the Water Filter 7
Removing the Water Filter 7
Description of Appliance and Equipment..... 8
Operating and Control Elements 9
Turning the Appliance On and Off 10
Power Failure/Frost-Control Display.....11
Setup Mode.....12
Setup Mode.....14
Arranging Food 16
Shelf Arrangement.....16
Interior Light 17
BioFresh Compartment 18
Storage Times.....19
for food in the BioFresh compartment: 19
Freezer Compartment Description 20
Removing the Freezer Compartment Containers 20
Freezing 21
Freezing with SuperFrost.....21
Freezing and Storage.....21
Safety Instructions and Warnings for the Automatic Ice Maker 22
Turning the Ice Maker On and Off 22
Ice Maker Description 22
Defrosting..... 23
Cleaning..... 23
Cleaning the Air Filter.....24
Vacation Tips 25
Troubleshooting 26
Ice Maker Troubleshooting 27
Appliance Information..... 27

IMPORTANT

All types and models are subject to continuous improvement. The manufacturer reserves the right to make modifications to the shape, equipment, and technology.

Please Read and Follow these Instructions

These instructions contain Danger, Warning, and Caution notes.

This information is important for safe and efficient installation and operation.

Always read and comply with all Danger, Warning, and Caution notes!

⚠ DANGER!

Danger indicates a hazard which will cause serious injury or death if precautions are not followed.

⚠ WARNING!

Warning indicates a potentially hazardous situation which, if not avoided, could result in death or serious injury.

⚠ CAUTION!

Caution indicates a potentially hazardous situation which, if not avoided, may result in minor or moderate injury.

IMPORTANT

This indicates information that is especially relevant to a problem-free installation and operation.

California Proposition 65

- **WARNING:** This product can expose you to chemicals including Diisononyl Phthalate (DINP), which is known to the State of California to cause cancer, and Di-isodecyl Phthalate (DIDP), which is known to the State of California to cause birth defects or other reproductive harm. For more information, go to www.P65Warnings.ca.gov

Disposal of Old Appliance

⚠ WARNING!

Risk of child entrapment.

Child entrapment and suffocation are not problems of the past.

Junked or abandoned refrigerators are still dangerous – even if they will sit for "just a few days."

If you are getting rid of your old refrigerator, please follow these instructions to help prevent accidents.

Before you discard old appliances:

- **Take off the doors.**
- **Leave the shelves in place so that children may not easily climb inside.**
- **Cut off the power cord from the discarded appliance. Discard separately from the appliance.**
- **Be sure to follow your local requirements for disposal of appliances.**

  Contact the trash collection agency in your area for additional information.

Disposal of this Appliance

This appliance contains flammable gases within the refrigeration circuit and insulation foam.

Contact the municipality or disposal company in your area for information on approved recycling or disposal.

	The symbol may be located on the compressor. It refers to the oil in the compressor and refers to the following danger: Can be fatal if swallowed or inhaled. This notice only applies for recycling. There is no danger during normal operation.
	**WARNING:** Risk of fire / flammable materials. The symbol is located on the compressor and indicates the danger from flammable materials. Do not remove the label.
	This label or a similar one can be located on the rear of the appliance. It refers to the foamed-in panels in the door and/or the housing. This notice only applies for recycling. Do not remove the label.

Disposal of Packaging Material

The packaging is designed to protect the appliance and individual components during transport and is made of recyclable materials.

⚠ WARNING!

Keep packaging materials away from children. Polythene sheets and bags can cause suffocation!

If possible, please recycle packaging material at a recycling facility.

Important Safety Information

- **WARNING:** Keep ventilation openings, in the appliance enclosure or in the built-in structure, clear of obstruction.
- **WARNING:** Do not use mechanical devices or other means to accelerate the defrosting process, other than those recommended by the manufacturer.
- **WARNING:** Do not damage the refrigerant circuit.
- **WARNING:** The power cord must not be damaged while installing the appliance.
- **WARNING:** Multi-sockets or distributor strips and other electronic devices (such as halogen transformers) must not be positioned and operated at the rear of appliances.
- **WARNING:** Danger of injury through electric shock! There are live parts under the cover. Only have the interior LED light replaced or repaired by customer service staff or trained personnel.
- **WARNING:** Risk of injury from the LED lamp. The light intensity of the LED light complies with risk group RG 2. If the cover is defective, do not look directly at the light through optical lenses from close distance. This may damage your eyes.
- **WARNING:** This appliance must be secured as described in the Use and Care Manual (Installation Instructions) to rule out any potential risks due to its instability.
- **WARNING:** Do not use electrical appliances inside the food storage compartments of the appliance, unless they are of the type recommended by the manufacturer.

- Any repairs and work on the appliance should only be performed by the customer service department. Unauthorized work may be dangerous to the user. The power source cable should only be changed or replaced by the customer service department. Component parts and power cords shall be replaced with like components performed by factory authorized service personnel only.
- Do not stand on the toe kick, drawers or doors or use them to support anything else.
- This appliance is not intended for use by persons (including children) with reduced physical, sensory or mental capabilities or lack of experience and knowledge unless they have been given initial supervision or instruction concerning use of the appliance by a person responsible for their safety. Children should be supervised to ensure that they do not play with the appliance.
- Do not store explosive substances such as aerosol cans with a flammable propellant in this appliance.
- To prevent injury and damage to property, the appliance should only be installed by four people.
- Check the appliance for signs of damage after unpacking. Contact the supplier if it is damaged. Do not connect the appliance to the mains power supply.
- Avoid prolonged skin contact with cold surfaces (e.g., chilled/frozen products). If necessary, take safety action (e.g., gloves).
- Do not consume food which has been stored for too long; it could cause food poisoning.
- Any repairs and work on the appliance should only be performed by the customer service department or other trained personnel. The same applies to changing the power cord.
- Only perform repair and other work on the appliance when the plug has visibly been disconnected.
- Only install, connect, and dispose of the appliance as described in this Use and Care Manual.
- In the event of a fault, pull out the plug or switch off the fuse.
- When disconnecting the appliance from the power source, pull it out by the plug, never pull on the cable.
- If you have a lockable appliance, do not keep the key near the appliance or within reach of children.
- The appliance is designed for use in enclosed rooms. Do not operate the appliance outdoors or in areas where there is moisture or splashing water.
- Do not use the interior LED light to light the room. The interior LED light is only designed to illuminate the interior of the appliance.
- Do not allow naked flames or ignition sources to enter the appliance.
- Alcoholic drinks or other vessels containing alcohol should be sealed tightly for storage.

SAFETY

R600a Refrigerant

⚠ WARNING!

The refrigerant R600a contained within the appliance is environmentally friendly, but flammable. Leaking refrigerant can ignite.

Electrical Safety

Connect this appliance to a 15 amp or 20 amp, 110-120 VAC, circuit which is grounded and protected by a circuit breaker or fuse.

We recommend using a dedicated circuit for this appliance to prevent circuit overload and the chance of interruption to the appliance.

This appliance is equipped with a three-prong (grounding) polarized plug for your protection against possible shock hazards.

Where a two-prong wall receptacle is encountered, contact a qualified electrician and have it replaced with a properly grounded three-prong receptacle in accordance with all local codes and ordinances.

⚠ WARNING!

Electrocution hazard.

Electrical grounding required.

- **Do not remove the round grounding prong from the plug.**

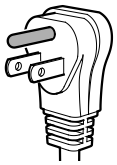

- **Do not use extension cords or ungrounded (two prong) adapters.**
- **Do not use a power cord that is frayed or damaged.**
- **Do not use a power strip.**

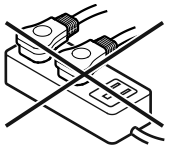

Failure to follow these instructions may result in fire, electrical shock or death.

Safety Regulations

This appliance is intended to be used in household and similar applications.

This includes, for example, use

- in staff kitchenettes, bed and breakfast establishments,
- by guests in cottages, hotels, motels and other forms of accommodation,
- in catering and similar services in the wholesale trade.

IMPORTANT

The appliance is not intended for outdoor use.

The appliance is manufactured to operate within specific ambient temperature limits according to its climate rating.

The climate rating indicates the ambient temperature at which the appliance may be operated in order to achieve full refrigeration performance.

Climate Rating	Ambient Temperature
SN-T	50°F to 109°F (10°C to 43°C)

IMPORTANT

Do not operate the appliance outside the specified ambient temperature range.

- The refrigerant circuit has been tested for leaks.
- The appliance complies with current safety regulations

  CAN/CSA C22.2 No. 60335-2-24 / UL 60335-2-24
  CAN/CSA C22.2 No. 60335-1 / UL 60335-1

We recommend cleaning the appliance before turning it on for the first time. See **„Cleaning“**.

Turn on the appliance several hours before loading it.

⚠ WARNING!

Do not allow children to play with the appliance. Children must not climb, sit or stand on the shelves or door.

Failure to follow these instructions may result in death or serious injury.

Water Filter - Figure 1

Before turning on the appliance install the water filter provided in the interior rear wall of the refrigerator compartment. This ensures good ice cube quality and keeps the water circuit free of solids such as sand.

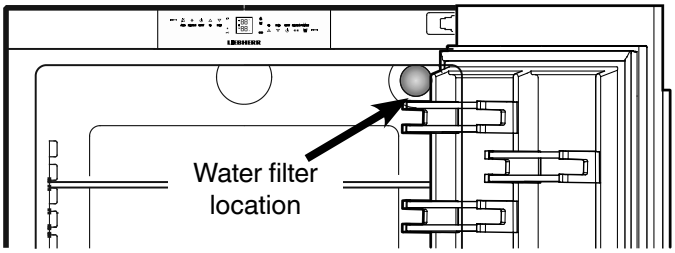

Figure 1

Replace the filter when the drop symbol appears on the temperature display.
Filters can be obtained from your Liebherr Dealer or Distributor.

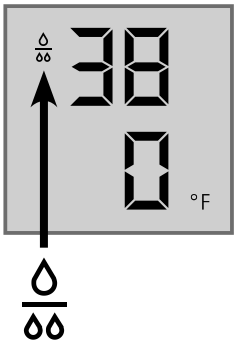

⚠ WARNING!

To avoid the risk of bacteria growth, the water filter must be changed when the waterdrop symbol appears on the display!

IMPORTANT NOTE

It is not necessary to turn off the water supply when removing or installing the water filter.

Installing the Water Filter - Figures 2, 3

1. Remove cover of the filter socket.

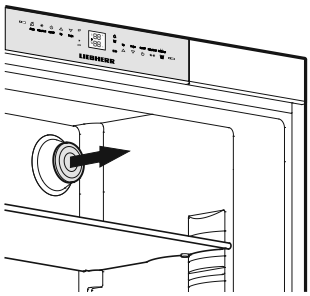

Figure 2

2. Insert the filter and turn it 90° clockwise.

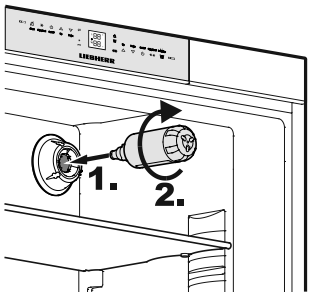

Figure 3

Removing the Water Filter - Figure 4

3. Turn the filter 90° counterclockwise and remove.

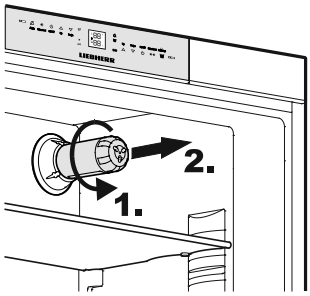

Figure 4

FEATURES

Description of Appliance and Equipment - Figure 5

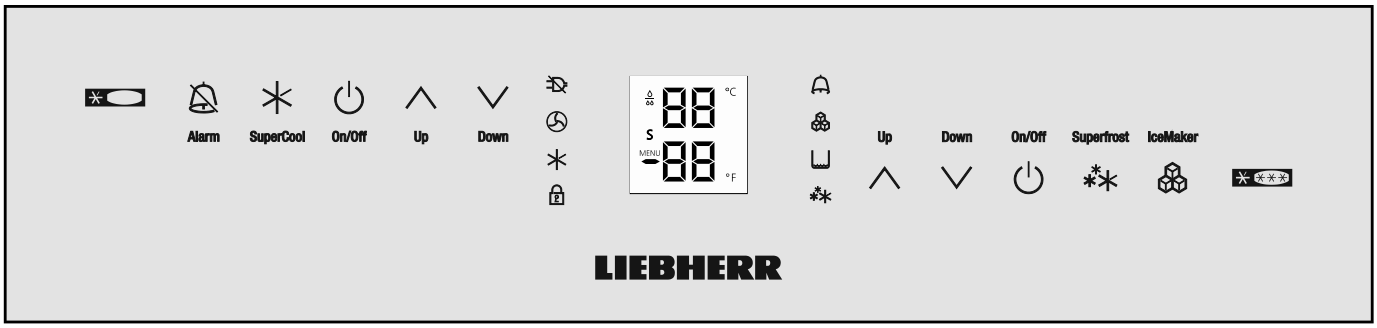

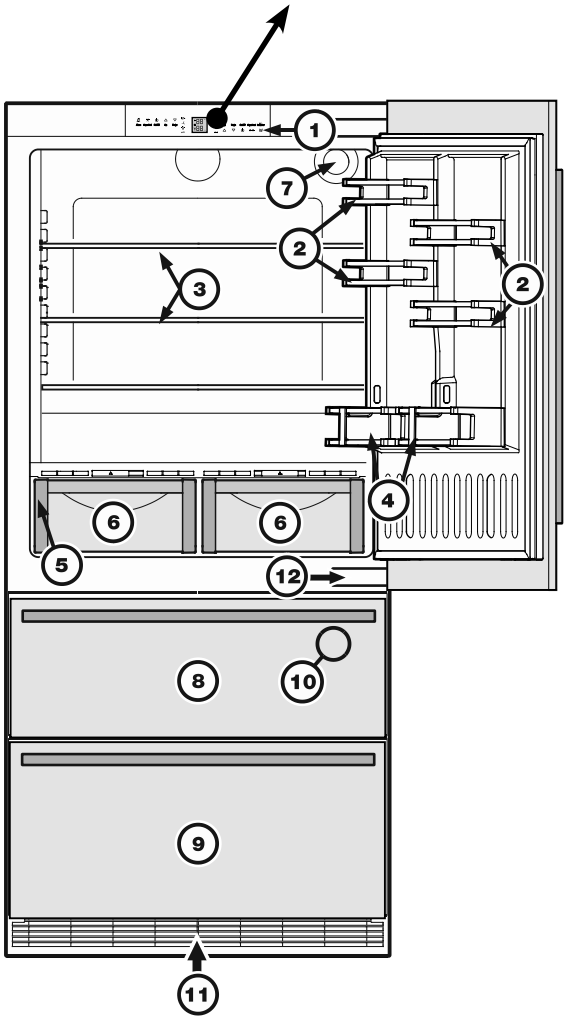

Figure 5

Description of refrigerator

(1) Operating and control elements
(2) Adjustable door racks
(3) Adjustable shelves
(4) Gallon rack

(5) Model plate → (behind the BioFresh drawer on the left hand side)

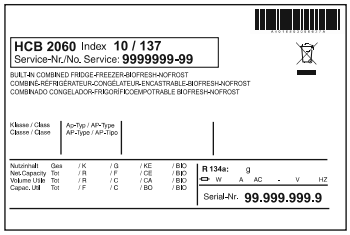

(6) BioFresh drawers
(7) Water filter

Description of freezer

(8) Upper freezer drawer
(9) Lower freezer drawer
(10) Ice maker (in the interior of the upper freezer drawer)
(11) Ventilation grille
(12) Lower hinge

Operating and Control Elements - Figure 6, Figure 7

The electronic control panel uses **touch capacitance technology**. Any function can be activated by a fingertip on the symbol of the operating icons.

The exact contact point is between the symbol and its label 

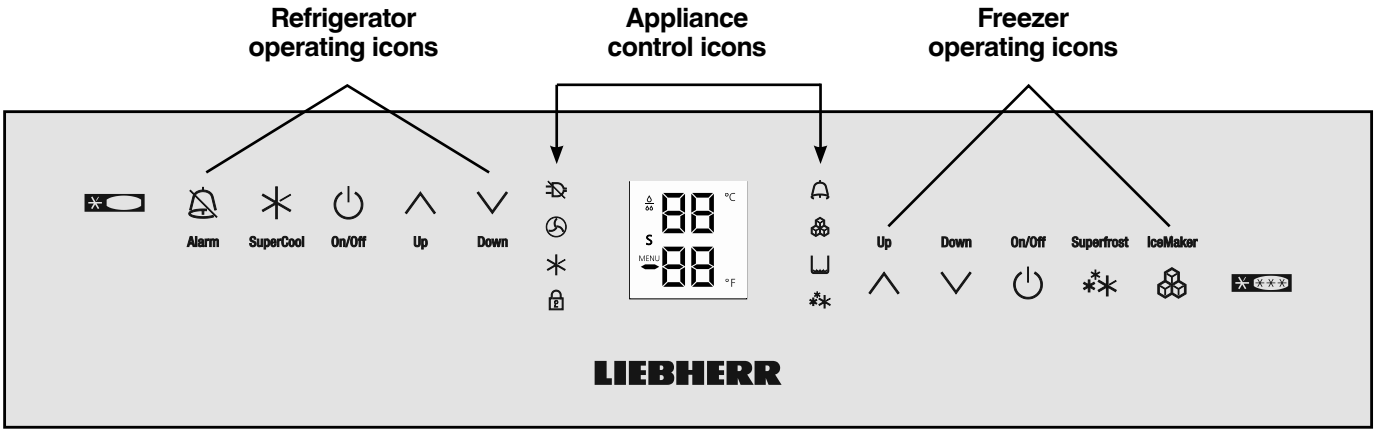

Figure 6

Refrigerator operating icons

- Alarm mute (refrigerator and freezer)
- SuperCool
- Refrigerator On/Off
- Temperature Up control (to increase the refrigerator temperature)
- Temperature Down control (to reduce the refrigerator temperature)

Appliance control icons

- Power Failure LED
- Air Filter LED
  When this LED lights up the air filter in the toe kick area has to be cleaned.
- SuperCool LED
- Child lock LED
- Alarm LED
- IceMaker On LED
- SuperFrost LED

Freezer operating icons

- Temperature Up control (to increase the freezer temperature)
- Temperature Down control (to reduce the freezer temperature)
- Freezer On/Off
- SuperFrost
- IceMaker On/Off

Temperature and control display

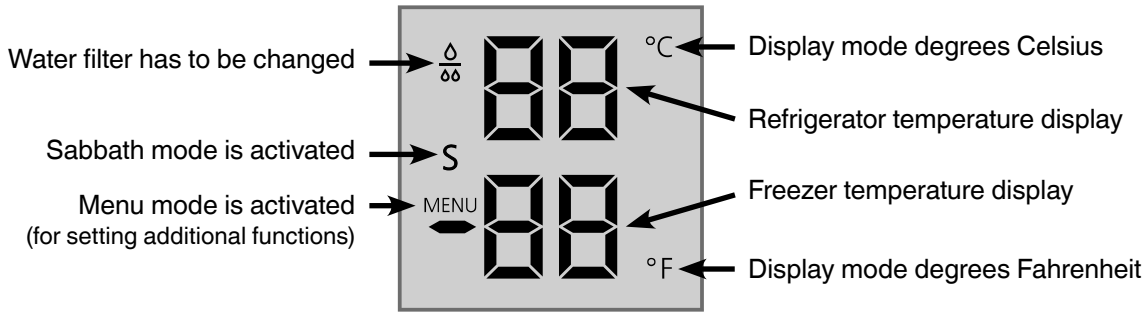

Figure 7

Turning the Appliance On and Off - Figure 8

Clean the appliance before turning it on for the first time. See **Cleaning**.

Do not place frozen food in the freezer until the temperature shows at least 0°F / -18°C. The refrigerator and freezer compartments can be operated separately.

1. **Turning on:** Touch the Refrigerator On/Off icon and the Freezer On/Off icon so the Temperature Displays light up.

2. **Turning off:** To turn off the refrigerator or freezer, touch the corresponding On/Off icon for approximately 3 seconds so the temperature display and interior lights go out.

Setting the Temperature - Figure 8

The appliance is pre-set for normal operation. We recommend temperatures of 38°F (3°C) in the refrigerator and 0°F (-18°C) in the freezer.

To reduce the temperature:

Touch the DOWN icon on the left to reduce the refrigerator temperature and the DOWN icon on the right to reduce the freezer temperature.

To increase the temperature:

Touch the UP icon on the left to increase the refrigerator temperature and on the right to increase the freezer temperature.

1. While you are entering the temperature, **the set temperature will flash** on the display.
2. When you touch the temperature setting icons for the first time, the most recent setting is displayed.
3. You can change the settings in increments of 1°F (1°C) by briefly touching the icons again. If the icons are held, the temperature setting will change faster.
4. Approximately five seconds after the icon has been released, the display will automatically show the actual freezing or cooling temperature.
5. You can change the temperatures:

- **In the refrigerator** – between 37°F and 45°F (3°C and 7°C) and
- **In the freezer** – between -15°F and 7°F (-27°C and -14°C).

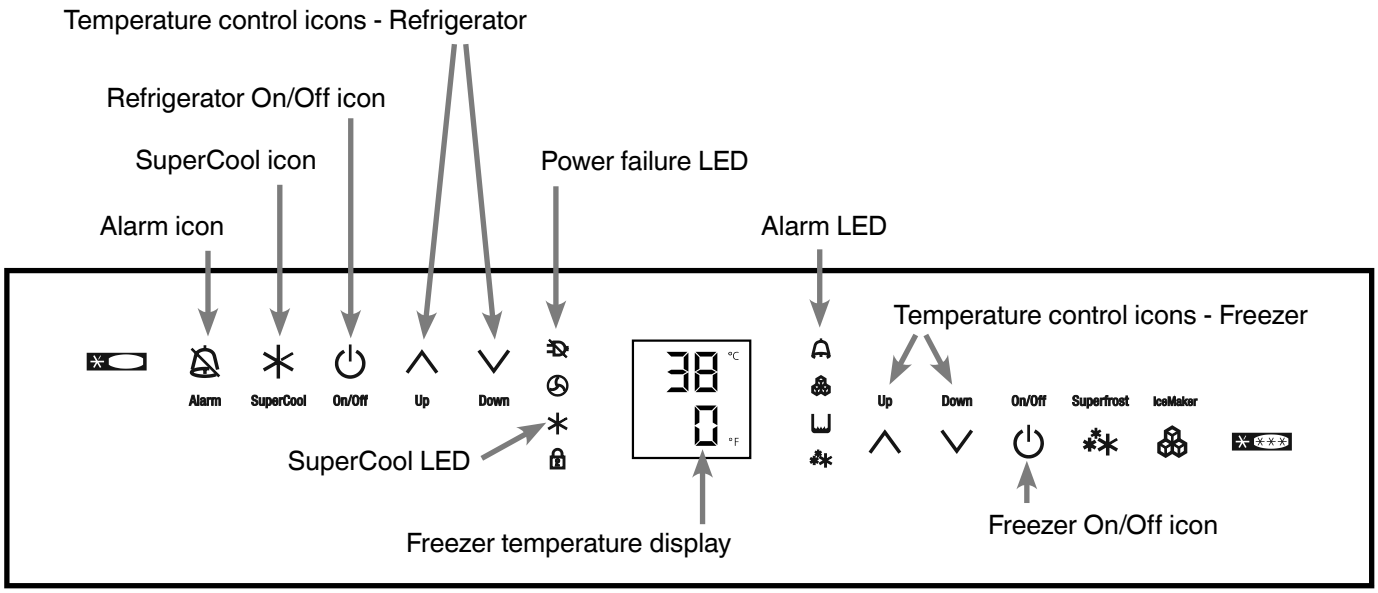

Figure 8

Temperature Display - Figure 8

In normal operation, the following settings will be displayed:

- the average refrigerator temperature
- the warmest frozen food temperature.

When starting up for the first time or when the appliance is warm, dashes will appear in the freezer temperature display until the temperature in the freezer compartment is 32°F (0°C).



It will take between three and eight hours for the required temperature, 0°F or 38°F (-18°C or 3°C) to be reached and displayed permanently in the display, depending on the ambient conditions and the temperature setting.

The display will flash:

- If you change the temperature or
- If the temperature rises by several degrees, indicating cold loss, e.g. if you place fresh, "warm" food in the freezer or if you remove or repack frozen food, the temperature may rise for a short time due to warm air flowing into the freezer.
- If "F1" to "F5" appears in the display, the appliance has a fault. Have the fault number available when you contact the customer service department.

Power Failure/Frost-Control Display - Figure 8

If the power failure LED is lit, this means the freezer temperature has risen too **high** during the last few hours or days due to a power failure. The freezer temperature display flashes at the same time.

- If you touch the **Alarm** icon now, the highest temperature registered during the power failure will be displayed.
- Check the quality of the food in case it has become too warm or even defrosted.
- The highest temperature will appear for approximately one minute. After that, the actual temperature in the freezer will reappear.

  The display can be turned off by touching the Alarm icon again.

Audible Alarm Signal - Figure 8

The audible alarm signal helps to protect frozen food and to save energy.

The audible alarm signal is switched off by touching the alarm icon.

Audible door alarm

This sounds when the door has been left open for longer than about 180 seconds. The sound switch-off function is active as long as the door is left open. The alarm automatically switches back to standby when the door is shut.

Audible/visual temperature alarm

It always sounds if the freezer temperature is not low enough. The temperature display and the alarm LED flash at the same time.

This can be caused by:

- warm, fresh food being placed in the freezer;
- too much warm air from the outside entering when rearranging or removing frozen food,
- a fault in the appliance.

The temperature display will continue to flash until the cause of the alarm has been rectified. It will then stop flashing and light up continually. The audible warning signal is now automatically reset.

SuperCool - Figure 8

Touching the SuperCool icon switches the refrigerator compartment to maximum cooling. It is recommended particularly if you wish to cool large quantities of food, drinks, freshly baked goods or meals rapidly.

- **Turning on:** Touch the SuperCool icon briefly so the LED turns on. The refrigerator temperature will drop to its lowest value.

  IMPORTANT

  The SuperCool function uses slightly more energy. After approximately six hours, however, the refrigerator switches back automatically to normal energy-saving operation. If required, the SuperCool function can be turned off sooner.

- **Turning off:** Touch the SuperCool icon again until the LED turns off.

Setup Mode

In the setup mode you can activate the following functions:

5 = Sabbath mode

c = Child lock

F = Drop symbol reset

i = Ice maker function test (for service personnel only)

E = Water quantity for ice cube tray

b = BioFresh temperature adjustment

o = Temperature display mode

h = Display brightness

H = Lower hinge heating control

n = Reset air filter LED

How to activate the setup mode - Figure 9

- Touch the **SuperFrost** icon for approximately five seconds
  - the **SuperFrost LED** ✱ turns on for 5 seconds
  - after 5 seconds 5 will flash in the display.

The appliance is in the setup mode now.

You can select the setup mode functions by touching the freezer compartment **Up/Down** icons.

Note

In the setup mode the display will flash continuously.

Exit setup mode:

- Touch the freezer compartment **On/Off** icon. The appliance will change back to normal operation.

5 = Sabbath mode

This feature considers the Religious requirements on Sabbath or Holidays. When the Sabbath mode is active some functions of the electronic controls are switched off.

The door can be opened and closed at any time.

- The lighting remains off.
- The cooling fan remains in its actual state: If it is on it remains on, if it is off it remains off.
- There is no door alarm.
- There is no temperature alarm.
- Defrost cycles are independent of the number of times and length of door openings.
- The unit will return into Sabbath Mode after a power failure.

How to activate the Sabbath mode

- Activate the setup mode by touching the **SuperFrost** icon for 5 seconds.
  - the display shows 5
- Touch the **SuperFrost** icon
  - the display shows → 
- Touch the **SuperFrost** icon again
  - the display shows → 
  - the Sabbath mode is activated.
- Exit setup mode by touching the freezer compartment **On/Off** icon.

Sabbath mode switches off automatically after 120 hours if it is not manually switched off beforehand.

How to deactivate the Sabbath mode

- Activate the setup mode by touching the **SuperFrost** icon for 5 seconds.
  - the display shows 5
- Touch the **SuperFrost** icon
  - the display shows → 
- Touch the **SuperFrost** icon again
  - the 5 symbol → 
  - in the display disappears,
  - the Sabbath mode is deactivated.
- Exit setup mode by touching the freezer compartment **On/Off** icon.

c = Child lock

The child lock is designed to protect the appliance from being turned off accidentally.

How to activate the child lock

- Activate the setup mode by touching the **SuperFrost** icon for 5 seconds
- Touch the **freezer compartment Down** icon until c appears in the freezer temperature display.
- Touch the **SuperFrost** icon

  - the display shows → 
- Touch the **SuperFrost** icon again

  - the LED is lit and the child lock is activated.
- Exit setup mode by touching the freezer compartment **On/Off** icon.

How to deactivate the child lock

- Activate the setup mode by touching the **SuperFrost** icon for 5 seconds.

  - the display shows → 
- Touch the **SuperFrost** icon

  - the display shows → 
- Touch the **SuperFrost** icon again

  - the LED goes out. The child lock is deactivated.
- Exit setup mode by touching the freezer compartment **On/Off** icon.

F = Drop symbol reset

After the water filter has been changed the drop symbol on the display must be reset.



How to reset the drop symbol

- Activate the setup mode by touching the **SuperFrost** icon for 5 seconds.
- Touch the **freezer compartment Down** icon until F appears in the freezer temperature display.
- Touch the **SuperFrost** icon

  - the display shows → 
- Touch the **SuperFrost** icon again

- the display shows → 
- The drop symbol disappears.
- Exit setup mode by touching the freezer compartment **On/Off** icon.

= Ice maker function test

Activation by service personnel only.

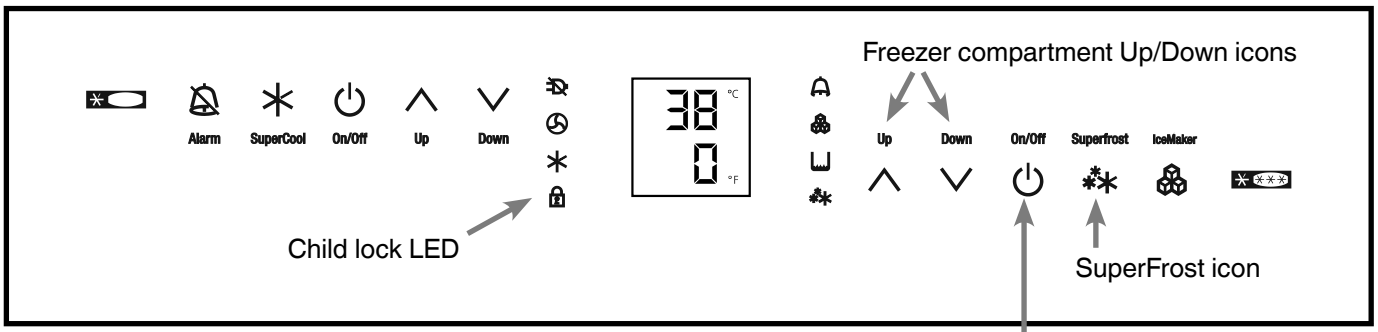

Figure 9

Setup Mode - Figure 10

E = Water quantity for ice cube tray

If the ice cubes produced by the ice maker are too small, the inflowing water quantity can be adjusted.

How to adjust the water quantity

- Activate the setup mode by touching the **SuperFrost** icon for 5 seconds.
- Touch the **freezer compartment Down** icon until E appears in the freezer temperature display.
- Touch the **SuperFrost** icon

  - the display shows → 
- Touch the **freezer compartment Up** icon once only so E4 appears in the display.

IMPORTANT

Do not increase for more than one step. If the adjusted value is too high, the ice cube tray of the ice maker could overflow.

- Touch the **SuperFrost** icon again.
- Exit setup mode by touching the freezer compartment **On/Off** icon.

Check the ice cube size within the next days. If the ice cubes are still smaller than desired, follow the steps above again.

b = Biofresh temperature adjustment

You can adjust the temperature in the BioFresh drawers.

How to adjust the Biofresh temperature

- Activate the setup mode by touching the **SuperFrost** icon for 5 seconds.
- Touch the **freezer compartment Down** icon until b appears in the freezer temperature display.
- Touch the **SuperFrost** icon

  - the display shows → 
- Touch **freezer compartment Up/Down** icons to select
  b6 - b9 to increase the temperature,
  b4 - b1 to reduce the temperature.

IMPORTANT

At values b4 - b1 the temperature in the drawers can drop below 32°F (0°C). Stored goods could freeze.

- Touch the **SuperFrost** icon at the desired value.
- Exit setup mode by touching the freezer compartment **On/Off** icon.

o = Temperature display mode

You can choose the **unit of temperature** for the display in degrees Fahrenheit or degrees Celsius.

Note

The factory setting is degrees Fahrenheit.

How to change the temperature display to degrees Celsius

- Activate the setup mode by touching the **SuperFrost** icon for 5 seconds.
- Touch the **freezer compartment Down** icon until o appears in the freezer temperature display.
- Touch the **SuperFrost** icon

  - the display shows → 
- Touch the **SuperFrost** icon again
  - the temperature reading is now displayed in degrees Celsius.
- Exit setup mode by touching the freezer compartment **On/Off** icon.

Note

To change the temperature display back to degrees Fahrenheit, follow the steps above.

h = Display brightness

How to adjust the display brightness

- Activate the setup mode by touching the **SuperFrost** icon for 5 seconds.
- Touch the **freezer compartment Down** icon until h appears in the freezer temperature display.
- Touch the **SuperFrost** icon

  - the display shows → h5
- Touch the **freezer compartment Up/Down** icons to select
  h 0 = minimum to
  h 5 = maximum brightness
- Touch the **SuperFrost** icon at the desired value.
- Exit setup mode by touching the freezer compartment **On/Off** icon.

H = Lower hinge heating control

If condensed water appears in the lower hinge area or on the base plate between refrigerator and freezer compartment, increase the output of the heating located behind the base plate.

The factory setting is set to HA = medium output

How to change the heating output

- Activate the setup mode by touching the **SuperFrost** icon for 5 seconds
- Touch the **freezer compartment Down** icon until H appears in the freezer temperature display.
- Touch the **SuperFrost** icon

- the display shows → HA
- Touch **freezer compartment Up/Down** icons to select
  HA = at slight condensation
  H 1 = at heavy condensation
  H0 = heating off
- Touch the **SuperFrost** icon at the desired value.
- Exit setup mode by touching the freezer compartment **On/Off** icon.

Note

With normal ambient conditions no condensation will appear. With high humidity and low ambient temperature this feature helps to prevent condensation.

n = Reset air filter LED

After the air filter in the toe kick area has been cleaned the air filter LED must be reset. For how to clean the air filter refer to chapter “Cleaning”.

How to reset the air filter LED

- Activate the setup mode by touching the **SuperFrost** icon for 5 seconds.
- Touch the **freezer compartment Down** icon until n appears in the freezer temperature display.
- Touch the **SuperFrost** icon

  - the display shows → n0
- Touch the **SuperFrost** icon again

  - the display shows → n
- The air filter LED disappears.
- Exit setup mode by touching the freezer compartment **On/Off** icon.

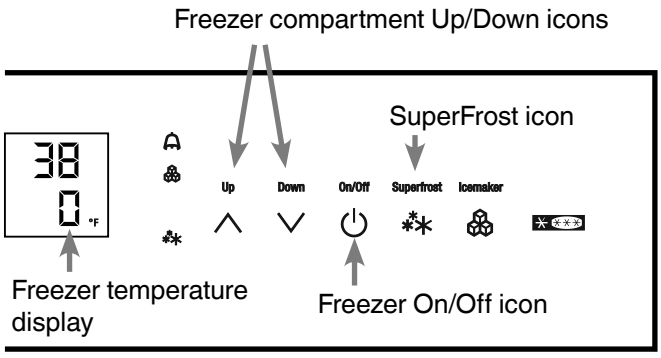

Figure 10

Refrigerator Compartment

Arranging Food - Figure 11

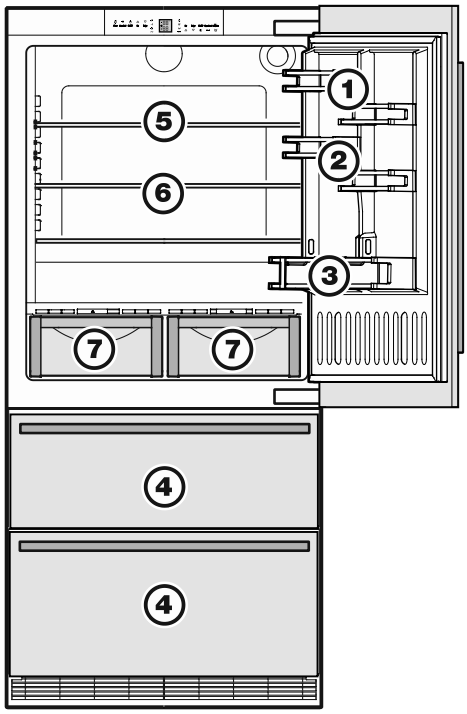

Figure 11

(1) Butter, cheese
(2) Eggs
(3) Gallon containers, cans, drinks, bottles
(4) Frozen food, ice cubes
(5) Meat and sausage products, dairy products
(6) Baked goods, pre-cooked meals
(7) Fruit, vegetables, salad (at high humidity setting) Meat and sausage products, dairy products (at low humidity setting). Refer to chapter “Biofresh Compartment” for explanation.

IMPORTANT

- Liquids and food which give off or absorb odors and flavors should always be stored covered or in closed containers.
- High-percentage alcohols should be tightly sealed and stored upright.
- Fruit, vegetables and salad can be stored unpacked in the bins.

Shelf Arrangement

Repositioning the shelves - Figure 12

Note

Danger of damage through sharp edges. Damage to the surfaces/glass shelves. Carefully insert the glass shelves.

1. Hold the shelf underneath with your hand to avoid from tipping down backwards when removing.
2. Lift the shelf at the front.
3. Remove the shelf forward until the circular cutout of the shelf is in line with the interior light cover.
4. Lift the shelf up or down and replace in the desired position.

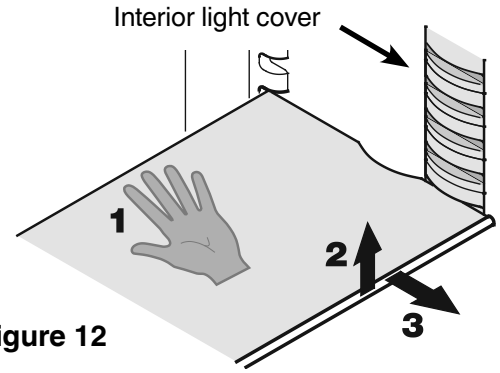

Figure 12

Removing the shelves - Figure 13

1. Follow the first three steps in the chapter above.
2. Lift the shelf down and stop just over the upper vegetable bin.
3. Move the front of the shelf upwards until the shelf is in a vertical position.
4. Turn the shelf out at left and remove.

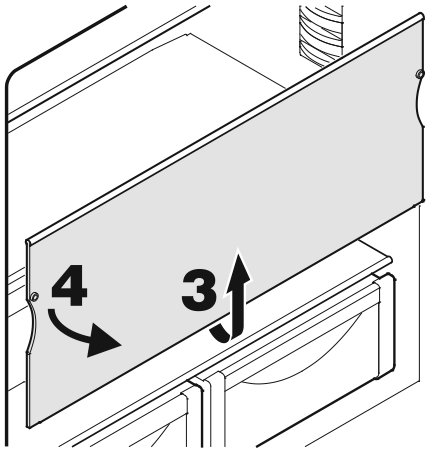

Figure 13

Bottle tray

The tray above the BioFresh compartment can be used for storing bottles horizontally.

Remove glass plate and reinsert under the tray - **Figure 14**.

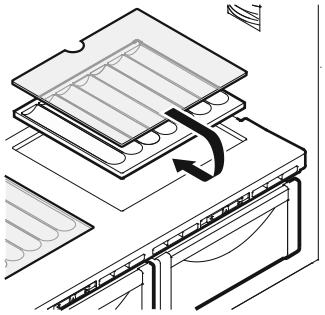

Figure 14

The cavities in the plate ensures secure placement of the bottles - **Figure 15**.

IMPORTANT

When storing tall bottles horizontally, the gallon rack must be relocated to a higher position.

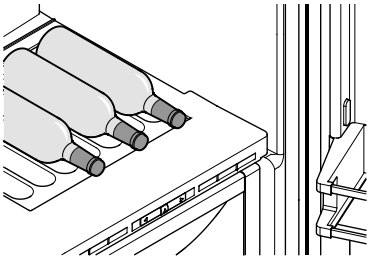

Figure 15

To remove the BioFresh drawer

Pull the drawer straight out, grip at the back and lift out - **Figure 16**.

To install the BioFresh drawer

Place the drawer on the rails. The rails must be fully extended and aligned with the front of the drawer. Slide the drawer in.

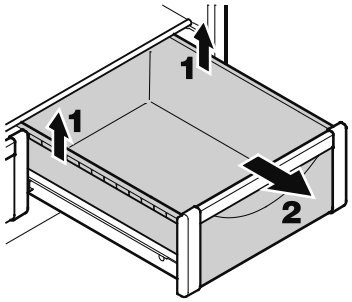

Figure 16

Interior Light - Figure 17

The interior light is located at the left, right and top in the refrigerator compartment and above each drawer in the freezer compartment.

It turns on if the refrigerator door or one freezer drawer is opened.

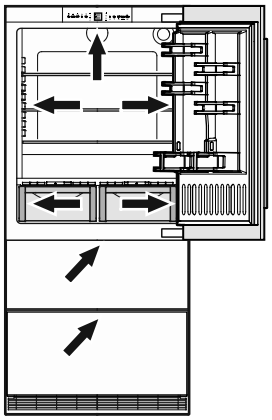

Figure 17

The light turns off automatically if the refrigerator door or one freezer drawer has been opened for approximately 15 minutes. The audible alarm sounds at the same time.

The light intensity of the LED light corresponds to laser class 1/1M.

IMPORTANT

The light cover may only be removed by customer service staff.

⚠ CAUTION!

Risk of eye damage.

If the cover is removed, do not look directly at the light through optical lenses from a close distance.

BioFresh Compartment

BioFresh Compartment - Figure 18

The BioFresh compartment maintains food freshness up to 3 times longer than in standard refrigerators.

The constant temperature just above 32°F (0°C) and the adjustable humidity provides the ideal storage conditions for different types of food.

The temperature of the BioFresh compartment (simultaneously) can be adjusted.

Refer to chapter **Setup Mode** - = **Biofresh temperature adjustment**

Figure 18

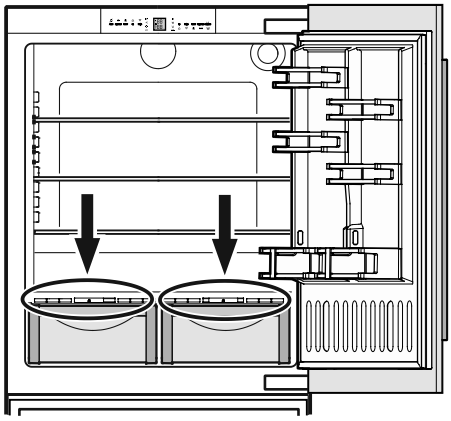

Humidity selection

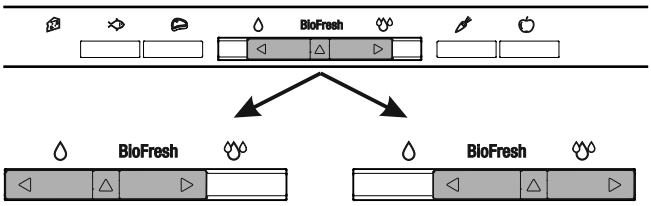

Slide control to left

This setting is suitable for dry or wrapped food like dairy products, meat, fish, cold cuts.

Slide control to right

This setting is suitable for storing unwrapped food with a high moisture content such as salad, vegetables and fruit.

Notes

- The humidity in the compartment depends on the moisture content of the food and the frequency a drawer is opened.
- The fresher the product and the higher its quality, the longer the storage life.
- Unwrapped food should be stored separately. Wrap food if there is not enough space in the drawers. To avoid bacterial spoilage, different types of meat should not come into contact with each other. Keep meat packed separately.
- The following products should not be stored in the BioFresh compartment: hard cheese, potatoes, cold-sensitive vegetables such as cucumber, eggplant, avocados, semi-ripe tomatoes, zucchini, and all cold-sensitive tropical fruits such as pineapple, bananas, grapefruit, melons, mangoes, papaya, etc.

Storage Times

for food in the BioFresh compartment:

Dry setting

butter	up to 30 days
cheese, soft	up to 30 days
milk, fresh	up to 7 days
sausage, cold cuts	up to 7 days
fish	up to 4 days
shellfish	up to 3 days
poultry	up to 5 days
pork	
large portions	up to 7 days
cut up	up to 5 days
beef	up to 7 days
game	up to 7 days

Humid setting

Vegetables, salad

artichokes	up to 21 days
asparagus	up to 14 days
broccoli	up to 14 days
Brussels sprouts	up to 30 days
cabbage	up to180 days
carrots	up to150 days
cauliflower	up to 21 days
celery	up to 30 days
chicory	up to 30 days
Chinese cabbage	up to 14 days
curly kale	up to 14 days
fennel	up to 21 days
garlic	up to180 days
green onions	up to 7 days
herbs	up to 30 days
iceberg salad, endives, lamb's lettuce	up to 21 days
kohlrabi	up to 14 days
leeks	up to 60 days
lettuce	up to 10 days
mushrooms	up to 7 days
peas	up to 10 days
radicchio	up to 21 days
radishes	up to 14 days
savoy cabbage	up to 60 days
spinach	up to 7 days

Fruit

apples	up to 180 days
apricots	up to 14 days
bilberries	up to 14 days
blackberries	up to 8 days
cherries	up to 14 days
black and red currants	up to 21 days
dates (fresh)	up to 60 days
figs (fresh)	up to 7 days
gooseberries	up to 21 days
grapes	up to 90 days
kiwi fruits	up to120 days
peaches	up to 30 days
pears	up to120 days
plums	up to 21 days
quinces	up to 90 days
raspberries	up to 5 days
rhubarb	up to 21 days
strawberries	up to 5 days

Freezer Compartment

Freezer Compartment Description

The ice maker is located in the upper drawer on the right side.

The ice cubes fall out of the ice maker into the drawer.

The upper drawer is divided by a partition wall for storing ice cubes in the right part of the drawer (**Figure 19)**.

If you need more ice cube storage space, pull up the partition wall and refit on the adjacent rail (**Figure 19).**

If you need the whole upper drawer for freezing and storing food, turn off the ice maker (see chapter “Turning the Ice Maker On and Off”).

The bottom drawer is intended for freezing and storing food. Ice cubes can also be stored in this drawer.

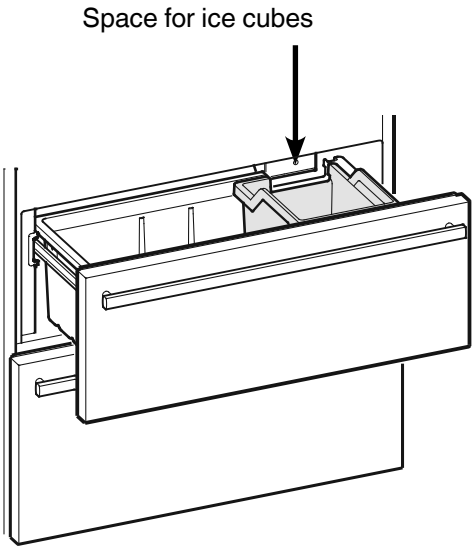

Figure 19

Removing the Freezer Compartment Containers

The containers of both freezer drawers can be removed.

- Unlatch the container on the left and right corners by pulling upwards (1) **- Figure 20.**
- Slide the container backwards (2) **- Figure 20**.

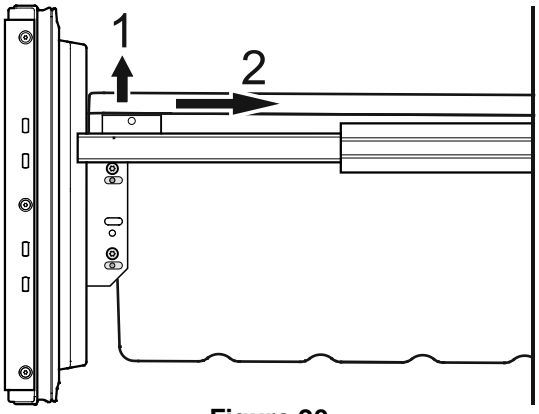

Figure 20

- Tilt the container at an angle and remove **- Figure 21.**

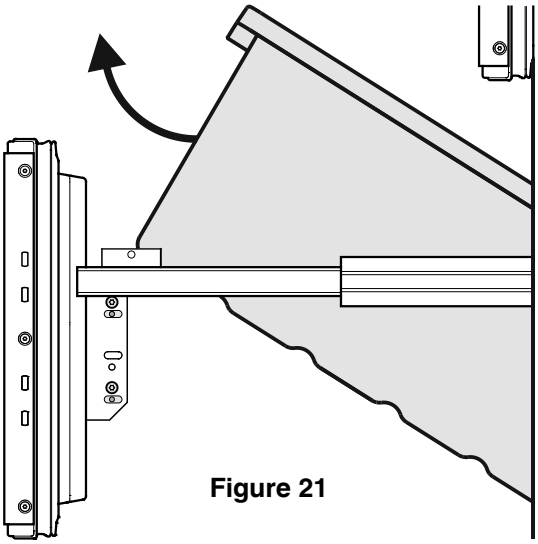

Figure 21

Install the container in the reverse order.

Freezing

Fresh food should be frozen completely and as rapidly as possible. This is provided by the SuperFrost feature and ensures that the nutritional value, appearance and flavor of the food remains intact.

Freezing with SuperFrost - Figure 22

- Touch the SuperFrost icon briefly so the LED ❄ turns on.
- Wait 24 hours.
- Then place the fresh food inside the freezer.
- The SuperFrost function turns off automatically. Depending on the quantity of food placed in the freezer, this will normally be between 30 and a maximum of 65 hours.

  The freezing process is now complete; the SuperFrost LED ❄ will turn off, and the freezer will change back to normal energy-saving operation.

IMPORTANT

You should <u>not</u> turn on the SuperFrost function:

- when placing frozen food in the freezer;
- when freezing up to approximately 4-1/2 lbs (2 kg) fresh food daily.

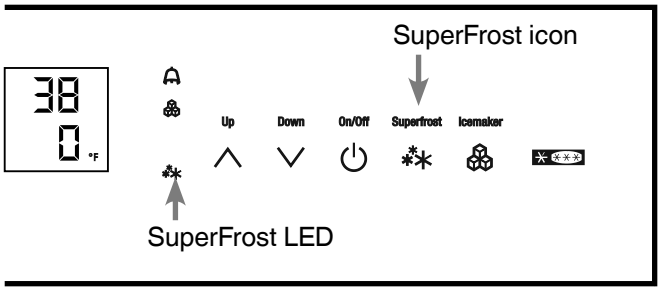

Figure 22

Freezing and Storage

- Pack frozen food in standard freezer bags or reusable plastic, metal or aluminum containers.
- Do not allow fresh food which is to be frozen to come into contact with food already frozen. Always keep packages dry in order to avoid them sticking together.
- Always write the date and contents on the package and do not exceed the stated storage time for the food. This prevents spoiling.
- Pack food which you are freezing yourself in quantities right for your household. To ensure the food freezes right through quickly, the following quantities should not be exceeded per package:

- fruit, vegetables: up to 2-1/4 lbs (1 kg);
- meat: up to 5-1/2 lbs (2.5 kg).

- Do not freeze bottles and cans which contain carbonated drinks as they might burst. Drinks can be cooled down quickly, but take the bottles out of the freezer compartment after an hour at the most.
- Only take out as much food as needed for thawing. Cook food which has been thawed as quickly as possible. Frozen food can be thawed in the following ways:

- in a microwave oven
- in the refrigerator: the safer way to thaw food because there is less chance of bacteria growth. Use this method for high density food such as roasts or poultry.

Safety Instructions and Warnings for the Automatic Ice Maker

- The ice maker is designed exclusively to make ice cubes in quantities needed by a household.
- All repairs and work on the ice maker may only be done by customer service personnel or other appropriately trained personnel.
- **Do not consume or use the first three batches of ice. This applies both to using the appliance for the first time and also using it after it has not been used for a long period of time.**
- **The manufacturer cannot accept liability for damage caused by equipment or water lines between the solenoid valve and the water supply.**
- The ice maker will only make ice cubes if the freezer compartment is operating and both freezer drawers are completely closed.

Turning the Ice Maker On and Off

(Figure 23)

To turn the ice maker on

- Touch the **IceMaker icon** so the **IceMaker LED** comes on.

To turn the ice maker off

If you do not need any ice cubes, the ice maker can be turned off independently of the freezer compartment.

- Touch the IceMaker icon so the IceMaker LED goes out.

Ice maker at vacations

See chapter “Vacation tips”

Ice Maker Description

After you start the ice maker for the first time, it may take up to 24 hours before the first ice cubes are ready.

The ice cubes fall out of the ice maker into the drawer (see chapter “Freezer compartment description”).

IMPORTANT

The first three batches of ice must not be consumed or used.

When the ice reaches a certain level in the drawer, the appliance stops producing ice automatically.

The production capacity is 100 - 120 ice cubes in 24 hours at a temperature of 0°F (-18°C) inside the freezer compartment.

To have the maximum capacity of approx. 150 ice cubes in 24 hours, activate the SuperFrost function.

Be aware that this increases the energy consumption because the compressor will run constantly.

Note

If the IceMaker LED flashes, the ice maker is not being supplied with water. Check if the shut off valve of the water supply is opened.

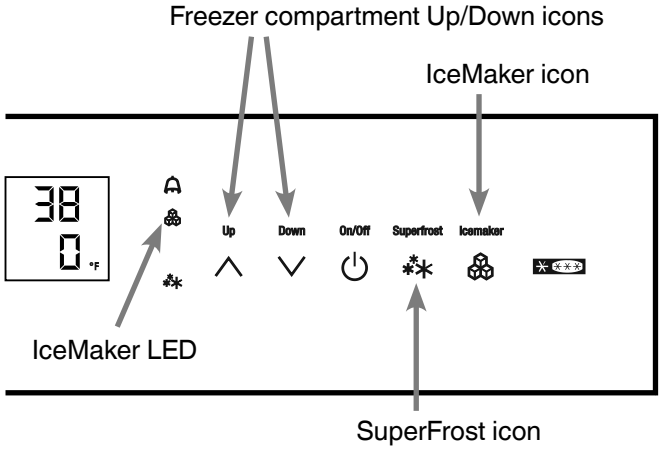

Figure 23

Defrosting

Refrigerator compartment

The refrigerator compartment defrosts automatically. The water that forms on the rear wall drains into a reservoir at the back of the appliance and evaporates automatically through the compressor heat.

Freezer compartment

The NoFrost system automatically defrosts the freezer compartment. Any moisture will collect on the evaporator and freeze. It will periodically defrost and evaporate.

Cleaning

⚠ WARNING!

- **To prevent possible injury due to an electrical shock, be sure to disconnect the power cord or turn off the circuit breaker before cleaning the appliance.**
- **To avoid injury or damage, do not use steam cleaning equipment to clean the appliance.**
- **To avoid short-circuits, ensure no cleaning water penetrates into the electrical components when cleaning the appliance. Do not use a sponge or cloth that is overly wet.**

Do not use abrasive or scouring sponges. **Do not** use concentrated cleaning agents. **Never** use abrasive or acid cleaners or chemical solvents.

- Remove all food from the refrigerator and freezer compartments and store in a cool place temporarily. Store frozen food in other freezers if available.
- Remove the door racks as shown in **Figure 24**.
- Remove The BioFresh drawers as shown in **Figure 16**.
- Remove glass shelves as shown in **Figure 13**.
- Remove the freezer drawer containers as shown in **Figure 20** and **Figure 21**.

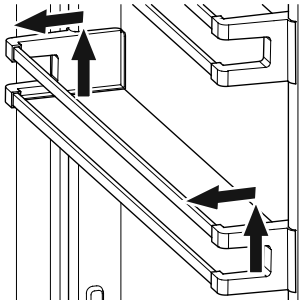

Figure 24

- A compound of lukewarm water and dishwasher detergent is recommended for cleaning the appliance and equipment parts.

IMPORTANT

Do not clean the equipment parts in a dishwasher. Strips of these parts could get loose.

- Dry all parts well with a cloth.
- **Do not** damage or remove the model plate on the inside of the appliance. It is very important for servicing your appliance.
- Install all equipment parts and replace the food in the appliance.
- Turn the appliance on.

Cleaning instructions for stainless steel panels

Keep your stainless steel looking new by cleaning with a good quality stainless steel cleaner or polish monthly. High quality stainless steel cleaners and conditioners are commercially available.

Do not clean with steel wool pads or abrasive pads. Do not use cleaners that are not for use on stainless steel, such as glass, tile or counter cleaners. These types of cleaners can damage the surface permanently.

Cleaning the Air Filter

- Open the bottom freezer drawer and remove the ventilation grille by pulling forwards - **Figure 25.**

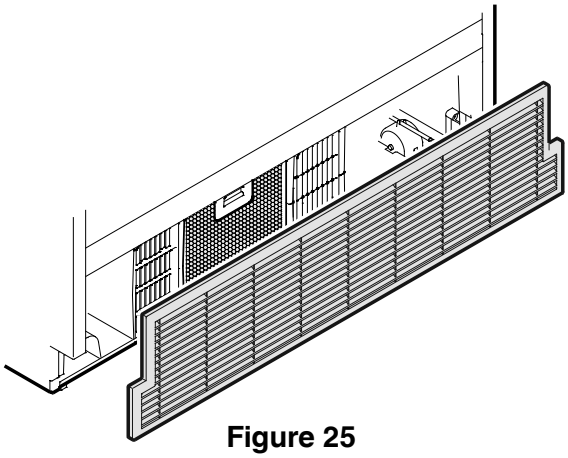

Figure 25

- Push down the button of the air filter, tilt to the front and remove - **Figure 26**.

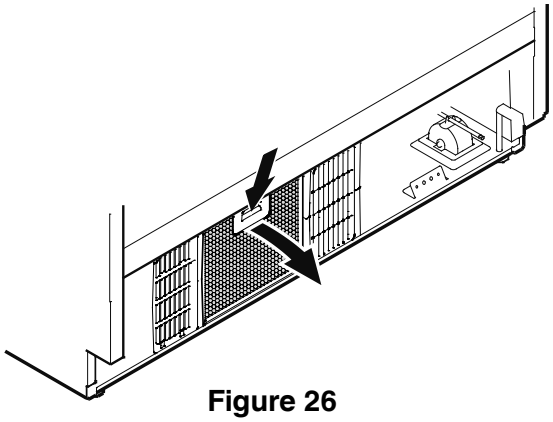

Figure 26

- Clean the filter in a dishwasher or by hand with lukewarm water and dishwasher detergent.
- Install the air filter in the reverse order.
- Install the ventilation grille.
- Install all equipment parts and replace the food in the appliance.
- Turn the appliance on.
- Reset the air filter LED.
  Refer to chapter **Setup Mode** - ⊓ = Reset air filter LED

Vacation Tips (Figure 27)

Short vacations

It is not necessary to turn off the refrigerator and freezer if you will be away for less than four weeks.

- Shut off the water supply to the ice maker.

> When the IceMaker LED starts blinking, the remaining water in the supply line is in the ice maker.

- Leave the ice maker on and working for one day so that the remaining ice cubes are ejected.
- Touch the IceMaker icon so that the IceMaker LED goes out.
- Transfer all ice cubes to the right part of the drawer or to the bottom drawer.
- Use all perishables.
- Freeze other items.

Long vacations

If you will be away for a month or more:

- Shut off the water supply to the ice maker.

> When the IceMaker LED starts blinking, the remaining water in the supply line is in the ice maker.

- Leave the ice maker on and working for one day so that the remaining ice cubes are ejected.
- Touch the IceMaker icon so that the IceMaker LED goes out.
- Remove all ice cubes from the drawer and dispose of them.
- Remove all food from the refrigerator and freezer compartments.
- Turn off the refrigerator and freezer compartments.
- Clean the appliance. Refer to **Cleaning**.
- Leave the door and both freezer drawers open to prevent unpleasant odors. This will also keep mold from building up.

Turning on the ice maker after vacation

- Open the water suppy to the ice maker.
- Touch the IceMaker icon so that the IceMaker LED comes on.

IMPORTANT

Do not consume or use the first three batches of ice after the ice maker has not been used for longer than one week.

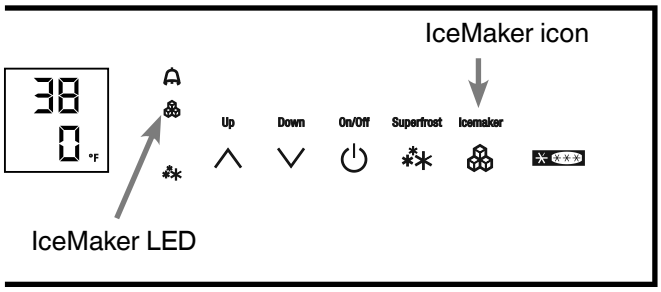

Figure 27

Troubleshooting

Your appliance is designed and manufactured for a long life and reliable operation.

If a problem occurs during operation, check whether it is due to an operating error. Please note that even during the warranty period, some repair costs may be your responsibility.

You may be able to correct the following faults by checking the possible causes yourself:

Problem	Possible Cause and Remedy
Appliance does not work, display is off	- Is the appliance turned on properly? - Is the power cord properly inserted in the outlet? - Is the circuit breaker or fuse in operating condition?
The interior light does not come on	- Is the appliance turned on?
Motor seems to run too long	- Is the ambient temperature too hot? See **Safety Regulations**. - Has the appliance been opened too often or left open too long? - A large amount of food has been added. - Unit is in SuperCool mode. Verify unit is in normal operation mode.
The temperature is not cold enough	- Is the temperature setting correct? See **Setting The Temperature**. - Has an excessive amount of fresh food been placed in the appliance? - Does a separately installed thermometer show the correct reading? - Is the ventilation system working properly? - Is the appliance set up too close to a heat source?
Freezer temperature display shows two dashes “- -”.	The freezer temperature display will only show temperatures that are below freezing. When initially starting the freezer, it will not be below freezing. It will take three to five hours (depending on ambient conditions) for freezing temperatures to be achieved and thus displayed numerically. This may also occur after a power failure.

Ice Maker Troubleshooting

You may be able to correct the following faults yourself:

Problem	Possible Cause and Remedy
Ice maker cannot be turned on	- Is the appliance connected to the electrical outlet?
Ice maker is not making any ice	- Is the ice maker turned on? - Is the water supply line open? - Are both freezer drawers closed properly?

Customer Service

If none of the above possible causes apply, and you can not rectify the fault yourself, contact your nearest customer service representative.

Indicate the type **(1)** of appliance, service number **(2)** and the appliance / serial number **(3)** as indicated on the model plate.

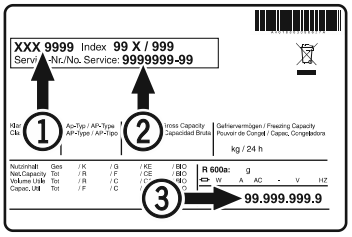

The position of the model plate is shown in the section entitled **Description of the Appliance**.

Appliance Information

Record this information when the appliance is installed.

Type Designation: _____

Service Number: _____

Appliance / Serial Number: _____

Date of Purchase: _____

Where Purchased: _____

For Service in the U.S.

Liebherr Service Center

Toll Free: **1-866-LIEBHER or 1-866-543-2437**

Email: Service-appliances.us@liebherr.com

PlusOne Solutions, Inc.
3501 Quadrangle Blvd, Suite 120
Orlando, FL 32817

For Service in Canada

Liebherr Service Center

Toll Free: **1-888-LIEBHER or 1-888-543-2437**

www.euro-parts.ca

EURO-PARTS CANADA
39822 Belgrave Road
Belgrave, Ontario, N0G 1E0
Phone: (519) 357-3320
Fax: (519) 357-1326

www.liebherr-appliances.com