fridgemaster

How to use your new Fridge Freezer

Model MS91500IFB

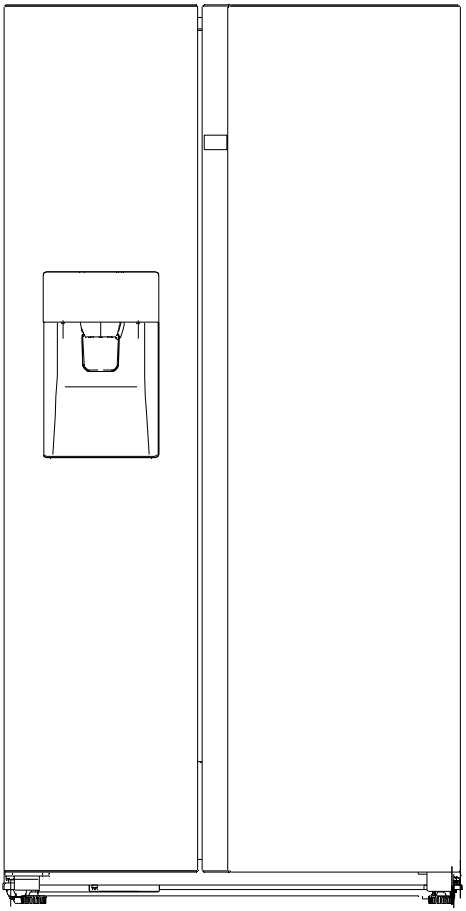

Contents

Safety and warning information.....2
Installing your new appliance.....8
Description of the appliance.....10
Display controls.....11
Using your appliance.....15
Cleaning and care.....20
Helpful hints and tips..... 22
Troubleshooting.....24
Disposal of the appliance.....26

Safety and warning information

For your safety and correct usage, before installing and first using the appliance, read this user manual carefully, including its hints and warnings. To avoid unnecessary mistakes and accidents, it is important to make sure that all people using the appliance are thoroughly familiar with its operation and safety features. Save these instructions and be sure that they remain with the appliance if it is moved or sold, so that anyone using it throughout its life, will be properly informed on its usage and safety notices.
For the safety of life and property, keep the precautions of these user's instructions as the manufacturer is not responsible for damages caused by omission.

Safety for children and otherswho are vulnerable people

- According to EN standard
  This appliance can be used by children aged from 8 years and above and persons with reduced physical, sensory or mental capabilities or lack of experience and knowledge if they have been given supervision or instruction concerning use of the appliance in a safe way and understand the hazards involved. Children shall not play with the appliance. Cleaning and user maintenance shall not be made by children without supervision.
  According to IEC standard
  This appliance is not intended for use by persons (including children) with reduced physical, sensory or mental capabilities, or lack of experience and knowledge, unless they have been given supervision or instruction concerning use of the appliance by a person responsible for their safety.

- Keep all packaging away from children as there is risk of suffocation.
- If you are discarding the appliance, pull the plug out of the socket, cut the connection cable (as close to the appliance as you can) and remove the door to prevent children playing from suffering an electric shock or from closing themselves inside it.
- If this appliance, featuring a magnetic door seals, is to replace an older appliance having a spring lock (latch) on the door or lid, be sure to make the spring lock unusable before you discard the old appliance. This will prevent it from becoming a death trap for a child.

General safety



- WARNING —This appliance is intended to be used in household and similar applications such as
  -staff kitchen areas in shops, offices and other working environments;
  -farm houses and by clients in hotels, motels and other residential type environments;
  -bed and breakfast type environments;
  -catering and similar non-retail applications.
- WARNING — Fill with potable water only.
- WARNING — Do not store explosive substances such as aerosol cans with a flammable propellant in this appliance.
- WARNING — If the supply cord is damaged, it must be replaced by the manufacturer, its service agent or similarly qualified persons in order to avoid a hazard.
- WARNING — Keep ventilation openings, in the appliance enclosure or in the built-in structure, clear of obstruction.
- WARNING — Do not use mechanical devices or other means to accelerate the defrosting process, other than those recommended by the manufacturer.
- WARNING — Do not damage the refrigerant circuit.
- WARNING — Do not use electrical appliances inside the food storage compartments of the appliance, unless they are of the type recommended by the manufacturer.

- WARNING — The refrigerant and insulation blowing gas are flammable. When disposing of the appliance, do so only at an authorized waste disposal centre. Do not expose to flame.
- WARNING —When positioning the appliance, ensure the supply cord is not trapped or damaged.
- WARNING —Do not locate multiple portable socket-outlets or portable power supplies at the rear of the appliance.

Replacing the illuminating lamps

- WARNING—The illuminating lamps must not be replaced by the user! If the illuminating lamps is damaged, contact the customer helpline for assistance.

This warning is only for refrigerators that contain illuminating lamps.

Refrigerant

The refrigerant isobutene (R600a) is contained within the refrigerant circuit of the appliance, a natural gas with a high level of environmental compatibility, which is nevertheless flammable. During transportation and installation of the appliance, ensure that none of the components of the refrigerant circuit becomes damaged.
The refrigerant (R600a) is flammable.

- WARNING — Refrigerators contain refrigerant andgases in the insulation. Refrigerant and gases must be disposed of professionally as they may cause eye injuries or ignition. Ensure that tubing of the refrigerant circuit is not damage prior to proper disposal.



WARNING:Risk of fire / flammable materials

If the refrigerant circuit should be damaged:
-Avoid opening flames and sources of ignition.
-Thoroughly ventilate the room in which the appliance is situated.

It is dangerous to alter the specifications or modify this product in any way.
Any damage to the cord may cause a shortcircuit, fire, and/or electric shock.

Electrical safety

1.The power cord must not be lengthened.
2. Make sure that the power plug is not crushed or damaged. A crushed or damaged power plug may overheat and cause a fire.
3. Make sure that you can access the main plug of the appliance.
4. Do not pull the main cable.
5. If the power plug socket is loose, do not insert the power plug. There is a risk of electric shock or fire.
6.You must not operate the appliance without the interior lighting lamp cover.
7.The fridge is only applied with power supply of single phase alternating current of 220~240V/50Hz. If fluctuation of voltage in the district of user is so large that the voltage exceeds the above scope, for safety sake, be sure to apply A.C. Automatic voltage regulator of more than 350W to the fridge. The fridge must employ a special power socket instead of common one with other electric appliances. Its plug must match the socket with ground wire.

Daily use

- Do not store flammable gass or liquids in the appliance, There is a risk of an explosion.
- Do not operate any electrical appliances in the appliance (e.g.electric ice cream makers,mixers etc.).
- When unplugging always pull the plug from the mains socket,do not pull on the cable.
- Do not place hot items near the plastic components of this appliance.
- This refrigerating appliance is not intended to be used as a built-in appliance.

- Do not place food products directly against the air outlet on the rear wall.
- Store pre-packed frozen food in accordance with the frozen food manufacture's instructions.
- The appliances manufactures storage recommendations should be strictly adhered to.Refer to relrelevant instructions for storage.
- Do not place carbonated or fizzy drinks in the freeze compartment as it creates pressure on the container,which may cause it to explode,resulting in damage to the appliance.
- Frozen food can cause frost burns if consumed straight from the freezer compartment.
- Do not place the appliance in direct sunlight.
- Keep buring candles,lamps and other items with naked flames away from the appliance so that do not set the appliance on fire.
- The appliance is intended for keeping food stuff and/or beverages in normal household as explained in this instruction booklet The appliance is heavy.Care should be taken when moving it.
- Do not remove nor touch items from the freezer compartment if your hands are damp/wet,as this could cause skin abrasions or frost/freezer burns.
- Never use the base,drawers, doors etc. to stand on or as supports.
- Frozen food must not be refrozen once it has been thawed out.
- Do not consume ice popsicles or ice cubes straight from the freezer as this can cause freezer burn to the mouth and lips.
- To avoid items falling and causing injury or damage to the appliance, do not overload the door racks or put too much food in the crisper drawers.

caution!

Care and cleaning

- Before maintenance, switch off the appliance and disconnect the mains plug from the mains socket.
- Do not clean the appliance with metal objects, steam cleaner, ethereal oils, organic solvents or abrasive cleansers.
- Do not use sharp objects to remove frost from the appliance. Use a plastic scraper.

Installation Important!

- For electrical connection carefully, follow the instructions given in this manual.
  Unpack the appliance and check if there are damages on it.
- Do not connect the appliance if it is damaged. Report possible damages immediately to the place you bought it. In this case retain packing.
- It is advisable to wait at least four hours before connecting the appliance to allow the oil to flow back in the compressor.
- Adequate air circulation should be around the appliance, lacking this leads to overheating. To achieve sufficient ventilation, follow the instructions relevant to installation.
- Wherever possible the back of the product should not be too close to a wall to avoid touching or catching warm parts (compressor, condenser) to prevent the risk of a fire, follow the instructions relevant to installation.
- The appliance must not be locate close to radiators or cookers.
- Make sure that the mains plug is accessible after the installation of the appliance.

Service

- Any electrical work required to do the servicing of the appliance should be carried out by qualified electrician or competent person.
- This product must be serviced by an authorized Service Center, and only genuine spare parts must be used.
  1)If the appliance is Frost Free.
  2)If the appliance contains freezer compartment.

Note: Children aged from 3 to 8 years are allowed to load and unload refrigerating appliances.(This clause applies only to the EU region.)

Installing your new appliance

Before using the appliance for the first time, you should be aware of the following tips.

Ventilation of appliance

In order to improve efficiency of the cooling system and save energy, it is necessary to maintain good ventilation around the appliance for the dissipation of heat. For this reason, sufficient clear space should be available around the refrigerator.

Suggest: It is advisable for there to be 50-70mm of space from the back to the wall, at least 100mm from its top, at least 100mm from its side to the wall and a clear space upfront to allow the freezer door to open 130° and the refrigerator door to open 115° See in follow diagrams. Please refer to the diagrams below.

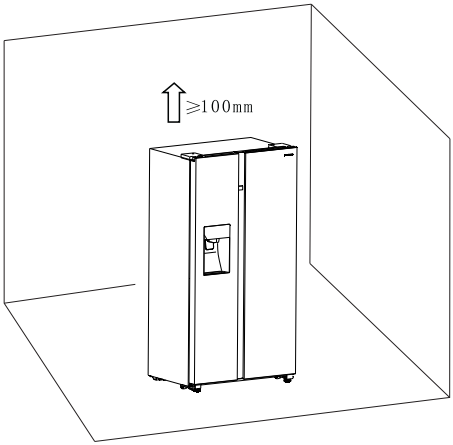

Relevant information (mm)

W	W1	W2	D	D1
908	194	252	600	1048

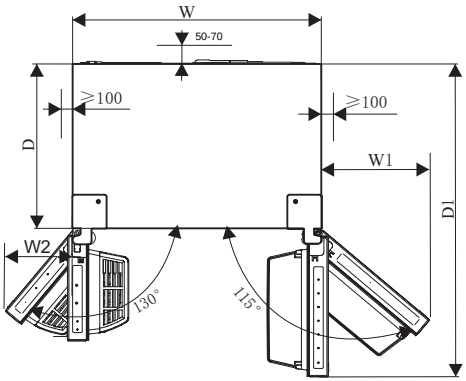

Note:

- This appliance performs well in the climate class from SN to T. It may not work properly if being left at a temperature above or below the indicated range for a long period.

Climate class	Ambient temperature
SN	+10°C to +32°C
N	+16°C to +32°C
ST	+16°C to +38°C
T	+16°C to +43°C

- Stand your appliance in a dry place to avoid high moisture damage.
- Keep the appliance out of direct sunlight, rain or frost. Stand the appliance away from heat sources such as stoves, fires or heaters.

Leveling of appliance

- For sufficient leveling and air circulating in the lower rear section of the appliance, the bottom feet may need to be adjusted. Please use a suitable spanner.
- To allow the doors to self-close, tilt back the top backwards at about 15mm or 0.5° by turning the adjustable feet.
- Whenever you want to move the appliance, remember to turn the feet back up, so that the appliance can roll freely. Reinstall the appliance when relocating.

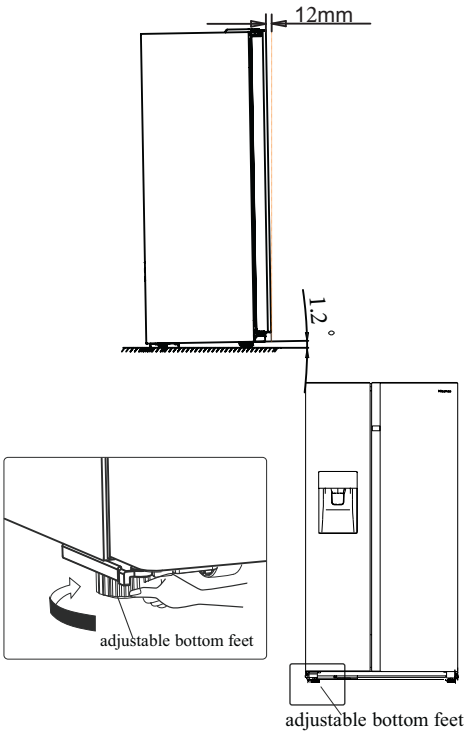

Warning!

For proper installation, this refrigerator must be placed on a level surface of hard material that is the same height as the rest of the flooring. This surface should be strong enough to support a fully loaded refrigerator.
The rollers, which are not castors, should be only used for forward or backward movement. Moving the refrigerator sideways may damage your floor and the rollers.

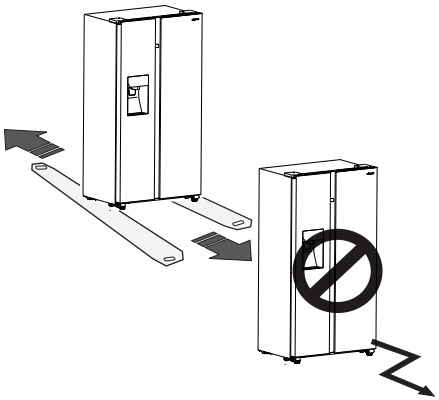

Description of the appliance

View of the appliance

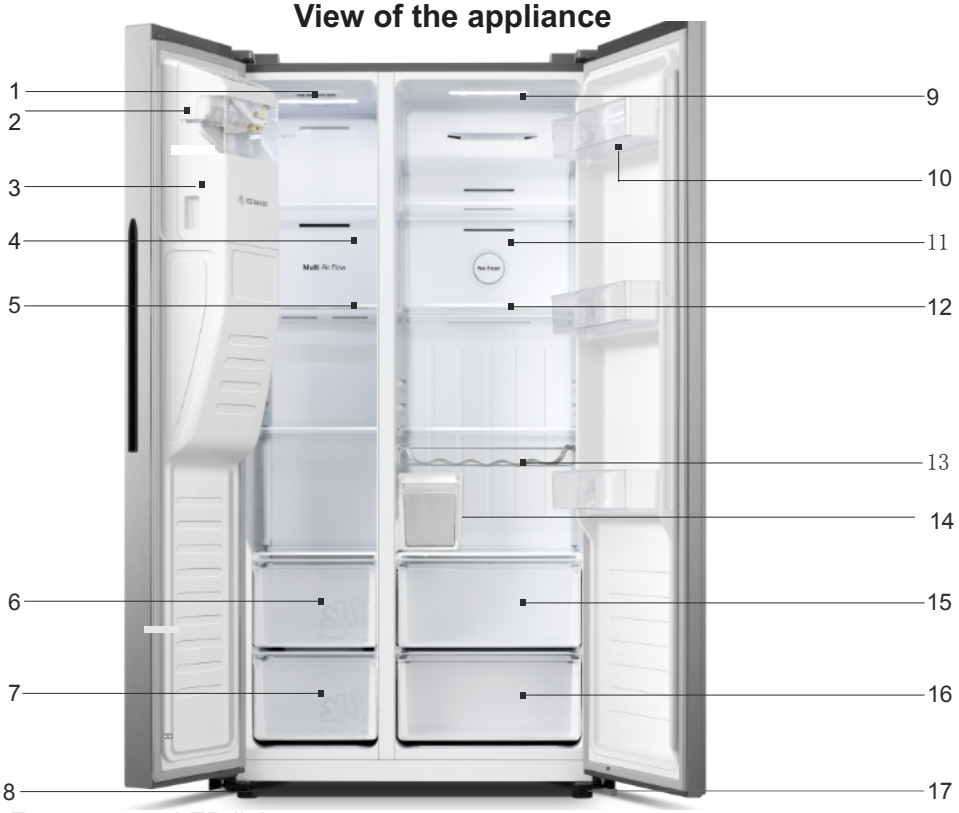

1. Freezer zone LED light
2. Ice-Maker Front Cover Assembly
3. Ice Bucket Assembly
4. Wind channel cover in freezer
5. Freezer shelf
6. Freezer upper drawer
7. Freezer lower drawer
8. Left adjustable bottom feet
9. Fridge zone LED light
10. Fridge door Rack
11. Wind channel cover in fridge
12. Fridge shelf
13. Bottle Rack
14. Water storage box part
15. Fridge upper drawer
16. Fridge lower drawer
17. Right adjustable bottom feet

Note: Due to constant development of our products, your refrigerator may be slightly different from this Instruction Manual, but its functions and usage remain the same.

Note:To get the best energy efficiency of this product, please place all shelves,drawers on their original position as the illustration above.

Display controls

Use your appliance according to the following control guidelines, your product has a control panel as shown in the diagram below.

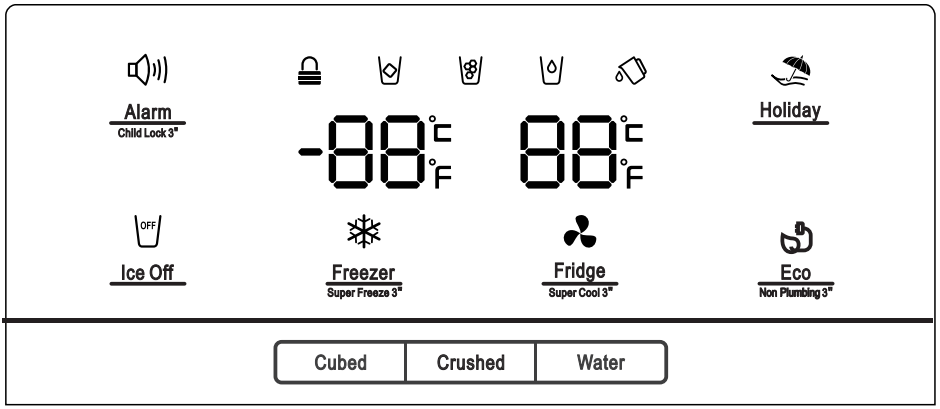

When the appliance is powered on for the first time, the backlighting of the icons on the display panel starts working. If no buttons have been touched and the doors are closed, the backlighting will turn off after 60 seconds.

The control panel consists of two areas about temperature, and one area about different modes.

Caution！ When you set a temperature, you set an average temperature for the whole refrigerator cabinet. Temperatures inside each compartment may vary from the temperatures displayed on the panel, depending on how much food you store and where you place it. High or low room temperature may also affect the actual temperature inside the appliance.

NOTE:High temperature setting will accelerate food waste.

For optimum food preservation, we recommend that when you start your refrigerator for the first time, the temperature for the refrigerator is set to 4° C , and the freezer to -18° C.



"Child Lock and Door Alarm"

This button serves two purposes:

1.Child Lock

Press and hold "Alarm" for 3 seconds to lock the all the Control Panel including dispenser function. If Control panel is locked, the icon "🔒" will be illuminated, and none of the buttonsontheControl Panelwork.

To unlock the Control Panel, please press and hold "Alarm" for 3 seconds again.

2.Door Alarm

In case of alarm, "🔊" icon will be on and a buzzing sound will be heard. Touch "Alarm" key to clear alarm then the "🔊" icon will turn off and the buzzing will stop.

When the door of fridge or freezer is open over 2 minutes, the door alarm will come on. In case of alarm, "🔊" icon will be on and will be buzzing sound. The buzzer will sound 3 times per minute and will stop after 10 minutes. Also it can be stoped by closing the door.

When Child Lock is off, and the doors are open, you can turn alarm off by touching "Alarm" .

To save energy, please avoid keeping doors open for along time when using refrigerator.



"Ice Control"

This button controls the ice maker.

You can touch "Ice Off" button to control the ice maker. When the Child Lock is off, and the ice function is on, you can touch the "Ice Off" icon to close the ice maker, and the icon " " will be illuminated. If you want to open the ice maker, please touch the "Ice Off" icon again, and the icon " " will be off.

Note: When the "Ice Off" is on, it only close the ice maker not the dispenser.



"Holiday"

If you are going to be away for a long period of time such as a long holiday or business trip, you can activate this function by touching the "Holiday" button, and the icon " " will be illuminated.

When the holiday function is activated, the temperature of the fridge is automatically switched to 15℃ and the freezer to -18℃ to minimize the energy consumption. The fridge temperature seting displays "—" and the freezer compartment remains on.

When the holiday function is on, you can switch off it by touching "Holiday" again, and the icon " " will be off. When the holiday function is on, the ice maker will automatically turn off. The refrigerator will retain the setting when powered off.

Note: Do not store any food in the fridge during the "Holiday" time, or it will quickly deteriorate.

Fridge Super Cool 3"

"Fridge temperature control"

You can touch the "Fridge" icon to activate the mode to control the fridge temperature. When you touch the button continuously, the temperature will be set in the following sequence.

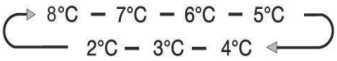

If you want to decrease the time needed to cool products in the Fridge, please touch and hold this button for 3 seconds, the super cool icon "" will be illuminated, the fridge temperature setting displays 2℃. Super cool automatically switches off after 3 hours, and the refrigerator temperature setting will revert back to the previous setting.

When super cool function is on, you can touch the "Fridge" to switch it off and it will revert to previous temperature setting. The fridge will not retain the Super Cool function when power off.

Note: On the Super Cool function, when you touch the "Holiday" or "Eco" button, "Holiday" or "Eco" function will be activated, and "Super Cool" mode will be off.

Freezer Super Freeze 3"

"Freezer temperature control"

You can touch the "Freezer" button to activate the mode to control the freezer temperature. When you press the button continuously, the temperature will be set in the following sequence.

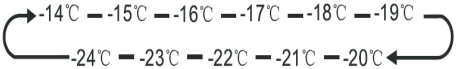

Press and hold the "Freezer" button for 3 seconds, the icon "❄ "will be illuminated, the freezer temperature setting displays -24℃.

Super Freezer can quickly lower the temperature and freeze your food faster than usual. This can retain more of the vitamins and nutrition in fresh food and keep your food longer.

The super freeze option allows you to freeze the maximum amount of possible. We recommend that you let the appliance operates at least 24 hours first. Super freeze automatically switches off after 52 hours, and the freezer temperature setting will revert back to the previous setting.

When the super freeze function is on, you can touch "Freezer" for to switch off the Super Freeze function, and it will revert to previous temperature setting. And it will not retain the Super Freeze function when power off.

Note: On the Super Freezer function, when you touch the "Holiday" or "Eco" button, "Holiday" or "Eco" function will be activated, and "Super Freezer" mode will be off.

"Dispenser control"

When the freezer door is opened or the Child Lock is on, the dispenser will not work.

The Ice Type button includes "Cubed" and "Crushed" options.

You can press the "Cubed" or "Crushed" option to choose the type of Ice to be dispensed. You can touch the "Water" button to activate the water mode.
When you touch the Ice Type button, the cubed or crushed ice mode which you choose will be activated, and the Cubed “ ” or Crushed “ ” ice icon lights up.

If you don’t need ice, turn the function off to save on water and energy consumption.(See Ice Off above.)
If you need water, please touch the “Water” button, and the water icon “ ” will light up. The mode is then set.

“Water storage box Alarm”

If the water storage box part is not correctly installed or not installed, the water storage box alarm will come on for reminding users. You can clear the alarm by holding "Eco" button for 3 seconds.

Note!

- If water is not dispensed or dispensing slowly, you need to check whether the water storage box part is correctly installed or not and make sure there is enough water in the water storage box .
- When you touching the "water" button for water, the water pump will start to draw, there is little nosie when the water pump working, it is normal.

Eco “Energy Save”

You can touch this button to turn Energy Saver mode on and off .
When you turn Energy Save on, the Energy Save icon “ ” lights.
The temperature of the fridge is automatically switched to 6℃ and the freezer to -17℃. If Energy Save is off and the icon goes off.

Note!

- The control panel will light up when the door is open or you touch any button.
- The light will go off without touching any button or the doors have been closed for one minutes.
- When the refrigerator is powered on, all the icons of the control panel will light up for 3 seconds, and a buzzer sounds. The Child Lock is off. And the temperature setting reverts back to the previous setting.

Using your appliance

This section tells you how to use most of the useful features. We recommend that you read through them carefully before using the appliance.

1. Adjust the door

When you found the doors are not at the same level, you can use a screwdriver to adjust the fridge door.

Only the fridge door can be adjusted.

When the freezer door is higher than the fridge door. First, you can use the spanner to turn the bolt anticlockwise on the lower hinge that can raise the fridge door. Once in position use the spanner to lock the nut.

When the freezer door is lower than the fridge door. You should use the spanner to turn the bolt clockwise to make the fridge door go down. Once in position lock in place.

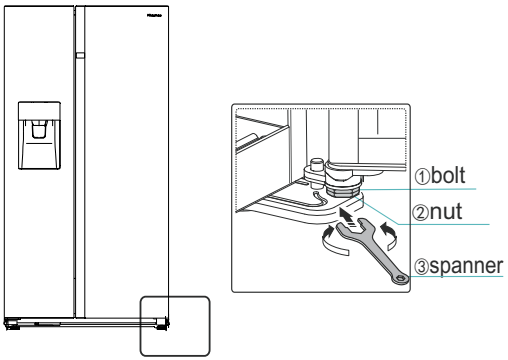

2. Using your refrigerator compartment

The refrigerator compartment is suitable for storage of vegetables and fruit. Food inside should be packed to store in order to avoid losing moisture or flavor permeating into other foods.

Caution! Never close the refrigerator door while the shelves, crisper and/or telescopic slides are extended. It may damage both them and the refrigerator.

Glass shelves and Door racks

The refrigerator compartment is provided with several glass shelves and several different door racks, which are suitable for the storage of eggs, canned liquid, bottled drinks and packed food. They can be placed a different heights according to your need. But do not place too many heavy things in racks. Before you lift up the door shelf vertically, please take the food out.

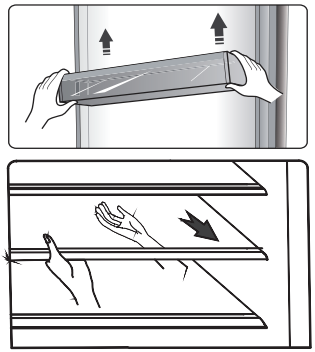

Note: The door racks and shelves can be taken out to be cleaned.

When you remove the shelves, gently pull them forward until the shelf comes clear of the shelf guides. When you return the shelves, make sure there is no obstacle behind and gently push the shelf back into the position.

Bottle rack

It is for storing bottled wine or drinks.
Note:Please use gently when you removed the bottled wine or drinks. The shelf can be taken out to be cleared or you can adjust to save the shelf space.

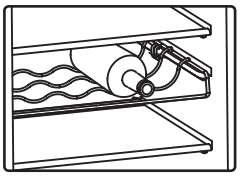

Water storage box

It is for providing water for ice maker and water dispenser. You can inpouring water into the water storage box by following steps:

① Pull out the water storage box

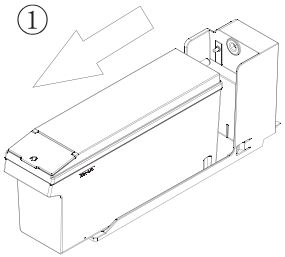

② Lift the front small cover,and then inpouring directly

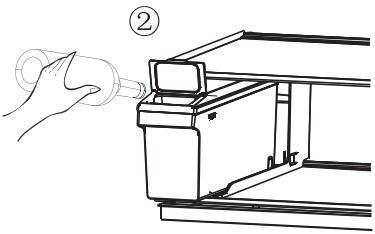

③ Refiting the water storage box on the fridge shelf

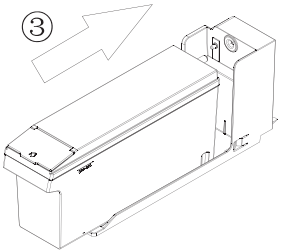

Caution:
When the water storage box needs to be refilled,please pull out the water storage box and insert it correctly to the operation malfunction.
The suggested water volume is not more than 4.5L.
After re-installation of the water storage box, please wait for 10 seconds to get the first water supply.
Only fill WATER into the box.
SODA,JUICE,MILK,ALCOHOL, etc…,are not allowed

Drawers

These are suitable for storage of fruits and vegetable. And it can be taken out to be cleaned.

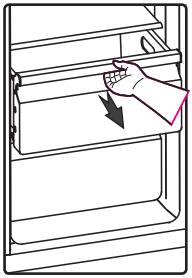

3. **Using your freezer compartment**

The freezer compartment is suitable for storage of foods required to be frozen, such as meat, fish, ice cream and other perishable items.

Caution! Ensure that bottles are not left in the freezer for longer than needed as freezing may cause the bottle break.

Bottled or canned liquid are at risk of exploding caused by volume expansion and so should not be stored in the freezer compartment.

4. Using the dispenser

You can choose the type of ice or water by touching the “Cubed” or “Crushed” or “Water” button.

When you choose ice type, push the dispenser gently with your cup. Ice will be released from the dispenser.

Make sure the cup is in line with the dispenser, and the ice exactly fall into the cup.

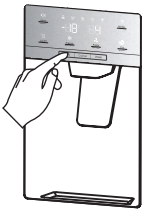



Note:

- If you select Cubed Ice after using the Crushed Ice feature, a small amount of residual crushed ice might fall into your cup.
- Do not immediately removing your cup or glass from under the dispenser after dispensing water or ice you need. You should be wait for 2 or 3 seconds to prevent spills.
- Do not pull the lever out as this could damage or break the lever’s spring.
- Do not dispense ice continually more than one minute during normal use to avoid the excessive temperature on the ice crusher motor.
- The dispensed water is cool, not icy cold. When you want colder water with ice, dispense ice to your glass first, then fill with water from the dispenser.

5. Using the Ice Bucket

If you want to remove the Ice Bucket: Please hold the handle as shown in the figure below. Then lift up and pull the Ice Bucket out slowly to prevent damage.

Removing Steps:

①Lift up the Ice Bucket

②Pull the Ice Bucket out slowly

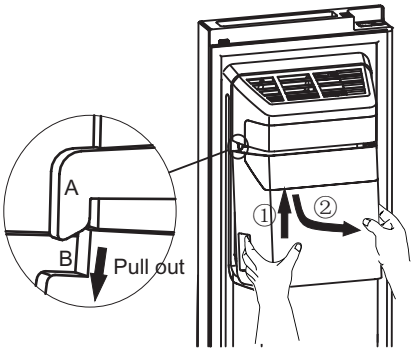

When you put it back, please make sure the two side(B&B') of Ice Bucket is wedged into the buckles(A&A').

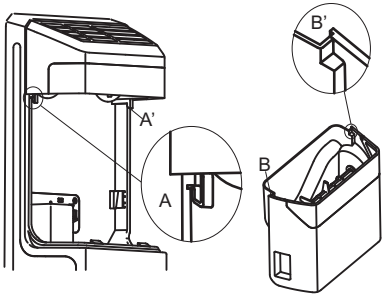

Installing Steps:

①Push the Ice Bucket up, and make the two side(B&B') of Ice Bucket wedge into the buckles(A&A').

②Pull the Ice Bucket down, and make sure the Ice Bucket is held the bracket firmly.

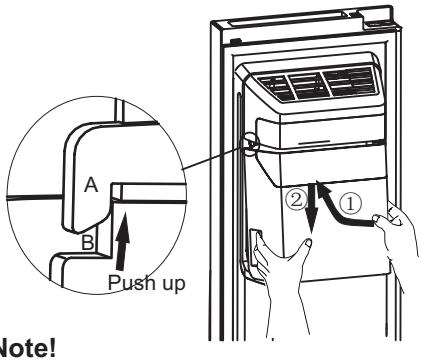

Note!

- When the ice maker dumps ice into the bucket, any sounds you hear are part of normal operation.
- If you do not dispense ice for a long periods of time, Ice may clump in the Ice Bucket. If this occurs, please remove all the ice and empty the bucket.
- If the refrigerator has been power-off too long,the ice in the bucket will melt ,and the water will flow out of the refrigerator to the floor.To avoid this,you should remove all the ice in the bucket .
- If ice doesn't come out, please check for any ice stuck in the chute and remove it. Or pull out the Ice Bucket and check for any ice cubes clump, then remove them.

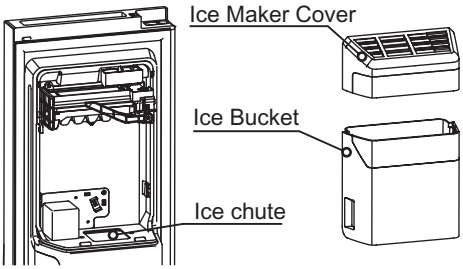

● The first batch of ice cubes after installation may be small, because air has entered the water line. Any air will be purged during normal use. If the ice cubes is still small, please check the water is circulated in line, or water valve is opened large enough, or the water is at a high pressure properly.

● To clean the Ice Bucket, wash with a mild detergent, rinse well, and dry thoroughly it. Do not use harsh or abrasive cleaners or solvents.

● Before replacing back the Ice Bucket, please check the two couplers are at a suitable angle to connect correctly. If not, please turn the Ice bucket coupler to the right angle to match the motor coupler.

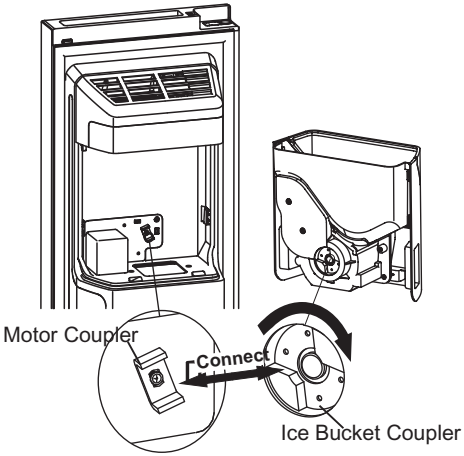

● If you want more space to store foods, you can replace the Ice Bucket with the storage box. The “Ice Off” should be set on to make sure that the ice maker is off.

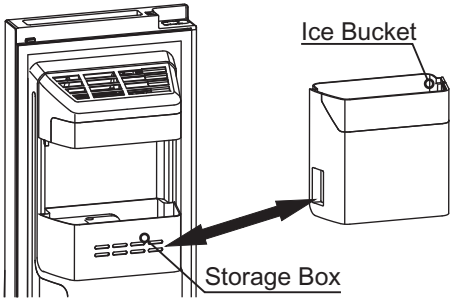

Warning!

● Do not put your fingers, hands, or any other unsuitable objects in the ice chute or ice bucket. This can cause personal injury or material damage.

● Do not allow your children to hang off the dispenser or pluck the ice storage bin. This could cause injury.

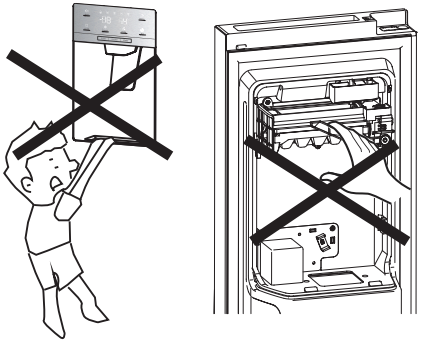

● There is a water line connection between ice maker and water storage box, don't disassemble the whole water supply system by yourself. It is recommended that suitably qualified person to do this..

● Do not use excessive force to open or close the door, or the water may spill out off the ice maker.

Cleaning and care

For hygienic reasons the appliance (including exterior and interior accessories) should be cleaned regularly (at least every two months).

Warning!

The appliance must not be connected to the mains during cleaning. Danger of electrical shock! Before cleaning switch the appliance off and remove the plug from the mains socket.

Exterior cleaning

To maintain good appearance of your appliance, you should clean it regularly.

- Wipe the digital panel and display panel with a clean, soft cloth.
- Spray water onto the cleaning cloth instead of spraying directly on the surface of the appliance. This helps ensure an even distribution of moisture to the surface.
- Clean the doors, handles and cabinet surfaces with a mild detergent and then wiped dry with a soft cloth.

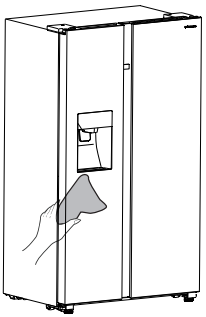

Warning!

- Do not use sharp objects as they are likely to scratch the surface.
- Do not use Thinner, Car detergent, Clorox, ethereal oil, abrasive cleansers or organic solvent such as Benzene for cleaning. They may damage the surface of the appliance and may cause fire.

Interior cleaning

You should clean the appliance interior regularly. It will be easier to clean when food stocks are low. You can remove the drawers and shelves for a more thorough clean. Wipe the inside of the freezer with a weak solution of bicarbonate of soda, and then rinse with warm water using a wrung-out sponge or cloth. Wipe completely dry before replacing the shelves and baskets.
Thoroughly dry all surfaces and removable parts before putting them back into place.

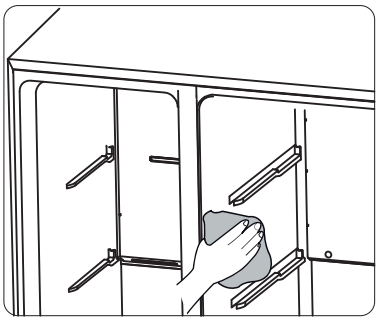

Water storage box cleaning

You should clean the water storage box regularly. You can remove the water storage box along horizontal outward, and then disassemble the cover of box. Wipe the inside of the box and cover with a weaksolution of bicarbonate of soda, and then rinse with warm water using a wrung-out sponge or cloth, clean it with directly drinking water again. Thoroughly dry all surfaces and removable parts before putting them back into place. You can assemble the water storage box along horizontal forward when you finish cleaning.

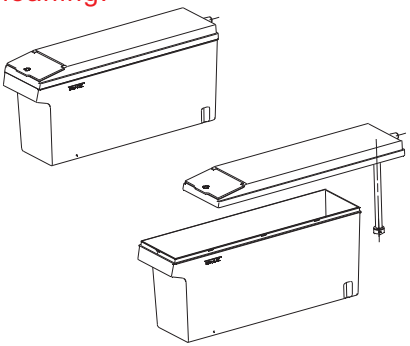

Although this appliance automatically defrosts, a layer of frost may occur on the freezer compartment's interior walls if the freezer door is opened frequently or kept open too long. If the frost is too thick, choose a time when the freezer is nearly empty and proceed as follow:

1. Remove existing food and accessories baskets, unplug the appliance from the mains power and leave the doors open. Ventilate the room thoroughly to accelerate the process.
2. When defrosting is completed, clean your freezer as described above.

Warning!

Do not use sharp objects to remove frost from the freezer compartment. Only after the interior is completely dry should the appliance be switched back on and plugged back into the mains socket.

Door seals cleaning

Take care to keep door seals clean. Sticky food and drinks can cause seals to stick to the cabinet and tear when you open the door. Wash the seals with a mild detergent and warm water. Rinse and dry them thoroughly after cleaning.

Warning!

Only after the door seals are completely dry should the appliance be powered on.

Replacing the LED light

Warning: The LED light must be replaced by a competent person. If the LED light is damaged, follow the steps below:

1. Unplug your appliance.
2. Remove light cover by rising up and puling out the LED light.
3. Hold the LED light with one hand and pull it with the other hand while pressing the connector latch.
4.Replace LED light and snap it correctly in place and recover the light cover.

Helpful hints and tips

Energy saving tips

We recommend that you follow the tips to save energy.

- Try to avoid keeping the door open for long periods in order to conserve energy.
- Ensure the appliance is away from any sources of heat (Direct sunlight, electric oven or cooker etc.)
- Don't set the temperature colder than necessary.
- Don't store warm food or evaporating liquid in the appliance.
- Place the appliance in a well ventilated, humidity free room. Please refer to the installing your new appliance chapter.
- The description of appliance diagram shows the correct combination for the drawers, crisper and shelves, do not adjust the combination as this is designed to be the most energy efficient configuration.

Hints for fresh food refrigeration

- Do not place hot food directly into the refrigerator or freezer, the internal temperature will increase resulting in the compressor having to work harder and will consume more energy.
- Do cover or wrap the food, particularly if it has a strong flavor.
- Place food properly so that air can circulate freely around it.

Hints for refrigeration

- Meat (All Types) Wrap in polythene food: wrap and place on the glass shelf above the vegetable drawer. Always follow food storage times and use by dates suggested by manufacturers.
- Cooked food, cold dishes, etc.: They should be covered and may be placed on any shelf.
- Fruit and vegetables: They should be stored in the special drawer provided.
- Butter and cheese: Should be wrapped in airtight foil or plastic film wrap.
- Milk bottles: Should have a lid and be stored in the door racks.

Hints for freezing

- When first starting-up or after a period out of use, let the appliance run at least 2 hours on the higher settings before putting food in the compartment.
- Prepare food in small portions to enable it to be rapidly and completely frozen and make it possible to subsequently thaw only the quantity required.
- Wrap up the food in aluminum foil or polyethylene food wraps which are airtight.
- Do not allow fresh, unfrozen food to touch the food which is already frozen to avoid patrial defrosting.

● It is recommended to label and date each frozen package in order to keep track of the storage time.

Hints for the storage of frozen food

● Ensure that frozen food has been stored correctly by the food retailer
● Once defrosted, food will deteriorate rapidly and should not be re-frozen. Do not exceed the storage period indicated by the food manufacturer.

Switching off your appliance

If the appliance needs to be switched off for an extended period, the following steps should be taken to prevent mould on the appliance.
1. Remove all food.
2. Remove the power plug from the mains socket.
3. Clean and dry the interior thoroughly.
4. Ensure that all the doors are wedged open slightly to allow air to circulate.

Troubleshooting

If you experience a problem with your appliance or are concerned that the appliance is not functioning correctly, you can carry out some easy checks before calling for service, please see below. You can carry out some easy checks according to this section before calling for service.

Warning! Don't try to repair the appliance yourself. If the problem persists after you have made the checks mentioned below, contact a qualified electrician, authorized service engineer or the shop where you purchased the product.

Problem	**Possible cause & Solution**
Appliance is not working correctly	Check whether the power cord is plugged into the power outlet properly.
	Check the fuse or circuit of your power supply, replace if necessary.
	The ambient temperature is too low. Try setting the chamber temperature to a colder level to solve this problem.
	It is normal that the freezer is not operating during the automatic defrost cycle, or for a short time after the appliance is switched on to protect the compressor.
Odours from the compartments	The interior may need to be cleaned.
	Some food, containers or wrapping cause odours.
Noise from the appliance	The sounds below are quite normal: ● Compressor running noises. ● Air movement noise from the small fan motor in the freezer compartment or other compartments. ● Gurgling sound similar to water boiling. ● Popping noise during automatic defrosting. ● Clicking noise before the compressor starts.
	Other unusual noises are due to the reasons below and may need you to check and take action: The cabinet is not level. The back of appliance touches the wall. Bottles or containers knocking against each other.

	It is normal to frequently hear the sound of the motor, it will need to run more during following circumstances:
The motor runs continuously	• Temperature setting is set colder than necessary. • Large quantity of warm food has recently been stored within the appliance. • The temperature outside the appliance is too high. • Doors are kept open too long or too often. • After your installing the appliance or it has been switched off for a long time.
A layer of frost occurs in the compartment	Check that the air outlets are not blocked by food and ensure food is placed within the appliance to allow sufficient ventilation. Ensure the door can be fully closed. To remove the frost, please refer to the cleaning and care chapter.
Temperature inside is too warm	You may have left the doors open too long or too frequently; or the doors are kept open by some obstacle; or the appliance is located with insufficient clearance at the sides, back and top.
Temperature inside is too cold	Increase the temperature by following the"Display controls" chapter.
Doors can't be closed easily	Check whether the top of the refrigerator is tilted back by 10-15mm to allow the doors to self close, or if something inside is preventing the doors from closing.
Water drips on the floor	The water pan (located at the rear bottom of the cabinet) may not be properly leveled, or the draining spout under neath the top of the compressor depot may not be properly positioned to direct water into this pan, or the water spout is blocked. You may need to pull the refrigerator away from the wall to check the pan and spout. Check if the refrigerator is power-off for a long time, this may cause the ice in the bucket to melt into water, and flow to the floor .
The light is not working	• The LED light may be damaged. Refer to replace LED lights in cleaning and care chapter. • The control system has disabled the lights due to the door being kept open too long, close and reopen the door to reactivate the lights.
Ice is not dispensing	• Did you wait for 10 hours after installation of the water supply line before making ice? if it is not sufficiently cool, it may take longer to make ice, such as when first installed. • **Is the water storage box installed accurately? Make sure there is enough water in the water storage box.**. • Did you manually stop the ice making function? Make sure you

	have set the Cubed or Crushed mode on. • Is there any ice blocked within the ice maker bucket or ice chute? • Is the freezer temperature too warm? Try setting the freezer temperature lower.
Water dispenser is not functioning	• Is the water storage box installed accurately? Make sure there is enough water in the water storage box. • Is water line broke or bent? Make sure the water line is unblocked and clear of any obstruction. • Is the water storage box frozen for the refrigerator temperature is too low? Try selecting a warmer setting on the display panel. • Is the water pump working?
You can hear water bubbling in the refrigerator	• This is normal. The bubbling comes from the refrigerant coolant liquid circulating through the refrigerator.

Disposal of the appliance

It is prohibited to dispose of this appliance as household waste.

Packaging materials

Packaging materials with the recycle symbol are recyclable. Dispose of the packaging into a suitable waste collection container to recycle it.

Before disposal of the appliance

1. Pull out the mains plug from the mains socket.
2. Cut off the power cord and discard with the mains plug

Warning! Refrigerators contain refrigerant and gases in the insulation. Refrigerant and gases must be disposed of professionally as they may cause eye injuries or ignition. Ensure that tubing of the refrigerant circuit is not damage prior to proper disposal.

	Correct Disposal of this product
	This marking indicates that this product should not be disposed with other household wastes throughout the EU. To prevent possible harm to the environment or human health from uncontrolled waste disposal, recycle it responsibly to promote the sustainable reuse of material resources. To return your used device, please use the return and collection systems or contact the retailer where the product was purchased. They can take this product for environmental safe recycling.

To avoid contamination of food, please respect the following instructions
- Opening the door for long periods can cause a significant increase of the temperature in the compartments of the appliance.
- Clean regularly surfaces that can come in contact with food and accessible drainage systems.
- Store raw meat and fish in suitable containers in the refrigerator, so that it is not in contact with or drip onto other food.
- Two-star frozen-food compartments are suitable for storing pre-frozen food, storing or making icecream and making ice cubes.
- One-, two- and three-star compartments are not suitable for the freezing of fresh food.

Order	Compartments TYPE	Target storage temp.[℃]	Appropriate food
1	Fridge	+2～ +8	Eggs, cooked food, packaged food, fruits and vegetables, dairy products, cakes, Drinks and other foods which are not suitable for freezing.
2	(***)*-Freezer	≤-18	Seafood (fish, shrimp, shellfish), freshwater aquatic products and meat products (recommended time is 3 months – nutrition values and taste decrease with time), suitable for frozen fresh food.
3	***-Freezer	≤-18	Seafood (fish, shrimp, shellfish), freshwater aquatic products and meat products (recommended time is 3 months – nutrition values and taste decrease with time). Not suitable for freeing fresh food.
4	**-Freezer	≤-12	Seafood (fish, shrimp, shellfish), freshwater aquatic products and meat products (recommended time is 2 months – nutrition values and taste decrease with time). Not suitable for freeing fresh food.
5	*-Freezer	≤-6	Seafood (fish, shrimp, shellfish), freshwater aquatic products and meat products (recommended time is 1 month – nutrition values and taste decrease with time). Not suitable for freeing fresh food.
6	0-star	-6～0	Fresh pork, beef, fish, chicken, some packaged processed foods, etc. (Recommended to eat within the same day, preferably not later than 3 days) . Partially packed/wrapped up encapsulated processed foods (non-freezable foods)
7	Chill	-2～+3	Fresh/frozen pork, beef, chicken, freshwater aquatic products, etc.(7 days below 0 ℃ and above 0 ℃ is recommended for consumption within that day, preferably no more than 2 days). Seafood (less than 0 for 15 days, it is not recommended to store above 0 ℃)

8	Fresh Food	0～+4	Fresh pork, beef, fish, chicken, cooked food, etc. (Recommended to eat within the same day, preferably no more than 3 days)
9	Wine	+5～+20	red wine,white wine,sparkling wine etc.

Note: please store different foods according to the compartments or target storage temperature of your purchased products.

- If the refrigerating appliance is left empty for long periods, switch off, defrost, clean, dry, and leave the door open to prevent mould developing within the appliance.

Water dispenser cleaning (special for water dispenser products):

- Clean water tanks if they have not been used for 48 h; flush the water system connected to a water supply if water has not been drawn for 5 days.

WARNING! Food needs to be packed in bags before putting into the refrigerator, and liquids need to be packed in bottles or capped containers to avoid the problem that the product design structure is not easy to clean.

Fridgemaster Technical Helpline and Service Centre -Telephone

0191 387 0804

fridgemaster

FRIDGEMASTER
Unit 2 Meadow Court
Millshaw Lane Leeds,
West Yorkshire,
LS11 8LZ,
United Kingdom

For further information please contact the Fridgemaster Technical Helpline on:
0191 387 0804

Fridgemaster@0800repair.com



This symbol on the product or in the instructions means that your electrical and electronic equipment should be disposed at the end of its life separately from your household waste. There are separate collection systems for recycling in the EU.
For more information, please contact the local authority or your retailer where you purchased the product.

CE