SHARP

Refrigerator - Freezer
Operation manual

原裝進口電冰箱
使用説明書

SJ-FX660W-CG
SJ-FX660W-BK
SJ-FX660W-RD
SJ-FX660S2-BK

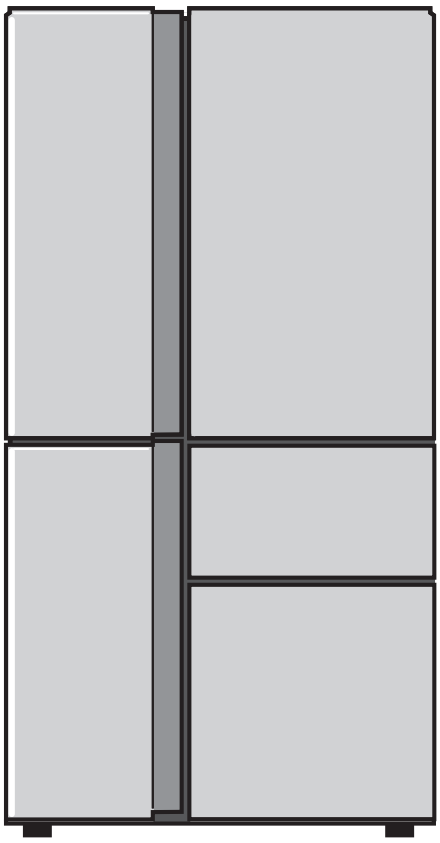

NON·CFC

Refrigerant: R600a
Insulation blowing gas: Cyclopentane

冷媒種類 : R600a
絶緣發泡材主要成份 : 環戊烷

Plasmacluster

"Plasmacluster" and "Device of a cluster of grapes" are trademarks of Sharp Corporation.

Contents

- **Safety information** 2
- **Installation**. 4
- **Description** 5
- **Storing food** 6
- **Control panel** 7
- **Main modes**. 8
- **Multi temperature room** 11
- **Additional settings** 13
- **Automatic ice maker** 15
- **Water dispenser** 18
- **Care and cleaning**. 20
- **Before you call for service**. 21

目錄

- 安全注意事項 23
- 安裝 25
- 各部位名稱 26
- 食品的儲存 27
- 控制面板 28
- 主要模式 29
- 變温室 32
- 其他設定 34
- 自動製冰機 36
- 飲水機 39
- 保養 41
- 送修之前的初步檢查 42

Thank you very much for buying this SHARP product. Before using your SHARP refrigerator, please read this operation manual to ensure that you gain the maximum benefit from it.

- This refrigerator is intended for making ice cubes, refrigerating and freezing food.
- This refrigerator is for household use only, with ambient temperature indicated in the table. The climate class is specified on the rating plate.
  The refrigerator is fully functional at the ambient temperature range of the indicated climate class. If the refrigerator is used at colder temperatures, the refrigerator will not be damaged up to a temperature of +5°C.
- The refrigerator should not be subjected to temperatures of -10°C or below for a long period of time.

Household use only

Climate class	Acceptable range of ambient temperature
SN	+10°C to 32°C
N	+16°C to 32°C
ST	+16°C to 38°C
T	+16°C to 43°C

Safety information

⚠	**Warning**	This means that there are high risks of death or serious injury.
⚠	**Caution**	This means that there are high risks of material damage or personal injury.
⚠	**Caution**	Fire marks means this refrigerator has risk of fire accident.

⚠ Warning

Refrigerant

This refrigerator contains flammable refrigerant (R600a: isobutane) and insulation blowing gas (cyclopentane). Observe the following rules to prevent ignition and explosion.

- Do not damage the refrigerant circuit.
- Do not allow any pointed objects to have contact with the refrigeration system. The refrigeration system behind and inside the refrigerator contains refrigerant.
- Do not use mechanical devices or other means to accelerate the defrosting process. (This refrigerator has adopted automatic defrosting system.)
- Do not use electrical appliances inside the refrigerator.
- Do not block the space around the refrigerator.
- Do not use flammable sprays, such as spray paint near the refrigerator.
- Do not store flammable sprays, such as spray paint in the refrigerator.
- In the case of failure of the refrigeration system, do not touch the wall socket and use open flames.
  Open the window and let out the air from the room. Then ask a service agent approved by SHARP for service.

Power cord, Plug, Socket

Read carefully the following rules to prevent electric shock or fire.

- Make sure to protect the power cord from being damaged during installation or moving. If the power plug or cord is loose, do not insert the power plug.
- Do not place multiple portable socket-outlets or portable power supplies at the rear of the refrigerator.
- Connect the power plug into the wall socket firmly and directly. Do not use an extension cord or adapter plug.
- Connect the power plug to the socket with the required rated voltage.
- Connect the earth pin to the earth terminal properly.
- Do not touch the power plug with wet hands.
- Disconnect from the main electricity supply by removing the main plug from the socket.
  Do not remove by pulling the power cord.
- Dust deposited on the power plug may cause fire.
  Wipe it off carefully.
- Pull out the plug if the refrigerator is not used for a long time.
- If the flexible supply cord is damaged, it must be replaced by service agent approved by SHARP in order to avoid a hazard.

Installation

- Do not install the refrigerator in a damp or wet location. It may cause the damage to the insulation or electrical leak. Dew may also appear on the outer cabinet and it causes rust.
- The refrigerator should be installed flatly and firmly on the floor.

In use

- Do not store volatile and flammable materials such as ether, petrol, propane gas, aerosol cans, adhesive agents and pure alcohol etc. These materials are easy to explode.
- Do not store temperature-sensitive products such as pharmaceutical products in the refrigerator.
  There are high risks of changes in product quality .
- Do not attempt to change or modify this refrigerator. This may result in fire, electric shock or injury.
- Do not place any object on the top of refrigerator.
  If the object falls down from the top, it may cause injury.
- Do not touch the machinery parts (upper section of the ice storage box) of the automatic ice maker. Bodily injury may occur as result when the ice tray turns.
- Do not hit the glass doors hard.
  (Only for SJ-FX660W)
  Otherwise, they may break and cause physical injury.
- Do not touch the dispenser door when it is rotating. If you catch your fingers in the door, it may cause injury.
  (Only for SJ-FX660W)
- This appliance can be used by children aged from 8 years or above and persons with reduced physical, sensory or mental capabilities or lack of experience and knowledge if they have been given supervision or instruction concerning use of the appliance in a safe way or understanding the hazards involved. Children shall not play with the appliance. Cleaning and user maintenance shall not be done by children without supervision.

Safety information

Care and Cleaning

- Unplug the refrigerator first to prevent electric shock.
- Do not splash water directly on the outer cabinet or the interior. This may lead to rusting and deterioration of the electrical insulation.

Trouble

- If you smell something burning, pull out the power plug immediately. Then ask a service agent approved by SHARP for service.
- In case of gas leak, ventilate the area by opening window. Do not touch the refrigerator or the power socket.

Disposal

- Ensure that the refrigerator presents no danger to children while being stored until disposal. (e.g. remove the magnetic door seals to prevent child entrapment.)
- This refrigerator should be disposed appropriately. Take the refrigerator to a professional recycling plant for flammable refrigerant and insulation blowing gases.

⚠ Caution

Transportation

- When you install or move your refrigerator, use curing mat to protect the floor from being damaged.
- Carry the refrigerator by holding the handles located on the rear and bottom side. If you lift up the refrigerator improperly, it may cause injury.

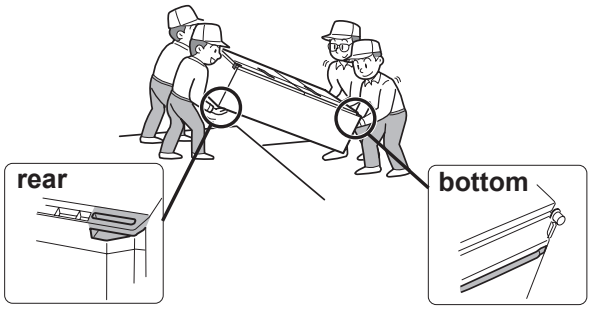

In use

- Do not touch food or metal containers in the freezer compartment with wet hands. This may cause frostbite. It is exactly the same when multi temperature room is set at -8°C or -18°C.
- Do not place bottled drinks and cans in the freezer compartment.
  It is exactly the same when multi temperature room is set at -8°C or -18°C.
- Do not use other than potable water to make ice cubes.
- Do not open or close the door when somebody put a hand near the door. There is a risk that the other people may catch their fingers in the door.
- Do not put oversized object in the pockets of the door. If the object falls down from the pockets, it may cause injury.
- Make sure to handle the glass shelves with care to install or uninstall. If you drop the glass shelves, it may break or cause injury.

Installation

Free standing type

1 Keep adequate ventilation space around the refrigerator.

- The picture shows the minimum required space for installing the refrigerator. The measurement condition of energy consumption is conducted under a different space dimension.

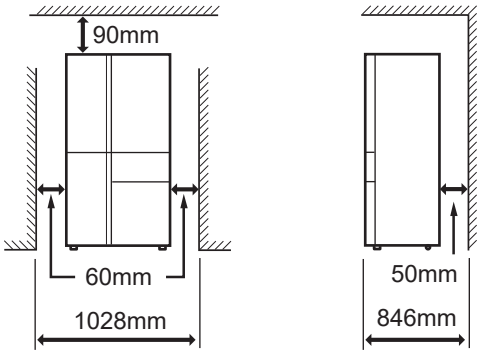

- By keeping greater space, the refrigerator may consume a less amount of power consumption.
- If use the refrigerator in the smaller space dimension than pictured above, it may cause temperature rise in the unit, loud noise and failure.

Overall space required in use

	SJ-FX660W	SJ-FX660S2
a	1440mm	1432mm
b	1330mm	1330mm

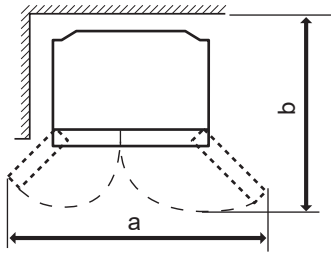

2 Use the two front the adjustable feet to place the refrigerator flatly and firmly on the floor.

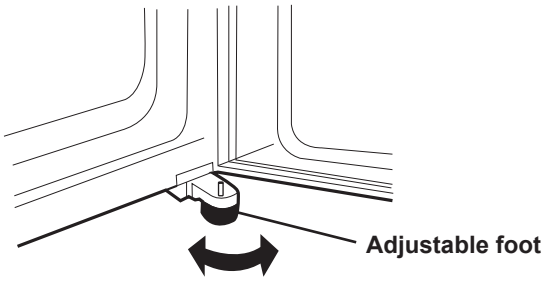

3 Use the adjustable feet when right and left doors are not properly aligned.

When the left door are raised.

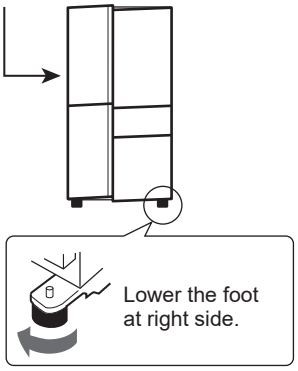

When the right door are raised.

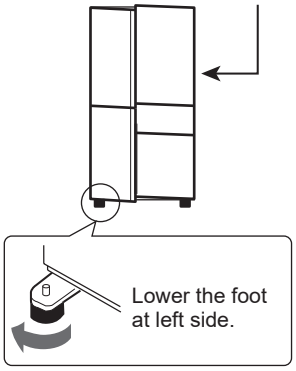

- Turn the adjustable feet until the opposite foot is slightly off from the ground.

4 Connect the appliance via a correctly installed socket.

Note

- Place your refrigerator to access the plug.
- Keep your refrigerator out of direct sunlight and do not place next to heat generating appliance.
- Do not place your refrigerator directly on the ground. Insert suitable stand such as wooden board under the refrigerator.
- When you insert the power plug with the door opened, door alarm sounds but it is normal. This sound stops after closing the door.
- Do not push the refrigerator against the wall. The wall surrounding the refrigerator may get dirty or discolored because of the air flow caused by heat radiation.

Four casters are located on the bottom of the refrigerator

- The casters allow the refrigerator to move back and forth.



Before using your refrigerator

- Clean the inside parts with a cloth soaked in warm water.
- If you use soapy water to clean, wipe it off thoroughly with water.

Description

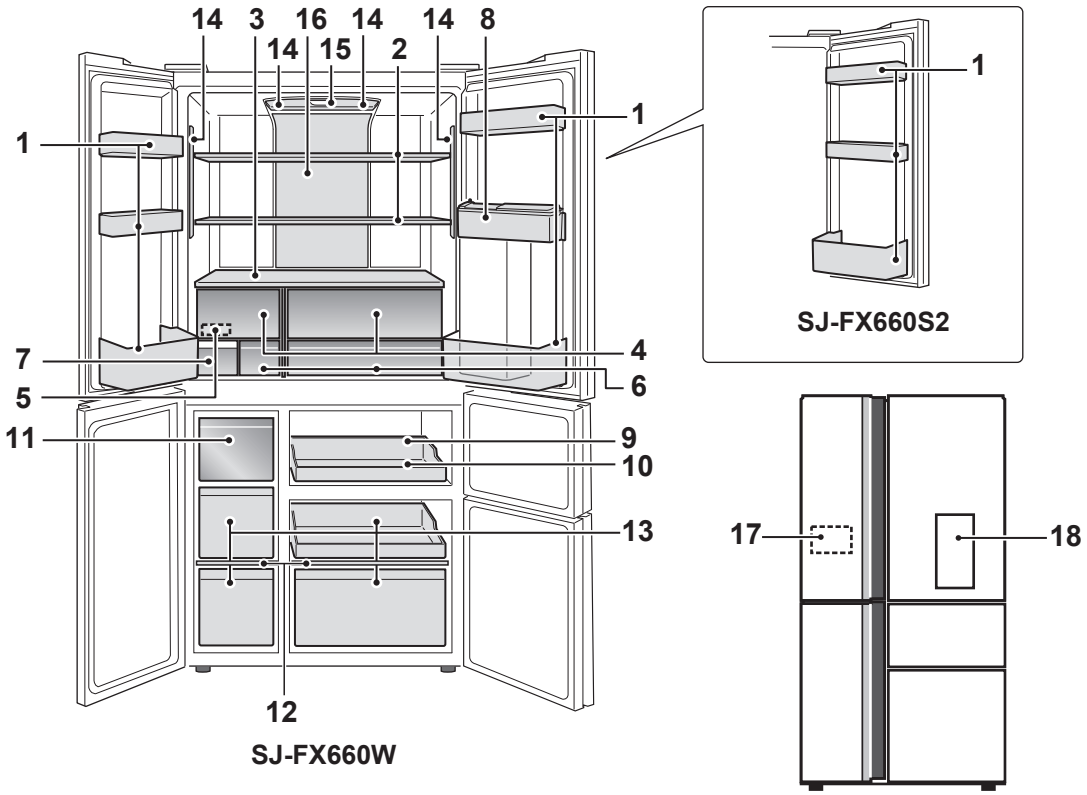

1. **Door pocket**
   (SJ-FX660W: **5 pcs**
   SJ-FX660S2 : **6 pcs**)
2. **Refrigerator shelf (2 pcs)**
3. **Fixed shelf**
4. **Vegetable case**
   Moisture cover is installed on the right side only.
   This cover works for storing food with high-moisture freshly.

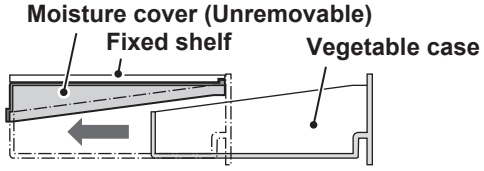

5. **Egg holder**
6. **Fresh case**
7. **Water tank (Ice maker)**
8. **Dispenser tank**
   < Only for SJ-FX660W >
9. **Case**
10. **Stainless steel tray**
11. **Ice storage box**
    To prevent damage to the ice storage box, do not make ice in the ice storage box or pour oil into it.
12. **Freezer shelf**
13. **Freezer case**
14. **Light**
15. **Plasmacluster indicator**
16. **Hybrid cooling panel**
    The panel cools the refrigerator compartment indirectly from the rear. In this way, food is cooled gently without being exposed to cold air flow.
17. **Control panel**
18. **Water dispenser**
    < Only for SJ-FX660W >

If you wish to store large items within your refrigerator

- You may remove any shelves or any pockets numbered 1,2,4,5,6,7,9,10,11,12,13 in the picture above.
- Cooling performance is not influenced even if you use the refrigerator in the above situation.

Door Alarm

- The door alarm sounds when the door* is left open.
- The door alarm sounds in 1 minute after opening the door and again after 1 minute (once in each case).
- If the door* is left open for approx. 3 minutes, the alarm sounds continuously.
- The alarm stops after closing all the door.

(* Only refrigerator door and left freezer door.)

Deodorizing unit

- Deodorizing catalyst is installed on the routes of cold air. No operation and cleaning are required.

ENGLISH

Storing food

- Ensure that the food is of the freshest possible quality to maximize the storage life of perishable food. The following is a general guide to help promote longer food storage.
- Food has a limited storage life. Make sure not to exceed use-by date indicated by manufacturer.

Refrigerator

Fruit / Vegetables

- Fruit and vegetables should be loosely enclosed in a plastic material e.g. wrap, bags (do not seal) and placed in the vegetable case to minimize moisture loss.
- Fruits and vegetables which are easily effected by low temperature should be stored in a cool place except for the refrigerator.

Dairy Products & Eggs

- Most dairy products have their best-before date on the outer packaging which informs the recommended temperature and storage life of the food.
- Eggs should be stored in the egg holder.

Meats / Fish / Poultry

- Place on a plate or a dish and cover with paper or plastic wrap.
- For larger cuts of meat, fish, or poultry, place to the rear of the shelves.
- Ensure all cooked food is wrapped securely or placed in an airtight container.

**** Notes for fresh food:***

- Fresh food (securely wrapped) should be stored in limited time to prevent spoilage and badly affecting other stored foods.

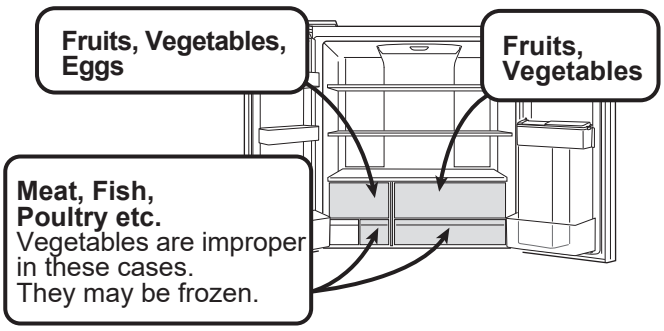

Freezer

- Freeze small quantities of food at a time in order to freeze them quickly.
- Food should be properly sealed or covered tightly.
- Place food in the freezer evenly.
- Label bags or containers to keep an inventory of freezing food.

Multi temperature room

You can choose from four kinds of temperature zones. See “Multi temperature room” about how to select the temperature zone.

Temperature zone	Mode	Storing food
3.0℃	**Refrigerating**	Drinks, Daily dish Dessert etc.
0.0℃	**Fresh**	Meat, Fish Daily product etc.
-8.0℃	**Soft freezing**	Meat, Fish etc.
-18.0℃	**Freezing**	Frozen food

Soft freezing

This mode is suitable for storing food without freezing solid. You may cut easily even if the food is big.
If the food is hard to cut, leave it for five to fifteen minutes on a cooking board then try again.
Please note that this mode is not designed for long-term storage of frozen food.
Stored food should be used within 1 week.

Advice for preventing dew or frost inside the refrigerator

- Keep the door securely closed. If the food falls down, it may cause a gap between the cabinet and the door. Move it back to the shelf or the pocket.
- Stored items should be packed or sealed with such as food containers or plastic wraps.

Advice for storing food

- Evenly place the food on the shelves to allow the cooling air to circulate efficiently.
- Hot food should be cooled before storing. Storing hot food increases the temperature in the unit and the risk of food spoilage.
- Opening the door for long periods can cause a significant increase of the temperature in the compartments of the appliance.
- Do not block the outlet and inlet of the cool air circulating circuit with food or containers; otherwise the food is not be evenly cooled throughout the refrigerator.
- Do not place food directly in front of cold air outlet. This may lead to the food freezing.

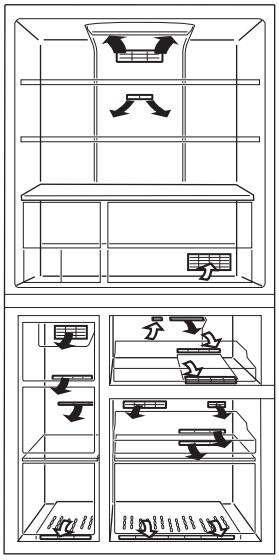

Control panel



Icons

All modes are “OFF” by a default setting.

Main modes

- **Energy saving**
- **Vacation mode**
- **Express Freezing**
- **Plasmacluster**
- **Ice making**
- **Ice tray cleaning**

Multi temperature room assisting modes

- **Express cool**
- **Extra cool**
- **Defrost food**
- **Cool down**

Additional settings

- **Water dispenser lock**
  < Only for SJ-FX660W >
- **Door alarm off**
- **Sound off**
- **Control panel lock**

At the time of re-power distribution

- When there is a power failure during the operation of express freezing or ice tray cleaning, the operation is stopped.
- See “Multi temperature room” about the assisting mode.
- The other settings are the same as before the power failure.

To light up the control panel

Press the enter key.

The control panel shows the preset temperature of each compartment and the operating icons.
(All icons do not turn on because all modes are “OFF” by a default setting.)

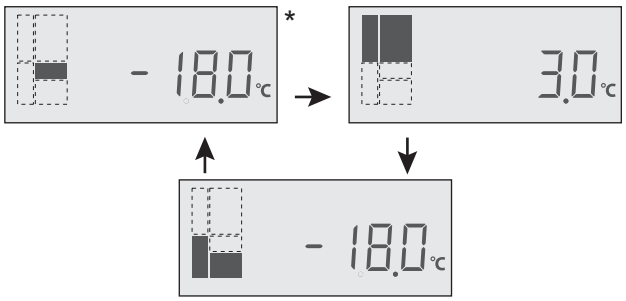

< Standby display >

* The temperature is not indicated on the display while one of assisting modes in operation.
  Temperature display changes variously.

Note

- Press the keys with your bare hand to operate. Operation with wet hand is invalid.
- Operation is not accepted while the door* is opened. (* Only refrigerator door.)
- When there is no operation for 1 minute, the display automatically returns to the standby display. Thus if there is no operation for another 1 minute the display turns off.
- Every time you open the door*, the control panel lights up to show the current setting.
  (* Only refrigerator door and left freezer door.)

ENGLISH

Main modes

Controlling temperature

- The refrigerator controls its temperature automatically. You can set the preset temperature as below.
- See “Multi temperature room” about the preset temperature of multi temperature room.

Refrigerator

- Default setting is 3°C.
- You can adjust between 0°C and 6°C in step of 1°C.

Procedure **Display**

1



Press enter key.

2



Select the compartment.

Current setting

The compartments change in the order shown as on the picture by pressing this key.

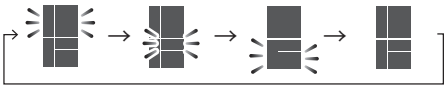

3



Set the temperature.

4



Press enter key.

Freezer

- Default setting is -18°C.
- You can adjust between -13°C and -21°C in step of 1°C.

Procedure **Display**

1



Press enter key.

2



Select the compartment.

Current setting

The compartments change in the order shown as on the picture by pressing this key.

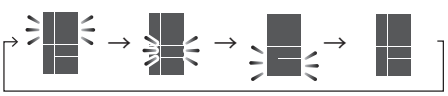

3



Set the temperature.

4



Press enter key.

Advanced setting

- You can adjust the temperature in steps of 0.5°C in the following way at procedure 3.

E.g. Refrigerator

Procedure **Display**

3



Set the temperature.

Set the temperature again.



Note

- The temperature that indicated on the control panel is not the exact temperature inside.
- The internal temperatures could be affected by such factors as the location of the refrigerator, ambient temperature and the frequency of door opening.

Temperature rise sign

If the inside temperature becomes as follows, this sign lights up.

Refrigerator : more than 10°C
Freezer : more than -10°C

- Check the quality of food before you eat.
- This sign may light up at start of power supply. This sign turns off by opening or closing the door of lighted compartment of compartment select key when this sign is ON.

Main modes

Energy saving

• Use this mode to switch the appliance to energy-saving operation.

How to operate

	Procedure	Display
1	 Press enter key.	
2	 Press icon.	▶ 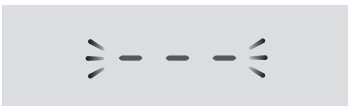 Current setting (This indication shows OFF.)
3	 Press icon again.	▶  The setting is changed. • ON / OFF switches in the order by pressing the icon.
4	 Press enter key.	▶ 

• While this mode is operating, the temperature inside of the refrigerator and freezer compartment becomes higher than the normal operation as follows. The displayed temperature is not be changed.

	Freezer	Refrigerator
Under “Energy saving” mode	Approx. 2°C plus	Approx. 1°C plus

(When the temperature is set at F: -18°C, R: 3°C.)

• Cancel this mode if you feel the beverages are not cooled enough or ice making takes longer time.

Note

• The efficiency of power saving depends on the usage environment (controlling temperature, ambient temperature, frequency of opening the doors, amount of food).

Vacation mode

• Use this mode when going on a trip or leaving the house for a long time.
• The temperature inside the refrigerator compartment is adjusted to approx. 10°C.

How to operate

	Procedure	Display
1	 Press enter key.	
2	 Press icon.	▶ 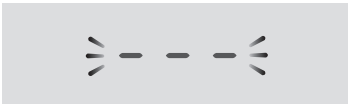 Current setting (This indication shows OFF.)
3	 Press icon again.	▶  The setting is changed. • ON / OFF switches in the order by pressing the icon.
4	 Press enter key.	▶ 

Note

• Food storage period in the refrigerator compartment becomes approx. 1/2-1/3 of normal operation. Use this mode only when there is no perishable food.
• Temperature of refrigerator compartment cannot be modified. (“10°C” is indicated on the display.)



< Standby display >

ENGLISH

Tips for saving energy

• Install the refrigerator in a well-ventilated area and keep the space to ventilate.
• Keep your refrigerator out of direct sunlight and do not place it next to heat generating appliance.
• Avoid opening the door as much as possible.
• Hot food should be cooled before storing.
• Place the food evenly on the shelves to allow the cool air to circulate efficiently.

Main modes

Express freezing

This mode is to freeze food quickly not to lose its flavor. Most moisture inside the food freeze between -1°C - -5°C. It is important to accelerate the freezing speed to reach -5°C for making high-quality frozen food.

How to operate

	Procedure	Display
1	Put the food.	
2	 Press enter key.	
3	 Press icon.	▶ 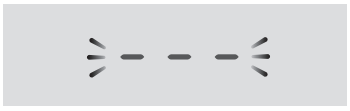 Current setting (This indication shows OFF.)
4	 Press icon again.	▶  The setting is changed. • ON / OFF switches in the order by pressing the icon.
5	 Press enter key.	▶ 

Express Freezing ends automatically in approx. 2~4 hours. (The icon turns off.)

Note

- Large food cannot be frozen in a single operation.
- Express Freezing may require more than 4 hours when the operation overlaps with defrosting of the cooling unit. The operation starts after defrosting is completed.
- Avoid opening the door as much as possible during operation of this mode.
- The operating sound may become louder than usual while this mode is ON but it is normal.

Tips for the best freezing

- Pack foods into freezer bags or put them in sealed containers to avoid freezer burn which is a dry spot on foods.
  To help foods freeze faster, pack them in thin layers.
- Lay them flat into the freezer case under the ice storage box.
- If you wish to freeze large items, you may remove the freezer case.

Plasmacluster

The ionizer inside your refrigerator releases clusters of ions which are collective masses of positive and negative ions, into the refrigerator compartment.
These ion clusters inactivate airborne mold fungus.

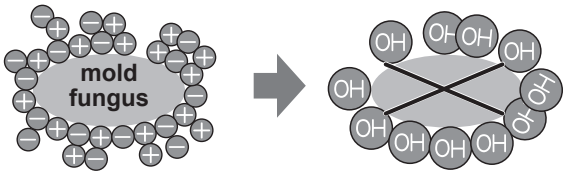

How to operate

	Procedure	Display
1	 Press enter key.	
2	 Press icon.	▶ 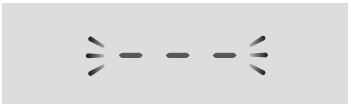 Current setting (This indication shows OFF.)
3	 Press icon again.	▶  The setting is changed. • ON / OFF switches in the order by pressing the icon.
4	 Press enter key.	▶ 

The indicator (blue) in the refrigerator turns on.

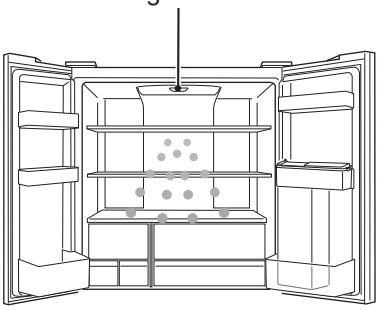

Note

- There may be a slight odor in the refrigerator. This is the smell of ozone generated by the ionizer. The amount of ozone is minimum and quickly decomposes in the refrigerator.

Multi temperature room

You can choose from four kinds of temperature zones. (3°C, 0°C, -8°C, -18°C).
This room has four different assisting modes.

Temperature zone

- Default setting is -18°C.
- See “Storing food” about suitable food for each temperature zone.

How to select

Procedure **Display**

1



Press enter key.

2



Select the compartment.

Current setting

The compartments change in the order shown as on the picture by pressing this key.

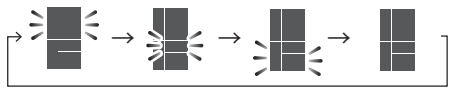

3



Select temperature zone.

Temperature zones change in the order shown as below by pressing ⇒ . (⇐ :Reverse)
↱ -8.0 → 0.0 → 3.0 → -18.0 ↰

4



Press enter key.

Note

- The temperature that indicated on the control panel is not the exact temperature inside.
- All temperature zones are unadjustable.
- When multi temperature room set at -18°C, its temperature varies depending on the setting of freezer.
- The internal temperatures could be affected by such factors as the location of the refrigerator, ambient temperature and the frequency of door opening.

Assisting modes

- See the next page about operation procedure.
- All assisting modes end automatically.
  The temperature is set at 0°C or 3°C automatically.
  (See the next page.)
- The mode of express cool, extra cool, defrost food and cool down can not be in operation at the same time.

Mode	Feature Effect / Note
Express cool	**This mode is to cool beverages or food quickly.**
Extra cool	**This mode is to cool beverages or food to ice-cold.** Food with high-moisture may freeze.
Defrost food	**This mode is to defrost frozen food.** This mode is very convenient to defrost food slowly. Make sure not to defrost perishable food completely to keep its flavor or nutrient.
Cool down	**This mode is to cool down hot food** • When you want to cool down high-temperature fluid food, make sure to keep it tightly covered or use an airtight container. Otherwise it may cause burn injury. • Do not store the container which the temperature of its outer surface is 60°C or higher. Multi temperature room case may become deformed by that heat.

Note

- Avoid opening the door as much as possible during the operation.
- All assisting modes stop in the event of a power failure. The temperature is set to the ending temperature of each mode after recovery from the power failure.

Notes for multi temperature room

- Move all food to other compartment when you want to use the assisting modes.
- Wait 30 minutes at least after changing temperature zone (**-8°C or -18°C**). The temperature of multi temperature room is not changed immediately.
- Do not put salt-containing food on the stainless tray directly. Stainless tray may rust.
- Food with strong smell should be wrapped or stored in airtight container tightly. Otherwise the strong smell may be spreading to other compartment.

ENGLISH

Multi temperature room Assisting modes

To select mode

1 Put the food.

2 Press enter key.

3 Select multi temperature room.

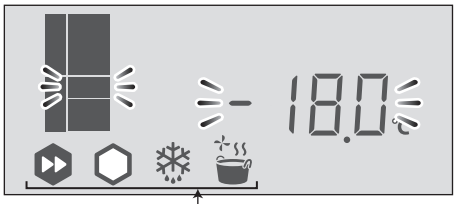

Assisting mode icons turn on.

Move to procedure 4 of each mode.

Express cool

Procedure	Display
4 Press icon.	Current setting (This indication shows OFF.)
5 Press icon again.	The setting is changed. • ON / OFF switches in the order by pressing the icon.
6 Press enter key.	

Operating time *1	**Approx. 60 minutes**
Temperature setting inside after completion of this mode *2	**3°C**

Extra cool

Procedure	Display
4 Press icon.	Current setting (This indication shows OFF.)
5 Press icon again.	The setting is changed. • ON / OFF switches in the order by pressing the icon.
6 Press enter key.	

Operating time *1	**Approx. 60 minutes**
Temperature setting inside after completion of this mode *2	**0°C**

Defrost food

Procedure	Display
4 Press icon.	Current setting (This indication shows OFF.)
5 Press icon again.	The setting is changed. • ON / OFF switches in the order by pressing the icon.
6 Press enter key.	

Operating time *1	**Approx. 6 hours**
Temperature setting inside after completion of this mode *2	**3°C**

Cool down

Procedure	Display
4 Press icon.	Current setting (This indication shows OFF.)
5 Press icon again.	The setting is changed. • ON / OFF switches in the order by pressing the icon.
6 Press enter key.	

Operating time *1	**Approx. 30~90 minutes**
Temperature setting inside after completion of this mode *2	**3°C**

*1 It takes longer time to complete when the operation overlaps with defrosting of the cooling unit because this mode starts after defrosting is completed.

*2 The temperature setting after cancellation is the same.

Additional settings

To select mode

Applicable modes

- Water dispenser lock <Only for SJ-FX660W>
- Door alarm off mode
- Sound off mode
- Control panel lock

1 Press enter key.

2 Hold enter key and press select key until the buzzer sounds.

Selected icon flashes.

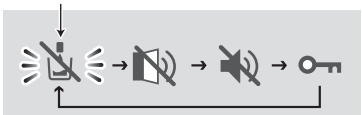

→ :The icons change in the order shown above by pressing ⇒. (⇐ :Reverse)

< Only for SJ-FX660W >

Water dispenser lock

• Use this mode to prevent the water dispenser from being used unintentionally by children or others.

	Procedure	Display
3	or ▶ Select icon.	
4	Press enter key. ▶	Current setting 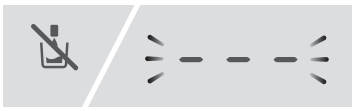
5	or ▶	
	• ON / OFF switches in the order by pressing select key.	
6	▶	
	Press enter key to set mode ON.	

Door alarm off

• Use this mode to switch the door alarm to OFF.
• Use this mode to switch the dispenser door alarm to OFF. <Only for SJ-FX660W>

	Procedure	Display
3	or ▶ Select icon.	
4	Press enter key. ▶	Current setting 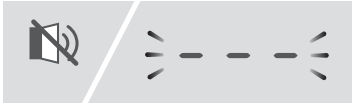
5	or ▶	
	• ON / OFF switches in the order by pressing select key.	
6	▶	
	Press enter key to set mode ON.	

Sound off

• Use this mode to switch the sound of control panel and the ending sound of ice tray cleaning to “OFF”.

	Procedure	Display
3	or ▶ Select icon.	
4	Press enter key. ▶	Current setting 
5	or ▶	
	• ON / OFF switches in the order by pressing select key.	
6	▶	
	Press enter key to set mode ON.	

ENGLISH

Additional settings

Control panel lock

• Use this mode to prevent the control panel from being used unintentionally by children or others.

Procedure **Display**

3



Select icon.

4



Press enter key. Current setting

5



• ON / OFF switches in the order by pressing select key.

6



Press enter key to set mode ON.

How to cancel control panel lock

Procedure **Display**

1



Touch enter key for 3 seconds or more.

2



Select OFF.

3



Press enter key to set mode OFF.

Automatic ice maker

Description

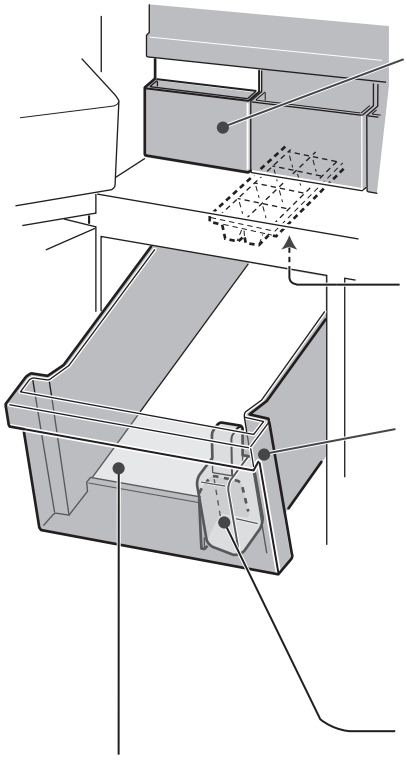

Water tank
Capacity : Approx. 1.8 L
Upper limit temperature of water : 60°C.

Ice tray
Ice tray is located at the upper section in the back.
(Unremovable)

Ice storage box
When you pull the ice storage box, it leans slightly and ice cubes come to the front part of the box.
Stored ice cube volume (Maximum)
Normal size ice
: Approx. 232 pcs.
Large size ice
: Approx. 112 pcs.

Shovel

Noise-prevention sheet
To turn down the dropping sound of ice cubes.
Do not throw away this sheet.

How ice cubes are made

Water supply

- Water is sent from the water tank to the ice tray.

Ice making

- Ice cubes are made. (8 pieces at one time)
- The number of ice cubes per cycle may sometimes change.

Releasing

- Ice tray rotates to release the ice cubes and returns to “Water supply”.
- The ice tray doesn’t rotates when the ice storage box is full.

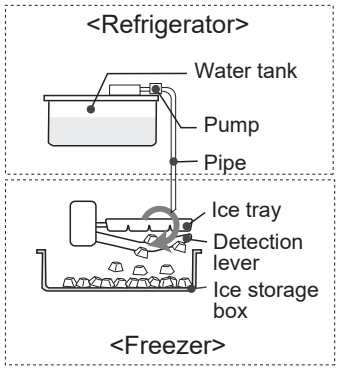

Detection lever
The volume of ice cubes are checked periodically by this lever.

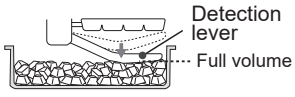

The volume of ice cubes may decrease if they are not smoothed.

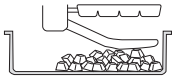

(About half the volume)

Ice making

You can choose 2 sizes as shown below.

Mode	Icon	Required time for each ice making
Normal ice		Approx. 2 hours
Large ice		Approx. 3.5 hours

Note

- The ice making time as shown above is only a rough indication at the ambient temperature of 30°C, temperature adjustment set to the initial setting (refrigerator : 3°C, freezer : -18°C), Energy saving turned off and with no opening or closing of the doors.

How to operate

- All the ice making modes are OFF(- - -) by a default setting.

Procedure **Display**

1



Press enter key.

2

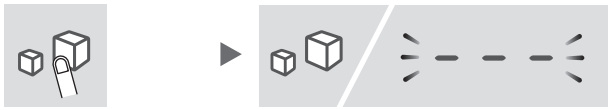

Press icon. Current setting (This indication shows OFF.)

3



Press icon again. Current setting (This indication shows normal ice.) The setting is changed.

- The size of ice cube switches in the order by pressing the icon.

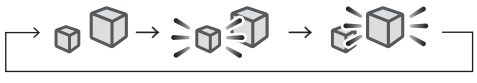

4



Press enter key.

ENGLISH

Automatic ice maker

How to use

Before using

- Wash the water tank and the ice storage box.
- Use ice tray cleaning mode to clean the ice tray and the pipe. (There may be odor or dirt within the automatic ice maker.)

Procedure

1 Pour water into the water tank, and set the water tank.

Warning
Fill with potable water only.

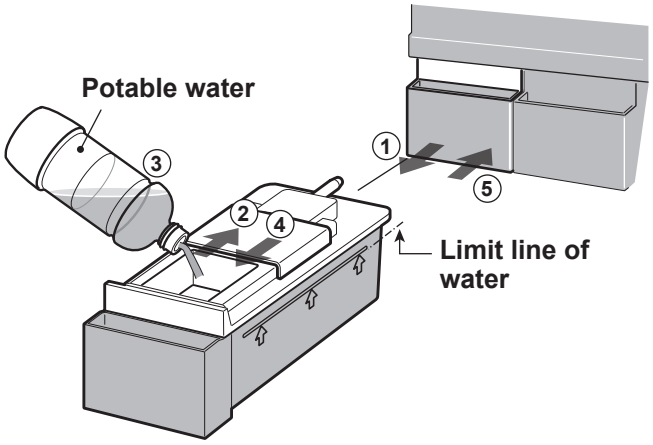

Note

- Step ③ : Do not use other than potable water. (juice, tea, soda and sports drink etc.) They may dirty the inside of the ice maker and lead to break down.
- Step ⑤ : Do not tilt the water tank. Otherwise, water may spill when you carry it.
- Step ⑤ : Insert the water tank securely. Ice cubes are not be made unless the tank is inserted fully.

Ice cubes are made automatically.

2 Take out ice cubes.

- 2 types of ice cube are made at the same time.

 **Cube**  **Multifaceted shape**

- Ice cubes piled up at the back of the ice storage box. Spread them out to the front part to make more ice cubes.

How to assemble or disassemble water tank

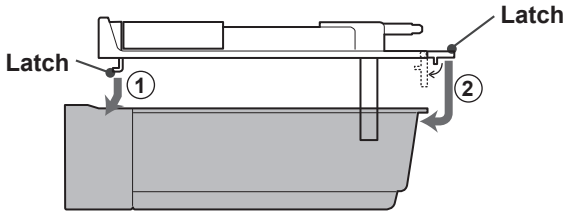

- The picture above shows how to assemble the tank. Disassembly is in an opposite way.

Note

- It takes approximately 24 hours to make the first set of ice cubes.
- For hygienic reasons, refill the water once a week even if water remains in the tank.
- Remove the water tank approximately once a week and wash it with water.
- When you leave the tank empty, it may sometimes make a groaning noise but this is normal.
- Do not place the shovel or food on top of the ice cubes. This may cause the automatic ice maker to malfunction (damage of the detection lever, etc.) or the case not being able to be pulled out. Set the shovel at the designated location.

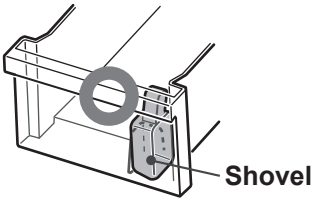

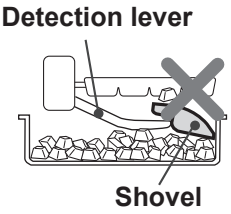

- Large size ice may not be made when the water level of the water tank is low even if large ice mode is selected.

White in ice cubes and floating substance

- The minerals contained in water may solidify and whiten as water freezes. Minerals turn into a state which is insoluble once it freezes, so melting the ice cubes will leave only white floating substance, but this is normal.
- This is more likely to happen when you use hard water (e.g. The hardness of the water is 100 mg/L or more).

Ice making takes longer when:

- The room temperature is high.
- Less cooling operation, e.g. in winter.
- Many food products are stored.
- Refrigerator is defrosting of the cooling unit.
- The door is frequently opened.
- When you restart the ice making operation.
- Energy saving mode is in operation.

Ice making right after changing the mode

- The batch of ice cubes made right after changing the operating mode does not reflect the change in size. This is because there are still half-made ice cubes left in the ice tray when switching to the changed mode. Ice cubes of the 2nd batch or later reflects the mode change.

Protrusions of ice cubes: There are some slits in the ice tray.

- Therefore, the ice cubes have protrusions that caused by these slits.
- The protrusions may be pointed. Be careful when putting the ice cube directly in your mouth.

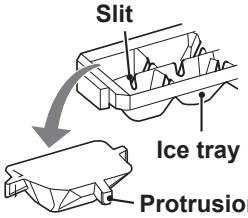

Automatic ice maker

Canceling Ice making

- Use this mode during night time or winter time.
- You can use the ice storage box as a freezer case.

How to operate

Procedure **Display**

1



Press enter key.

2



Press icon.



Current setting
(This indication shows Normal ice is ON.)

3

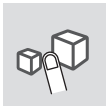

Press icon again.





Press icon again.



The setting is changed.

- The size of ice cube switches in the order by pressing the icon.

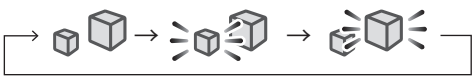

4





Press enter key.

5 Empty the water tank.
Dry it thoroughly and set into the original position.

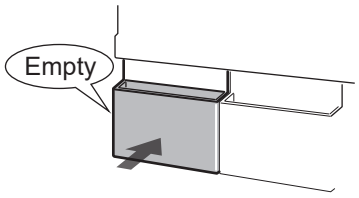

After canceling the ice making

- Even after canceling the ice making mode, the ice tray and the detection lever operates because the ice maker conducts the ice releasing once.
- Wait 5 hours after canceling the ice making to put food in the ice storage box.

To start operation again

- Refer to "**Ice making**".

Ice tray cleaning

- This mode is for cleaning the ice tray and the pipe.
- When use this mode : Before making ice for the first time or when the refrigerator has not been used for a long time.
- The water is supplied from the water tank to the ice tray forcibly.
- The water discharge amount at one cleaning will be 100mL.
  However, when large ice mode is set as on, the water discharge will be 230mL.

Preparation

- Pour water into the water tank and set it.
- Empty the ice storage box.

How to operate

Procedure **Display**

1



Press enter key.

2



Press icon.



Current setting
(This indication shows OFF.)

3



Press icon again.



The setting is changed.

- ON/ OFF switches in the order by pressing the icon.

4





Press enter key. (Ice tray cleaning starts.)

- It takes approximately 40 sec.
  Do not pull out the ice storage box during the operation.

Cleaning in progress

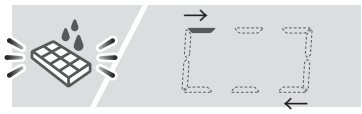

Finish ♪♪



5 Follow steps 3 to 4 again.

6 Press enter key to complete. Empty the water in the ice storage box.
Dry it thoroughly and set it into the original position.

Note

- The setting of ice making returns to previous state after the cleaning is completed once.

ENGLISH

Water dispenser < Only for SJ-FX660W >

Description

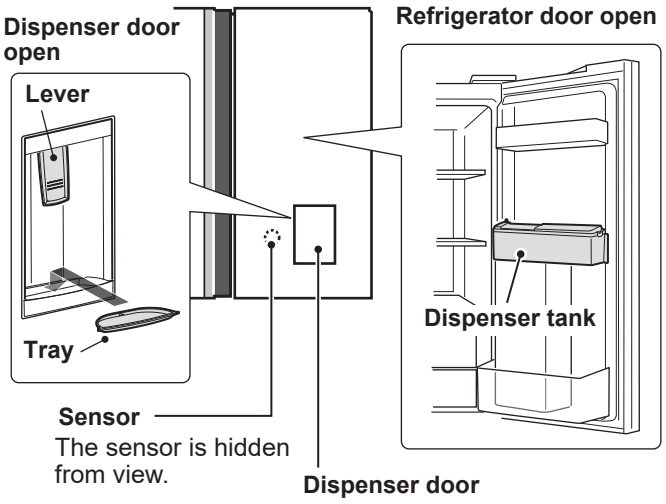

Dispenser door

- Touch the sensor to open the dispenser door. (The dispenser door closes antomatically in a few minutes.)
  When you want to close the dispenser door, touch the sensor until the sound starts.
- The dispenser door alarm sounds before closing. (You can cancel the alarm by “Door alarm OFF” mode.)
- Touch the sensor or open the refrigerator door or freezer door (left) to prolong the opening time of the dispenser door.

If objects or your hand is caught in the dispenser door while the dispenser door is rotating.

- The dispenser door stops halfway. (The dispenser door closes automatically after a while. Touch the sensor to open the dispenser door again.)

If the motion of the dispenser door stops because of a power failure.

- The dispenser door closes automatically after recovery from power failure.

Warning
- **Do not open the dispenser door forcibly.**
- **Do not touch the dispenser door when it is rotating.**

Locking the dispenser door

Use this mode to prevent the water dispenser from being used unintentionally by children or others.
(See “Additional settings”.)

How to use

Before using

Remove the dispenser tank and wash it.
(See “Cleaning the dispenser tank” about how to remove it.)

Procedure

1 Pour the water into the dispenser tank.

Warning
Fill with potable water only.

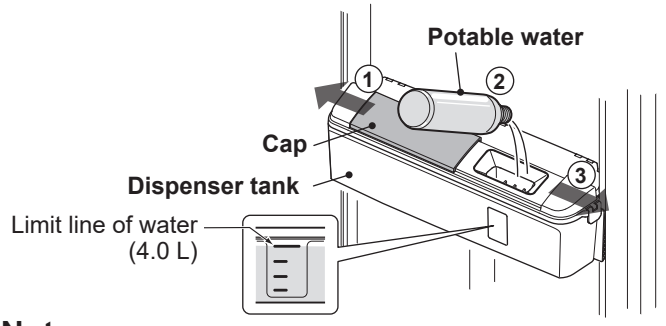

Note

- Make sure to install the dispenser tank before pouring water.
- Make sure to close the cap. Otherwise, water may spill when the door is opened or closed.
- Do not use other than potable water. If other liquid such as juice is used, it may cause a failure.
- Upper limit temperature of the water is 50°C.

2 Pour water into a glass.

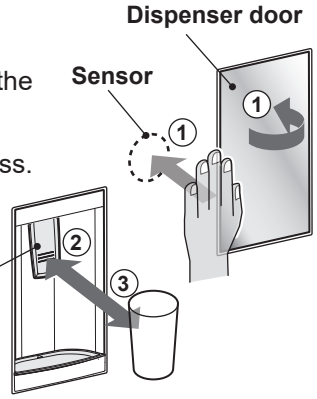

① Touch the sensor to open the dispenser door.

② Push the lever with the glass. (Water is poured.)

③ Pull the glass. (Water is stopped.)

④ Touch the sensor to close the dispenser door until the sound starts.
(The dispenser door closes automatically even if you do not touch the sensor.)

Note

- Hold your glass beneath the dispenser for a few seconds after use, to catch all the dripping. Some dripping may come down after using the dispenser. (Dripping may increase especially after refilling water to the empty dispenser tank.)
- For hygienic reasons, refill the water in the dispenser tank approximately once a week. Push the lever and let out all water in the dispenser tank.
- Throw away the water in the tray frequently. Otherwise water may overflow.
- If the water dispenser is not used for an extended period of time, clean and dry the dispenser tank thoroughly and attach it to the original position.
- Do not put a glass or objects on the tray.

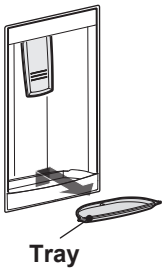

Water dispenser

Cleaning the dispenser tank

Remove the dispenser tank approximately once a month and wash it with water.

1 Empty the dispenser tank.

Push the lever and let out all water in the dispenser tank.

2 Remove the dispenser tank from the door.

①. Take the both latches off.

②. Lift the dispenser tank up to remove.

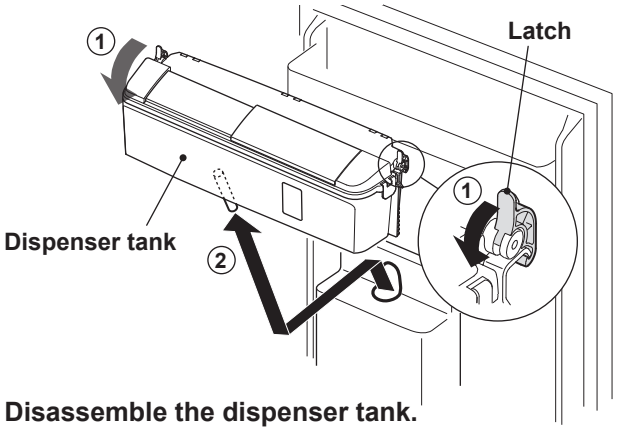

3 Disassemble the dispenser tank.

①. Remove the cap.

②. Remove the cover. (Latches : 5 pieces)

③. Remove the tank pipe and the tank nozzle.

④. Disassemble the tank nozzle.

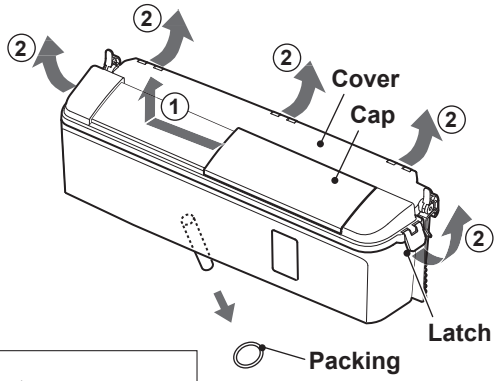

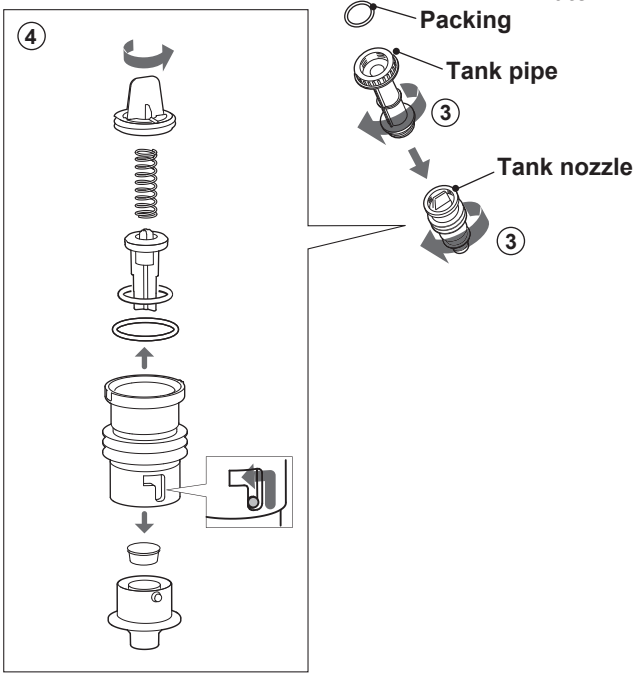

After cleaning

1 Assemble the dispenser tank.

(Reverse procedure to disassemble.)

Ensure that each parts are attached firmly. Otherwise it may cause water leakage.

Assemble the tank nozzle.

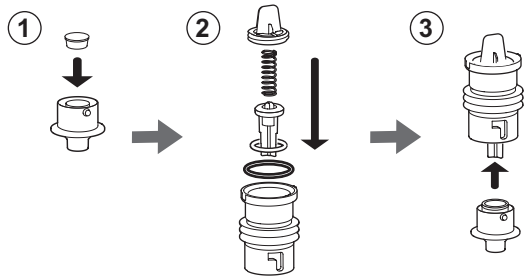

2 Install the dispenser tank.

Insert the dispenser tank fully and make sure to fasten the latches to install.

The dispenser tank must be installed to use. Otherwise dew condensation may form on the inside of the refrigerator.

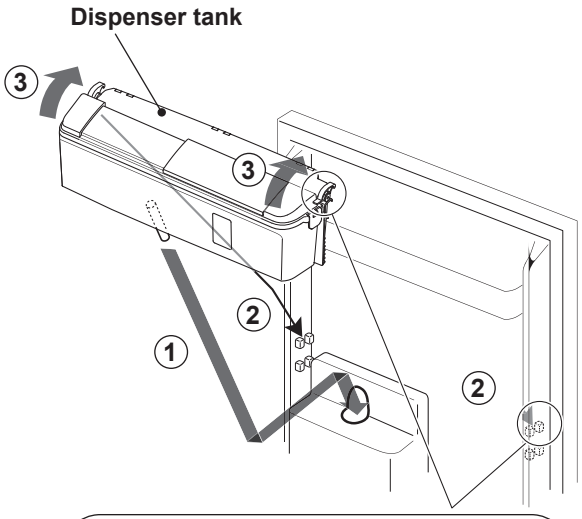

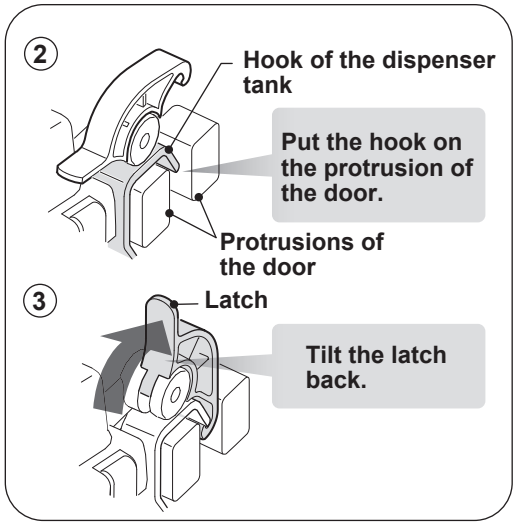

Note

- When humidity is high, dew condensation may occur on tank pipe and tank nozzle.
- Make sure not to lose the packing when you disassemble the tank.

ENGLISH

Care and cleaning

Important

Follow the tips below to prevent cracks on the inner surfaces and plastic components.

- Wipe out food oil adhered to plastic parts.
- Some household chemicals may cause damage, so use only diluted washing-up liquid (soapy water).
- If undiluted detergent is used or soapy water is not wiped off thoroughly, it may result in cracks of plastic parts.

Cleaning

For hygienic reasons, make sure to do following things regularly.

- Remove the accessories (e.g. shelves) from the cabinet and the door. Wash them by warm soapy dishwashing water. After that, rinse them in clean water and dry.
- Clean the inside with a cloth soaked in warm soapy dishwashing water. Then, use cold water to wipe off soapy water thoroughly.
- Wipe the exterior with a soft cloth each time it gets dirty.
- Clean the magnetic door seal with a toothbrush and warm soapy dishwashing water.

Note

- Do not use heavy-duty cleansers or solvents (lacquer, paint, polishing powder, benzine, boiled water, etc.) which may cause damages.
- If you pull out the power plug once, wait 5 minutes at least before connecting the power plug again.
- The glass shelves weigh approximately 3 kg each. Hold them firmly when remove from the cabinet and carry.
- Do not drop objects inside the refrigerator or strike the inner wall. This may cause cracks to inner surface.
- The shaded parts in the picture below are unremovable.

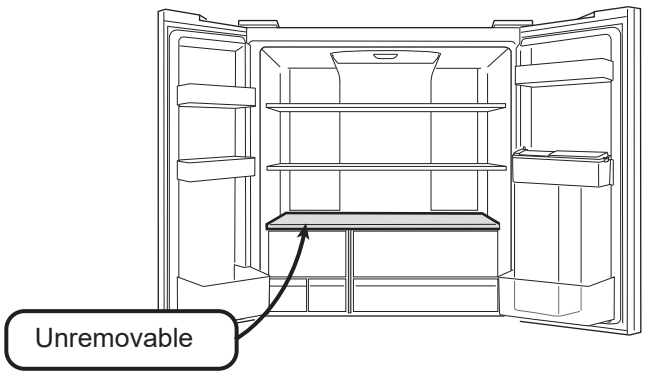

Switching off your refrigerator

If the refrigerator needs to be switched off for an extended period, the following steps should be taken to reduce the growth of mold:

1. Remove all food.
2. Remove the power plug from the socket.
3. Clean and dry the interior thoroughly.
4. Keep all the doors open slightly for a few days to dry.

Defrosting of the cooling unit

Defrosting is automatically operated by a unique energy saving system.

When the compartment light is blown

Contact the service agent approved by SHARP to replace the light. The light is not to be replaced other than by qualified service personnel.

Before you call for service

Before calling for service, check the following points.

General problems

Problem	Solution / Situation
The refrigerator does not cool at all. (The control panel shows the following display.) 	The refrigerator is set at “Demonstration mode” (Icons light up in order). Follow the steps 1 to 2 to cancel this mode. 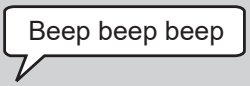 **Cancel operation** 1. Open the refrigerator door. 2. Press Enter key 5 seconds or more with the refrigerator door open.
The outside of the cabinet is hot when touched.	It is normal. This is because of the hot pipe is in the cabinet in order to prevent dew generation.
The area around the door handle and dispenser door <Only for SJ-FX660W> are hot when touched.	It is normal. The heater to prevent dew generation is inside the door. 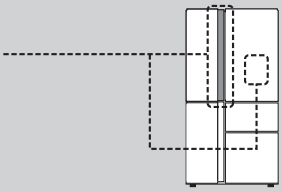
Refrigerator makes loud noise.	Following sounds are normal. • The compressor makes loud noise when its operation starts. -- Sound becomes quieter after a while. • The compressor makes loud noise once a day. -- Operating sound is made immediately after automatic defrost operation of the cooling unit. • Sound of flowing fluid (gurgling sound, fizzing sound). -- It is caused by refrigerant flowing in pipes (sound may become louder from time to time). • Cracking or crunching sound, squeaking sound -- It is caused by expansion and contraction of inner walls and internal parts during cooling.
Frost or dew appears inside or outside the refrigerator.	This may occur in one of the following cases. Use a wet cloth for wiping frost and a dry cloth for wiping dew. • When the ambient humidity is high. • When the door is frequently opened and closed. • When food containing plenty of moisture are stored. (Wrapping is required.)
The food in the refrigerator compartment are frozen.	• Is the refrigerator temperature control set at 0°C for a long time? -- Change the temperature control to 3°C or warmer. • Is the freezer temperature control set at -21°C for a long time? -- Change the temperature control to -18°C or warmer. • If ambient temperature is low, food may freeze even if the refrigerator compartment is set at 6°C.
Odors in the compartment.	• Wrapping is required for the food with strong odors. • Deodorizing unit cannot remove all odors.
Door alarm does not stop.	• The alarm stops after close the door.
The control panel does not work.	This may occur in one of the following cases. • The panel or your finger is soiled with dripping, oil and etc. • When you touch the panel with gloved hand, adhesive bandage on your finger, nail or objects. • Sticker or tape is affixed on the keys. • Touch position is slightly off from the keys. • Operate time is not enough for the keys to work.

Before you call for service

Ice making

Problem	Solution / Situation
Ice maker does not work.	• Is water in the water tank? • Is the water tank securely set? • Is the shovel or food in the ice storage box? • Are all ice making modes “OFF”? • Are the ice cubes piled up at the back of the ice storage box? (Spread out the ice cubes evenly.) • Try the ice tray cleaning. If the ice tray cleaning works properly, wait for one day. Ice making starts again. 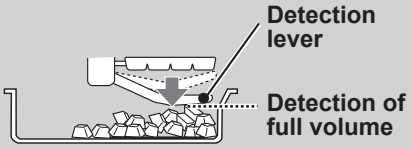
It takes time to make ice cubes.	• Is it right after restarting ice making? • Is it right after refilling the tank with potable water?
Ice cubes are small, rounded or connected. Ice cubes have protrusions. There are some holes in ice cubes.	• If the water level of the water tank is low, the size of ice cube may become smaller than usual. • If you store ice cubes for a long time, they may become smaller, rounded, lumped together. • The protrusions of the ice cubes are caused by the slits in the ice tray. • The hole comes from air bubbles in ice cubes which may be lumped together and form bigger holes.
Ice cubes have some odor	• Is the water in the water tank old or with some odor? • Is there remaining detergent or bleach in the water tank used for cleaning the water tank? • If the ice cubes leave for a long time, odors may spreading to the ice cubes.
No water or ice cubes drop even when using “**Ice tray cleaning**”.	• Is the ice storage box full with ice cubes? Is there the shovel or other thing in the ice storage box? (Empty the ice storage box.) • Is water in the water tank?

Water dispenser < Only for SJ-FX660W >

Problem	Solution / Situation
No water comes out.	• Is dispenser tank securely attached? • Is water in dispenser tank?
Dispenser door does not open.	• Is water dispenser door lock “ON”?
Water remains in the tray.	• Some water may come out of the water dispenser or inner pipe. It is normal. Throw away the water.

If you still require service

• Refer to your nearest service agent approved by SHARP.

感謝您購買 SHARP 產品。在使用 SHARP 電冰箱之前，為使您能夠充份使用您所購買的冰箱，請仔細閱讀本使用說明書。

- 本冰箱可用於製作冰塊、冷藏和冷凍食物。
- 這個冰箱僅限於家庭用途，使用冰箱的環境溫度已在表格中寫明。氣候類型已在標牌上詳細說明。
  本冰箱在氣候類型指定的環境溫度範圍內可正常使用所有功能。如在較冷的環境溫度下使用本冰箱，則環境溫度需達到 +5°C 才能保證不損壞冰箱。
- 冰箱在一段長時間內不應受到 -10℃或以下的溫度。

僅限於家庭用途

氣候類型	可接受的環境溫度範圍
SN	+10°C ~ 32°C
N	+16°C ~ 32°C
ST	+16°C ~ 38°C
T	+16°C ~ 43°C

安全注意事項

⚠	**警告**	這表明導致死亡或重傷的風險很高。
⚠	**安全注意事項**	這表明導致材料受損或人員受傷的風險很高。
⚠	**安全注意事項**	火焰標誌表示此裝置有發生火災事故的風險。

⚠ 警告

冷媒種類

冰箱含有易燃製冷劑（R600a：異丁烷）和絶熱發泡氣體（環戊烷）。為防止著火和爆炸，請遵守以下規則。

- ■ 請勿破壞冰箱電路。
- ■ 請務必避免任何尖銳的物體碰觸製冷系統。冰箱內部及後側的製冷系統內含有製冷劑。
- ■ 請勿使用機械設備或其他方式來加速除霜過程。（此冰箱已採用自動除霜系統。）
- ■ 請勿在冰箱內使用電器。
- ■ 請勿堵塞冰箱周圍的空間。
- ■ 請勿在冰箱附近使用易燃性噴霧劑，例如噴漆，否則可能會導致爆炸或火災。
- ■ 請勿在冰箱附近儲藏如噴漆等可燃性噴霧罐。
- ■ 如果冰箱的冷卻系統出現故障，請勿接觸牆壁電源插座，也勿使用明火。打開窗戶，使房間空氣流通。然後聯繫 SHARP 認可的售後服務中心進行維修。

電源線，插頭，插座

為防止觸電或火災，請仔細閱讀以下規則。

- ■ 請確定在安裝或移動時保護電源線不會受損。若電源插頭或電源線鬆脫，請勿插入電源插頭。
- ■ 請勿在冰箱後部放置多個移動式插座或移動電源。
- ■ 長的電線或轉換插頭。
- ■ 將電源插頭插入符合額定電壓要求的插座上。
- ■ 正確地將接地棒連接到接地端子。
- ■ 請勿用濕手接觸電源插頭。
- ■ 拔出電源插頭時，請不要只拉住電源線，應該拿住插頭端拔出。
- ■ 電源插頭上積滿灰塵是引起火災的原因。因此，請時常將其擦淨。
- ■ 冰箱如果長時間不使用，請將插頭拔出。
- ■ 電源線損壞時，請到 SHARP 認可的售後服務中心更換，以免造成危險。

安裝

- ■ 請勿將冰箱設置在濕氣多及濺得到水的地方。這樣會因絶緣失效而導致漏電。 而且有時會在冰箱外側結露。
- ■ 將冰箱穩妥地安裝在地板的水平位置上。

使用中

- ■ 請勿儲藏揮發性物質和易燃性物質，如乙醚、汽油、丙烷氧、粘合劑、純乙醇等。此類物質有爆炸之危險。
- ■ 請勿在冰箱內儲存溫度敏感型產品，例如醫藥產品。否則產品極可能會變質。
- ■ 請勿改裝冰箱。修理技術人員以外的人員拆卸和修理本機，會導致火災、觸電和受傷。
- ■ 請勿在冰箱頂部放置任何物品。如果物品從冰箱頂部掉落，可能會導致人員受傷。
- ■ 請勿觸摸自動製冰機的機械零件（儲冰盒的上半部）。製冰盒翻轉時身體可能會受傷。
- ■ 請勿用力撞擊玻璃門。
  < 限於 SJ-FX660W>
  否則玻璃門可能會破裂，導致身體受傷。
- ■ 請勿觸摸旋轉中的飲水機門。若手指被門夾住，手指可能會受傷。< 限於 SJ-FX660W>
- ■ 此冰箱適合 8 歲及以上的兒童使用。在有符合電器使用安全的監督或指導及了解潛在危險的前提下，此冰箱也適合身體、感官或智力方面有缺陷的殘障人士、或者缺乏相關經驗或知識的人士使用。禁止讓兒童玩耍冰箱。在無任何監督的情況下，兒童不得對冰箱進行清潔及維修保養。

安全注意事項

保養

■ 為了防止觸電，首先拔掉冰箱的電源插頭。
■ 請勿直接將水灑在冰箱的內部和外部。這樣會導致生銹及絕緣性能下降。

故障

■ 如果聞到燒焦的味道，請立即拔出電源線，然後聯繫 SHARP 認可的售後服務中心進行維修。
■ 萬一發生瓦斯氣漏事故，請勿用手去觸摸冰箱和插頭，要打開窗戶通風。

廢舊冰箱的處理

■ 確保冰箱在等候處理的過程中不會給兒童帶來危險。（例如拆除門環以防兒童不慎卡入。）
■ 請妥善處理冰箱。冰箱請運送至專業的可燃性製冷劑及絕熱發泡氣體廢料處理廠。

⚠ 安全注意事項

運輸

■ 安裝或移動冰箱時，請使用防護墊以防止地板受損。
■ 請用冰箱背面和底部的把手進行搬運。如果抬起冰箱的方式不當，可能會導致人員受傷。

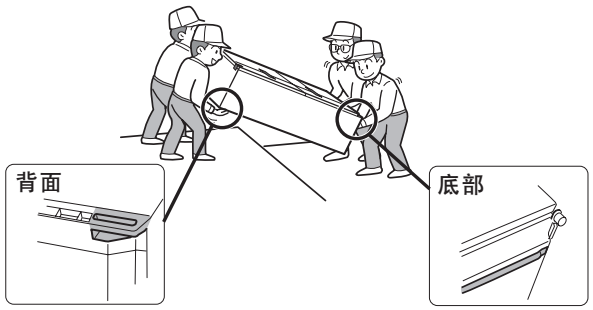

使用中

■ 不要用濕手去觸摸冷凍室內的食品和金屬製容器。恐會導致手凍傷。
變溫室設在 -8°C 或 -18°C 時，皆完全相同。
■ 請勿將瓶裝或罐裝飲料放入冷凍室。
變溫室設在 -8°C 或 -18°C 時，皆完全相同。
■ 僅能使用飲用水製冰。
■ 當其他人的手靠近冰箱門時，請勿打開或關閉冰箱門，否則冰箱門會夾到其他人的手。
■ 請勿在冰箱門的冰箱盒上放置尺寸過大的物品。如果該物品從冰箱盒上掉落，可能會導致人員受傷。
■ 安裝或拆下時，請確定小心處理玻璃層架。若不慎摔落玻璃層架，此層架可能會破裂或使人受傷。

安裝

1 冰箱的周圍應確保足夠的通風空間。
・圖中顯示出安裝冰箱所需要的最低限度的空間。
耗電量的測試需在不同空間條件下進行。

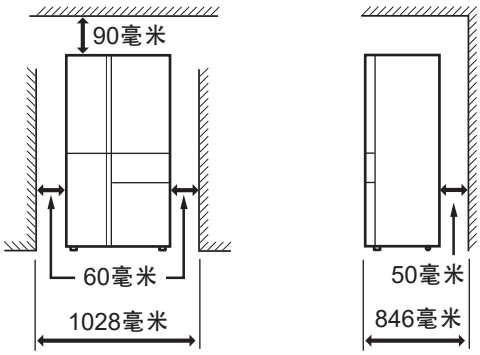

・冰箱周圍的空間越大，冰箱運行時的耗電量越小。
・若在小於上圖所示的空間尺寸使用冰箱，可能會導致裝置溫度上升、吵雜的噪音以及故障。

使用時所需總體空間

	SJ-FX660W	SJ-FX660S2
a	1440毫米	1432毫米
b	1330毫米	1330毫米

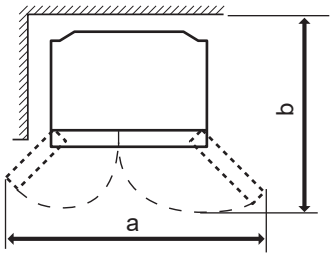

2 請利用前面的兩個調整腳，將冰箱穩妥地安裝在地板的水平位置上。

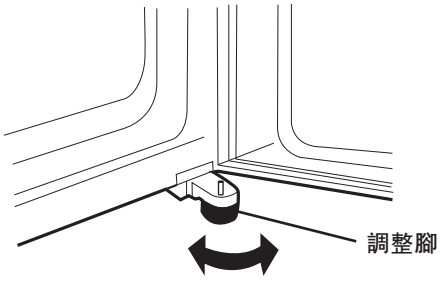

3 當左右門沒有完全對準時通過調整腳來調整。

當左門抬高時。

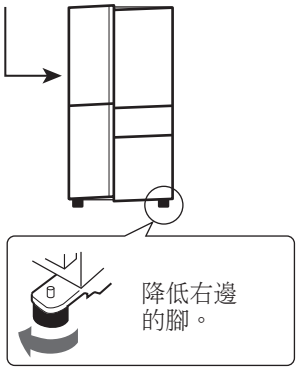

當右門抬高時。

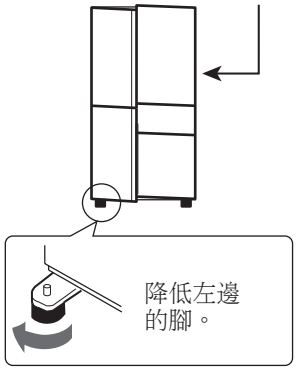

・請旋轉可調式腳墊，直到對面的腳墊稍微離地為止。

4 以正確安裝的插座連接電器。

請注意

・設置冰箱時要充分考慮便於插拔插銷。
・請勿將冰箱放在陽光直射的地方或發熱機器的旁邊。
・請勿將冰箱直接放在地面上。請在冰箱下面準備適當的台座，如木板。
・在打開冰箱門的狀態下插入電源插銷時，會有冰箱門報警鳴響，但是這不屬於異常。 關上冰箱門後報警就會停止。
・請勿將冰箱靠在牆上。
冰箱周圍的牆壁可能會因熱輻射造成的氣流而變髒或褪色。

四個腳輪位於冰箱底部。

・移動車輪使冰箱可以前後移動。



移動車輪

在使用冰箱前

・用温水浸泡過的軟布清潔冰箱內部。
・如果使用肥皂液，請用水徹底擦掉殘留肥皂液。

中文

各部位名稱

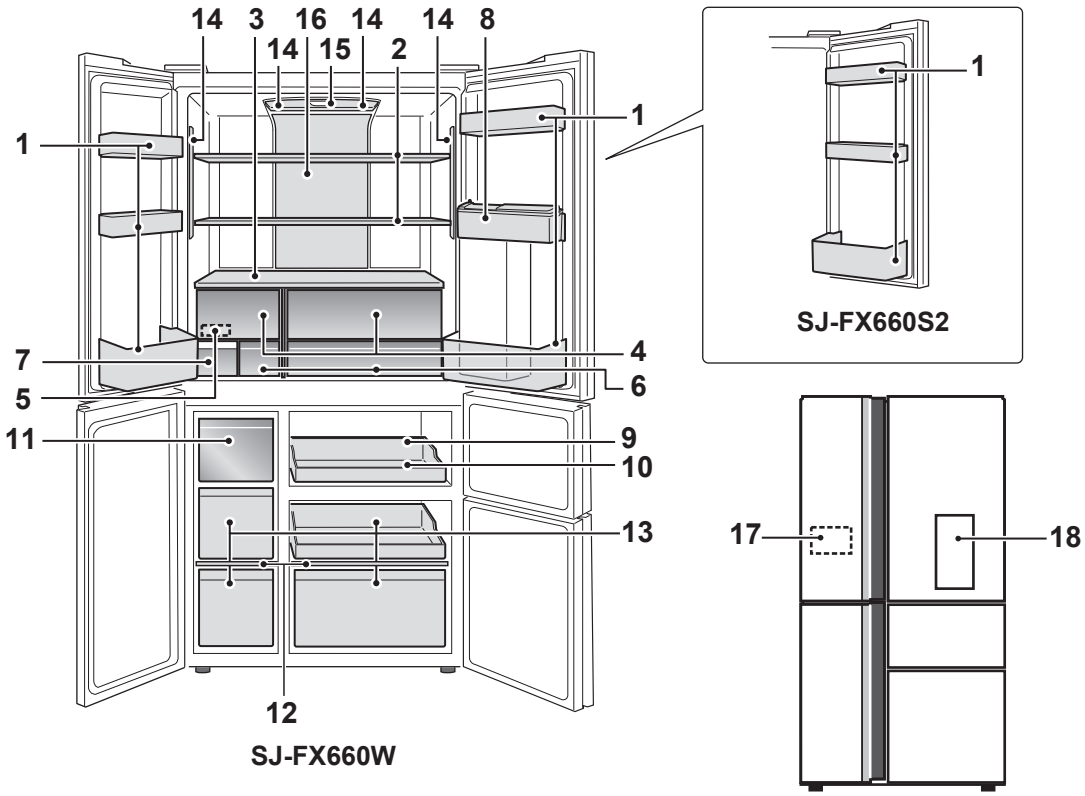

1. **門盒**
   （SJ-FX660W： 5 個
   SJ-FX660S2： 6 個）
2. **冷藏室盤架**（2 個）
3. **固定式層架**
4. **蔬果箱**
   潤澤護蓋僅安裝於右側。
   此護蓋適用於儲藏高水分的新鮮食材。

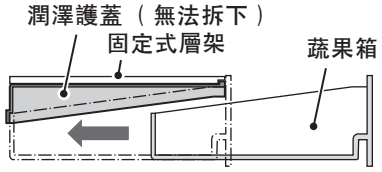

5. **蛋架**
6. **保鮮盒**
7. **水箱（製冰器）**
8. **飲水機水箱 < 限於 SJ-FX660W >**
9. **保鮮盒**
10. **不鏽鋼盤**
11. **儲冰盒**
    請勿用儲冰盒製冰或放入油脂類。
    儲冰盒有時會因之而碎裂。
12. **冷凍架**
13. **冷凍盒**
14. **箱內燈**
15. **自動除菌離子指示燈**
16. **混合冷卻面板**
    本面板從後部間接地使冰箱冷藏室變涼。這是一種冷藏食品的温和方法，不會使食品暴露在冷氣流之中。
17. **控制面板**
18. **飲水機 < 限於 SJ-FX660W >**

若您想要在冰箱內儲藏大型物品

- 您可拆下上圖中的任何層架或編號 1、2、4、5、6、7、9、10、11、12、13 的置物架。
- 即使你在以上情況下使用冰箱，也不會影響製冷性能。

門報警器

- 門警報會在門* 開著時響起。
- 門警報會在門打開後 1 分鐘響起，然後再過 1 分鐘後再度響起（每分鐘一次）。
- 如果門* 保持開啓狀態約 3 分鐘，報警器將會連續響起。
- 關門後便會停止警報。

（* 僅限冷藏室門與左冷凍室門。）

脱臭裝置

- 已經將脱臭觸媒設置在冷氣的通道上。
  無須操作與清潔。

食品的儲存

・要延長易於腐爛食品的保存期限，就應當盡可能選擇較新鮮的食品。下面為延長食品保存期限的簡要介紹，可供您參考。
・食物的儲藏期限有限。請確定未超過製造商指示的有效期限。

冷藏室

水果／蔬菜

・為盡量減少水份的流失，水果和蔬菜要用保鮮紙及袋子（不封口）之類的塑膠袋輕輕包上，並將其放入蔬果箱內。
・易受低溫影響的蔬果應儲藏於冰箱以外的涼爽地點。

乳製品和雞蛋

・幾乎所有乳製品的外包裝上都標有適當的保存溫度和保存期限。
・請用箱內的蛋架保存雞蛋。

肉類／魚／禽肉

・請將其放在容器上，並包上保鮮膜。
・若是大塊的肉、魚和禽肉，請將其放在盤架的內側。
・已經煮熟的食品務須用保鮮膜包好，或將其放在密封容器內。
※生鮮食物注意事項
生鮮食物應妥善包裝，且不應存放太久，避免食物腐壞進而影響其他存放的食物。

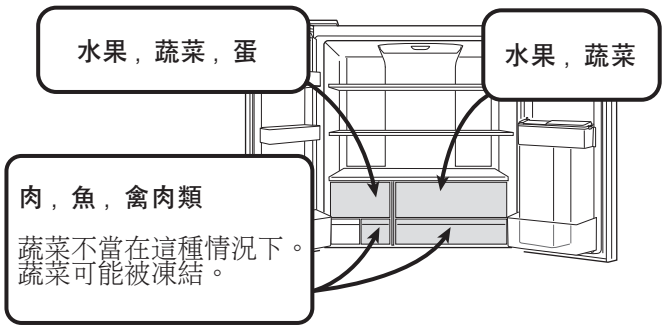

冷凍室

・若要快速冷凍食品，每次都必須少量放入。
・食品應進行恰當密封，要封緊或蓋緊。
・將食品均勻地放入冷凍室。
・袋子和容器上要標上標示，並寫清楚冷凍食品的內容。

變温室

您可選擇四種温度區域。如需如何選擇温度區域的資訊，請參閱「變温室」。

温度區域	模式	食品的儲存
3.0℃	冷藏	飲料，家常菜點心等
0.0℃	保鮮	肉，魚 乳製品 類
-8.0℃	輕冷凍	肉，魚類
-18.0℃	冷凍	冷凍食物

輕冷凍

此模式適合儲藏食物，不會凍結變硬。
即使食物很大，您仍可輕鬆切取食物。
若食物太大不好切，請將食物留置在砧板上 5 到 15 分鐘之後再切。
請注意，此模式不是為了長期儲藏冷凍食物所設計。
儲藏的食物應在一週內食用完畢。

防止冰箱內部結水珠或結霜的建議

・請妥善關好冰箱門。如果冰箱內的食品掉落，可能會導致冰箱櫃體和門之間形成縫隙。請將食品放回冰箱內的盤架或冰箱盒。
・應以如食物容器或保鮮膜包裝或密封儲藏的物品。

合適地儲藏食物的建議

・為使冷氣充分循環，請將食品均勻地放在盤架上。
・請將較熱的食品涼下來以後，才保存起來。如果將較熱的食品放進冰箱，冰箱內的温度會升高，這樣往往很容易導致食品腐爛變質。
・冰箱開門時間過長會讓內部温度顯著上升。
・請勿讓食品和容器擋住使冷氣循環的出風口和吸入口。
否則，食品就不能均勻地冷卻。
・請勿直接將食品放在冷氣出風口旁。
這樣會引致食品凍結。

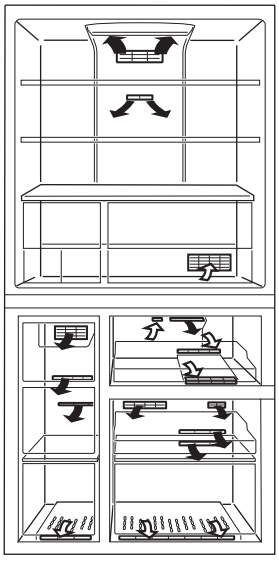

⇦ 進
➡ 出

中文

控制面板



圖示

所有模式的預設設定為「關閉」。

主要模式

- **節約能源**
- **空閑模式**
- **快速冷凍**
- **淨離子群**
- **製冰**
- **製冰盒清潔**

變温室輔助模式

- **快速製冷**
- **強力製冷**
- **將食物解凍**
- **降温**

其他設定

- **飲水機鎖定**
  < 限於 SJ--FX660W >
- **門警報關閉**
- **聲響關閉**
- **控制面板鎖定**

再次通電時

- 如果在快速冷凍或製冰盒清潔過程中停電，冰箱將停止運轉。
- 如需輔助模式的資訊，請參閱「變温室」。
- 其他設定和停電前相同。

控制面板亮起

按下輸入鍵。

控制面板顯示各儲藏室的預設温度及運作圖示。
（由於所有模式的預設設定為「OFF」，因此所有圖示皆不會亮起。）

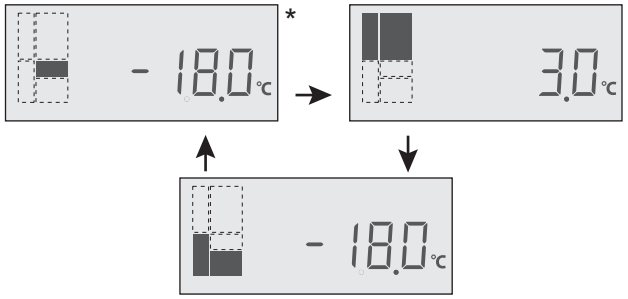

< 待機顯示器 >

*其中一個輔助模式運作時，顯示幕上未指出温度。
温度顯示會有不同變化。

請注意

- 徒手按下按鍵即可操作。
  手濕時操作無效。
- 門 * 開著時不接受操作。
  （* 僅限冷藏室門。）
- 無操作 1 分鐘時，顯示幕會自動返回待機顯示。因此若再有 1 分鐘無任何操作，顯示幕便會關閉。
- 每次開門* 時，控制面板皆會亮起，顯示目前的設定。
  （* 僅限冷藏室門與左冷凍室門。）

主要模式

温度調節

・本冰箱會自動調節温度。如有需要，亦可按如下方法調節温度。
・如需變温室預設温度的資訊，請參閱「變温室」。

冷藏室

・預設設定為 3°C。
・可按的 1℃温差在 0℃至 6℃之間調節。

程序 **顯示**

1



按下輸入鍵。

2



選擇儲藏室。　　目前設定

按下此鍵，儲藏室便會如右圖所示依序改變。

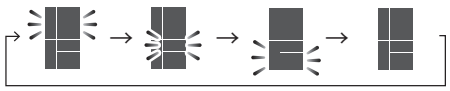

3



設定温度。

4



按下輸入鍵。

冷凍室

・預設設定為 -18°C。
・可按的 1℃温差在 -13℃至 -21℃之間調節。

程序 **顯示**

1



按下輸入鍵。

2



選擇儲藏室。　　目前設定

按下此鍵，儲藏室便會如右圖所示依序改變。

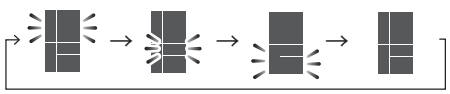

3



設定温度。

4



按下輸入鍵。

進階設定

・您可在步驟 3，依照以下方式以 0.5°C 的幅度調整温度。

如冷藏室

程序 **顯示**

3



設定温度。

再次設定温度。



ⓘ 請注意

・於控制面板上指示的温度並非是內部的確切温度。
・內部温度可能會因如冷藏位置、環境温度及開冰箱門的頻率等因素而受到影響。

温度上升記號

若內部温度如下所述變化，此標誌便會亮起。

冷藏室：10°C 以上
冷凍室：-10°C 以上

・請在入口前檢查食物的品質。
・此標誌可能會在開始供電時亮起。
　此標誌亮起時，打開或關上儲藏室選擇鍵亮起的儲藏室的門 ，即可使此標誌熄滅。

中文

主要模式

節約能源

・想讓冰箱轉換為節約能量的運轉狀態時，請使用該功能。

如何操作

	程序	顯示
1	 按下輸入鍵。	
2	 按下圖示。	▶ 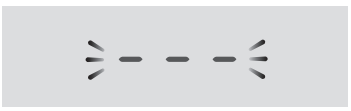 目前設定（此指示顯示 OFF。）
3	 再次按下圖示。	▶  即改變圖示。 ・按下圖示，ON / OFF 即依序改變。
4	 按下輸入鍵。	▶ 

・此模式運作時，冷藏室與冷凍室內的温度會比如下所述的正常操作還高。顯示温度未改變。

在“節約能源”模式下	冷凍室	冷藏室
	上升大約 2°C	上升大約 1°C

（當温度設定在冷凍室 : -18°C, 冷藏室 : 3°C 時）

・如果覺得飲料不夠冰涼或制冰太費時間，可取消此功能。

請注意

・節能效率取決於使用環境（周圍温度，開冰箱門的頻率，食物總量）。

空閑模式

・外出旅行或長時間離家時，請使用此模式。
・冷藏室內的温度將調節至 10°C。

如何操作

	程序	顯示
1	 按下輸入鍵。	
2	 按下圖示。	▶ 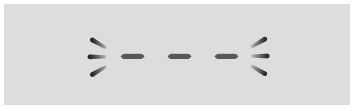 目前設定（此指示顯示 OFF。）
3	 再次按下圖示。	▶  即改變圖示。 ・按下圖示，ON / OFF 即依序改變。
4	 按下輸入鍵。	▶ 

請注意

・冷藏室中的食品保存期限約為通常運轉情形下的 1/2 至 1/3。
請僅在沒有易腐爛食品的時候使用。
・冷藏室內的温度不能調節。（顯示器上顯示的是“10°C”。）



< 待機顯示器 >

節約能量的竅門

・請將冰箱安裝於通風良好的區域並保持空間通風。
・請勿將冰箱放在陽光直射的地方或發熱機器的旁邊。
・盡量避免開門。
・請將較熱的食物涼下來以後才保存起來。
・為使冷氣充分循環，請將食品均勻地放在盤架上。

主要模式

快速冷凍

此模式用於快速冷凍食物，使其不會失去風味。食物內大部分的水分會在 -1°C – -5°C 之間凍結。應使冷凍速度加速達到 -5°C，以製作高品質的冷凍食物。

如何操作

	程序	顯示
1	放入食物。	
2	 按下輸入鍵。	
3	 按下圖示。	▶ 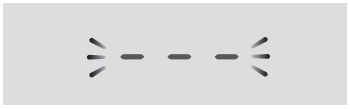 目前設定（此指示顯示 OFF。）
4	 再次按下圖示。 ・按下圖示，ON / OFF 即依序改變。	▶  即改變圖示。
5	 按下輸入鍵。	▶ 

快速冷凍約在 2~4 小時內自動結束。
（此圖示熄滅。）

請注意

・大件食物不能在單次操作中冷凍。
・由於此操作會與製冷裝置的解凍操作重疊，因此快速冷凍可能需要 4 小時以上。此操作會在解凍完成後開始。
・請儘可能避免在此模式運作時開門。
・操作音會在此模式 ON 時變得比平常更大聲，但此為正常現象。

達到最佳冷凍效果的竅門

・將食物裝入冷凍食品袋或密封容器內，以防食物上出現呈乾燥斑點狀的凍斑。
為幫助食物更快冷凍，請將食物攤薄進行包裝。
・將其攤平放入儲冰盒下的冷凍盒內。
・如果您想冷凍較大物品，則需要取下冷凍盒。

淨離子群

冰箱內的離子產生器將向冷藏室釋放出淨離子群。淨離子群是正離子和負離子的集合體。
淨離子群能不活潑空氣中浮遊黴菌。

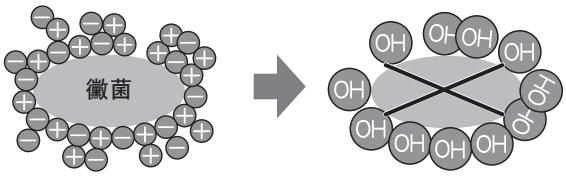

如何操作

	程序	顯示
1	 按下輸入鍵。	
2	 按下圖示。	▶ 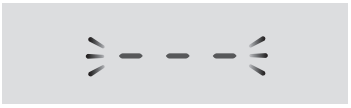 目前設定（此指示顯示 OFF。）
3	 再次按下圖示。 ・按下圖示，ON / OFF 即依序改變。	▶  即改變圖示。
4	 按下輸入鍵。	▶ 

冰箱內的指示燈（藍色）亮起。

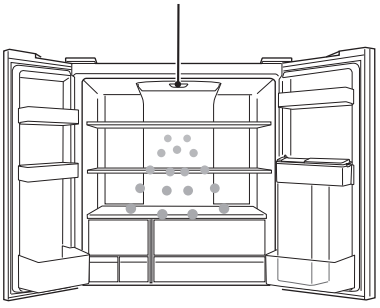

請注意

・冰箱內可能有異味。這是離子發生器產生的臭氧的味道。臭氧密度非常小，釋放到冰箱內的臭氧會迅速分解。

中文

變温室

您可選擇四種温度區域。(3°C、0°C、-8°C、-18°C)。
此室有四種不同的輔助設定。

温度區域

・預設設定為 -18°C。
・如需各温度區域適合儲藏的食物資訊，請參閱「儲藏食物」。

如何選擇

程序 **顯示**

1



按下輸入鍵。

2



選擇儲藏室。　　目前設定

按下此鍵，儲藏室便會如右圖所示依序改變。

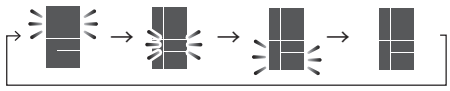

3



選擇温度區域。

按下 ，温度區域便會如下圖所示的順序變化。
(：返回)
-8.0 → 0.0 → 3.0 → -18.0

4

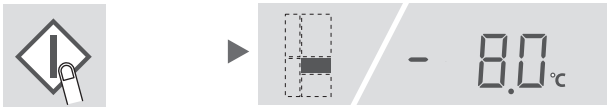

按下輸入鍵。

請注意

・於控制面板上指示的温度並非是內部的確切温度。
・所有温度區域皆不可調整。
・變温室設為 -18°C 時，其温度會隨著設定或冷凍室變化。
・內部温度可能會因如冷藏位置、環境温度及開冰箱門的頻率等因素而受到影響。

輔助模式

・請參閱下一頁的操作程序。
・所有輔助模式皆自動結束。
温度自動設為 0°C 或 3°C。
(請參閱下一頁。)
・快速製冷、强力製冷、將食物解凍及降温無法同時間操作。

模式	特點 效果／備註
快速製冷	**此模式用於快速冷卻飲料或食物。**
强力製冷	**此模式用於將冷卻飲料或食物冷卻到冰冷狀態。** 高水分的食物可能會結凍。
將食物解凍	**此模式用於將冷凍食物解凍。** 此模式便於將食物慢慢解凍。 請確定不要將易腐壞的食物完全解凍，以保留其風味或營養。
降温	**此模式可將滾燙的食物降温。** ・您想要將高温的液體食物降温時，請務必緊密密封或使用密封容器。否則可能會導致燙傷。 ・請勿將容器儲藏在其外表面温度在 60°C 以上的容器內。變温室可能會受熱而變形。

請注意

・請儘可能避免在此模式運作時開門。
・所有輔助模式會在停電時停止。從停電恢復後，温度會設為每個模式的結束温度。

變温室注意事項

・想要使用輔助模式時，請將所有食物移到另一個儲藏室。
・變更温度區域後，請至少等候 30 分鐘 (**-8°C 或 -18°C**)。變温室的温度不會立即改變。
・請勿直接將含鹽食物放在不鏽鋼盤上。不鏽鋼盤可能會生鏽。
・味道强烈的食物應以密封容器緊密包覆或儲藏，否則强烈的氣味可能會擴散到另一個儲藏室。

變温室　輔助模式

選擇模式

1 放入食物。

2 
按下輸入鍵。

3 
選擇變温室。

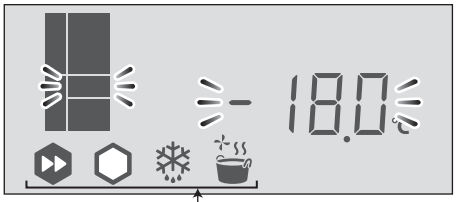

輔助模式圖示亮起。

▶ 請移至各模式的程序 4。

快速製冷

程序		顯示
4	 按下圖示。	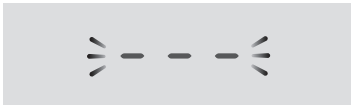 目前設定（此指示顯示 OFF。）
5	 再次按下圖示。	 即改變圖示。 ·按下圖示，ON / OFF 即依序改變。
6	 按下輸入鍵。	

運轉時間	*1	約 60 分鐘
完成此模式後的温度設定	*2	3°C

強力製冷

程序		顯示
4	 按下圖示。	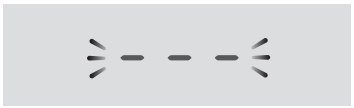 目前設定（此指示顯示 OFF。）
5	 再次按下圖示。	 即改變圖示。 ·按下圖示，ON / OFF 即依序改變。
6	 按下輸入鍵。	

運轉時間	*1	約 60 分鐘
完成此模式後的温度設定	*2	0°C

將食物解凍

程序		顯示
4	 按下圖示。	 目前設定（此指示顯示 OFF。）
5	 再次按下圖示。	 即改變圖示。 ·按下圖示，ON / OFF 即依序改變。
6	 按下輸入鍵。	

運轉時間	*1	約 6 小時
完成此模式後的温度設定	*2	3°C

降温

程序		顯示
4	 按下圖示。	 目前設定（此指示顯示 OFF。）
5	 再次按下圖示。	 即改變圖示。 ·按下圖示，ON / OFF 即依序改變。
6	 按下輸入鍵。	

運轉時間	*1	約 30 ～ 90 分鐘
完成此模式後的温度設定	*2	3°C

***1** 此項操作與製冷裝置的解凍操作重疊時，由於此模式會在解凍完成後啓動，因此需要更長的時間才能完成。

***2** 取消後的温度設定仍相同。

中文

其他設定

選擇模式

適用模式

- 飲水機鎖定 < 限於 SJ-FX660W>
- 門警報關閉模式
- 聲響關閉模式
- 控制面板鎖定

1 

按下輸入鍵。

2 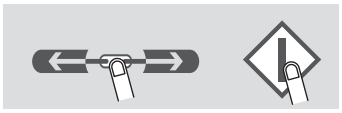

按住輸入鍵並按下選擇鍵，直到蜂鳴器響起。

所選的圖示閃爍。



→：按下 ，圖示便會如下圖所示的順序變化。
（ ：返回）

< 限於 **SJ-FX660W** >

飲水機鎖定

・使用此模式防止兒童或他人不慎使用飲水機。

程序 顯示

3 

選擇圖示。

4 

按下輸入鍵。 目前設定

5 

・按下選擇鍵，ON / OFF 便會依序切換。

6 

按下輸入鍵將模式設為 ON。

門警報關閉

・使用此模式將門警報切換成 OFF。
・使用此模式將飲水機門切換成 OFF。
< 限於 SJ-FX660W>

程序 顯示

3 

選擇圖示。

4 

按下輸入鍵。 目前設定

5 

・按下選擇鍵，ON / OFF 便會依序切換。

6 

按下輸入鍵將模式設為 ON。

聲響關閉

・使用此模式將控制面板的聲響與製冰盒清潔結束音切換成「關閉」。

程序 顯示

3 

選擇圖示。

4 

按下輸入鍵。 目前設定

5 

・按下選擇鍵，ON / OFF 便會依序切換。

6 

按下輸入鍵將模式設為 ON。

其他設定

控制面板鎖定

・使用此模式防止兒童或他人不慎使用控制面板。

程序 顯示

3



選擇圖示。

4



按下輸入鍵。 目前設定

5



・按下選擇鍵，ON / OFF 便會依序切換。

6



按下輸入鍵將模式設為 ON。

如何取消控制面板鎖定

程序 顯示

1



輕觸輸入鍵 3 秒或以上。

2



選擇 OFF。

3



按下輸入鍵將模式設為 OFF。

中文

自動製冰機

各部位名稱

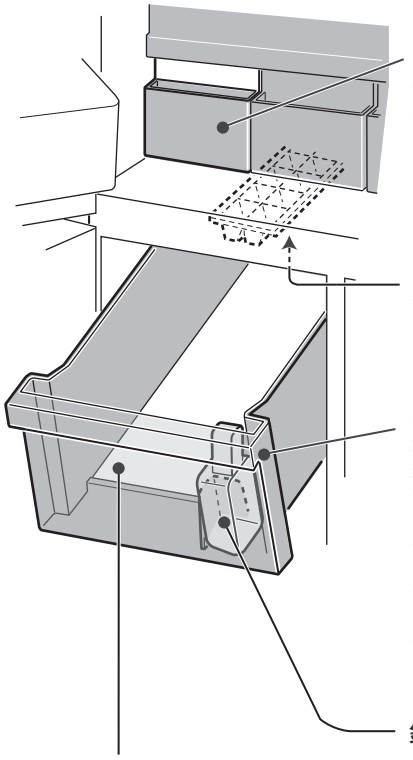

水箱
容量：約 1.8 L
水温上限：60°C

製冰盒
製冰盒位於後面的上半部。
（無法拆下）

儲冰盒
拉儲冰盒時，儲冰盒會稍微傾斜，於是冰塊便會滑到前半部。

冰塊儲量（最大值）
正常大小的冰塊
：約 232 塊
大冰塊
：約 112 塊

鏟子

消音墊片
消除冰塊的掉落聲。
請勿丟棄此墊片。

如何製作冰塊

給水
- 水從水箱輸送至製冰盒。

製冰
- 製作冰塊
（一次 8 塊）
- 每次行程的冰塊數可能會改變。

釋放
- 製冰盒旋轉即可釋放冰塊，並回到「供水」狀態。
- 儲冰盒已滿時，製冰盒不會旋轉。

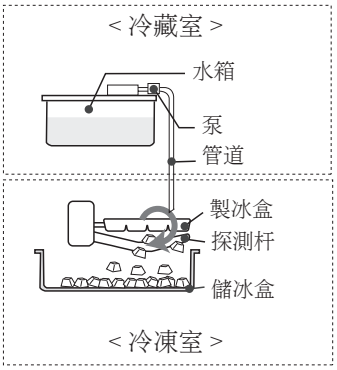

探測杆
以此檢測桿定期檢查冰塊容積。

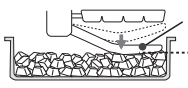

若冰塊不滑順，冰塊容積可能會減少。

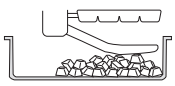

（約一半容積）

製冰

您可選擇如下所述的兩種大小。

模式	圖示	每次製冰所需的時間
正常大小的冰塊		約 2 小時
大冰塊		約 3.5 小時

請注意
- 如上所述的製冰時間僅是在環境温度 30°C 下的約略指示，温度調整設為初始設定（冷藏室：3°C，冷凍室：-18°C），節能關閉且未打開或關上門。

如何操作

- 所有製冰模式的預設設定為 OFF(- - -)。

程序 **顯示**

1



按下輸入鍵。

2



按下圖示。

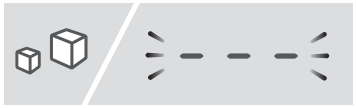

目前設定
（此指示顯示 OFF。）

3



再次按下圖示。



目前設定
（此指示顯示正常的冰。）

即改變圖示。

- 按下圖示，即依序改變冰塊大小。

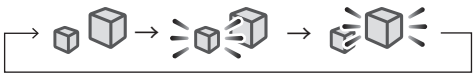

4



按下輸入鍵。



自動製冰機

如何使用

使用前

・請清洗水箱與儲冰盒。
・使用製冰盒清潔模式清潔製冰盒與管路。
（自動製冰機內部可能會有氣味或髒汙。）

程序

1. **將水倒入水箱，並設定水箱。**

> **警告**
> **僅可添加飲用水。**

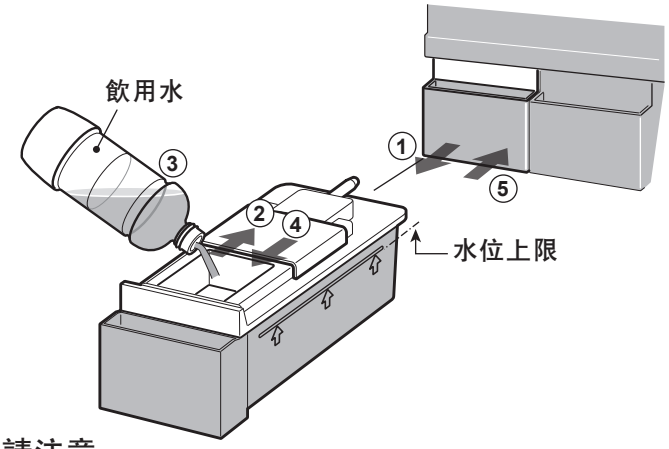

請注意

・步驟 ③ ：請勿使用飲用水以外的飲料。（果汁、茶、蘇打及運動飲料等）這些飲料可能會使製冰機內部髒汙，導致製冰機故障。
・步驟 ⑤ ：請勿傾斜水箱，否則水可能會在您攜行時濺出。
・步驟 ⑤ ：請確實插入水箱。除非完全插入水箱，否則不會製作冰塊。

↓

將會自動製作冰塊。

2. **取出冰塊。**

・同時製作 2 種冰塊。


冰塊


多面體形狀

・冰塊會堆積在儲冰盒的後半部。
請將冰塊往前半部鋪平，以製作更多冰塊。

如何組裝或拆解水箱

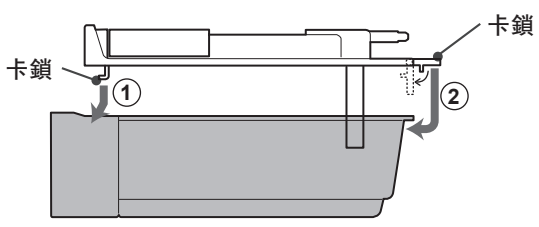

・上圖指出如何組裝水箱。請以相反順序拆解。

請注意

・製作第一組冰塊約需 24 小時。
・為了衛生緣故，即使水箱內仍有水，亦請每週裝水一次。
・請大約每週拆下水箱一次並用水清洗。
・水箱空的時候，有時可能會發出吱嘎聲，但此為正常現象。
・請勿將鍋鏟或食物放在冰塊上方。這可能導致自動製冰機故障（偵測桿受損等）或無法拉出的情況。請將鍋鏟放置於指定的位置。

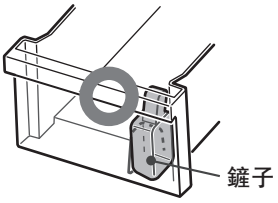



・即使選擇大冰塊模式，水箱水位不足時，可能無法製作大冰塊。

冰塊內的白色物質及漂浮物質

・水內的礦物質可能會在水結凍時固化變白。礦物質會在冷凍時變成不可溶的狀態，因此冰塊融化時只會留下白色的漂浮物質，但此為正常現象。
・您使用硬水時更可能發生此現象（例如：水的硬度在 100mg/L 以上）。

發生以下情況時，製冰時間會變得更久：

・室溫高的時候。
・較少製冷操作，如在冬季時。
・儲藏許多食品。
・冰箱的製冷裝置解凍。
・經常開門。
・重新啓動製冰操作時。
・節能模式運作時。

在變更模式後立刻製冰

・在變更運作模式後立刻製作的那批冰塊，並未反映出大小改變。
這是因為在切換成變更的模式時，製冰盒內仍有做到一半的冰塊。第二批或之後的冰塊會反映出模式變更。

冰塊突出的部分：製冰盒內有些狹縫

・因此冰塊可能因這些狹縫而有突出的部分。
・突出的部分可能是尖形。直接吞入冰塊時請小心。

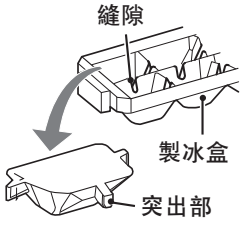

自動製冰機

取消製冰

・取消製冰
・您可將儲冰盒當成是冷凍盒使用。

如何操作

程序　　顯示

1



按下輸入鍵。

2



按下圖示。　　目前設定
（此指示顯示正常的冰 ON。）

3



再次按下圖示。



再次按下圖示。　　即改變圖示。

・按下圖示，即依序改變冰塊大小。

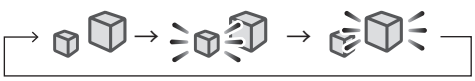

4



按下輸入鍵。

5 淨空水箱。
請徹底晾乾並裝回原始位置。

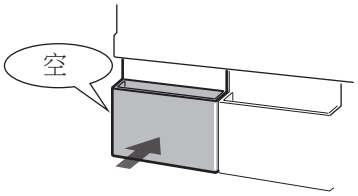

取消製冰後

・即使取消製冰模式，由於製冰機會進行一次釋出冰塊的動作，因此製冰盒與偵測桿仍會運作。
・請在取消製冰後等候 5 小時，再將食物放入儲冰盒內。

再次開始操作

・請參閱「**製冰**」。

製冰盒清潔

・此模式用於清潔製冰盒及管路。
・使用此模式時：首次製冰之前，或冰箱長時間未使用時。
・强行從水箱供水至製冰盒。
・清潔後的出水量將為 100mL。
然而，大冰塊模式設為開啓時，出水量將為 230mL。

準備工作

・將水倒入水箱，並設定水箱。
・淨空儲冰盒。

如何操作

程序　　顯示

1



按下輸入鍵。

2



按下圖示。　　目前設定
（此指示顯示 OFF。）

3



再次按下圖示。　　即改變圖示。

・按下圖示，ON / OFF 即依序改變。

4



按下輸入鍵。（製冰盒清潔開始。）

・約耗費 40 秒的時間。
請勿在運作時拉出儲冰盒。

清潔中

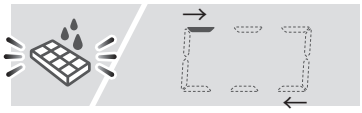

完成 ♪♪



5 請再次依照步驟 3 至 4 進行。

6 按下輸入鍵即可完成。請倒光儲冰盒內的水。
請徹底晾乾並裝回原始位置。

請注意

・製冰設定會在清潔完成後恢復成之前的狀態。

飲水機 < 限於 SJ-FX660W >

各部位名稱

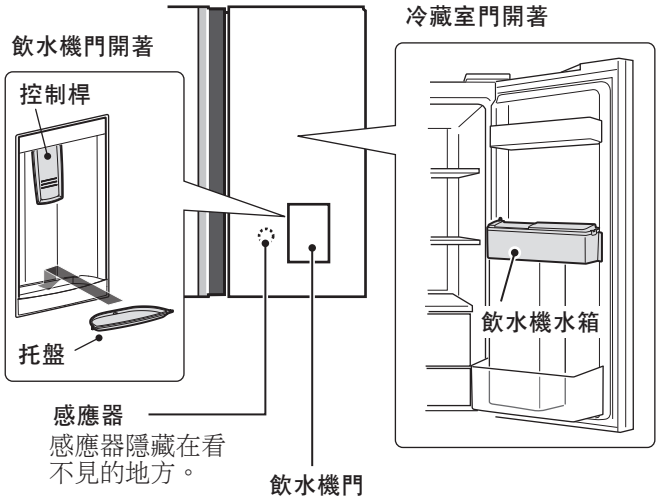

飲水機門

・觸摸感應器，打開飲水機門。
（飲水機門會在數分鐘內自動關上。）
想關閉飲水機門時請輕觸感應器，直到聲音響起為止。
・飲水機門警報會在關上之前響起。
（您可藉由「門警報 OFF」模式取消警報。）
・當蜂鳴器響起時觸摸感應器或打開冷藏室門或冷凍室門（左），即可延長飲水機門的打開時間。

若物體或您的手在飲水機門旋轉時被飲水機門夾住。
・飲水機門半開後停住。
（飲水機門過了一會才自動關上。
觸摸感應器，再次打開飲水機門。）

若飲水機門的動作因停電而停止。
・飲水機門於供電恢復後自動關上。

警告
・請勿強行打開飲水機門。
・請勿觸摸旋轉中的飲水機門。

鎖定飲水機門

使用此模式防止兒童或他人不慎使用飲水機。
（請參閱「其他設定」。）

如何使用

使用前

拆下飲水機水箱並清洗之。
（如需如何拆下的資訊，請參閱「清潔飲水機水箱」。）

程序

1. 將水倒入飲水機水箱。

警告
僅可添加飲用水。

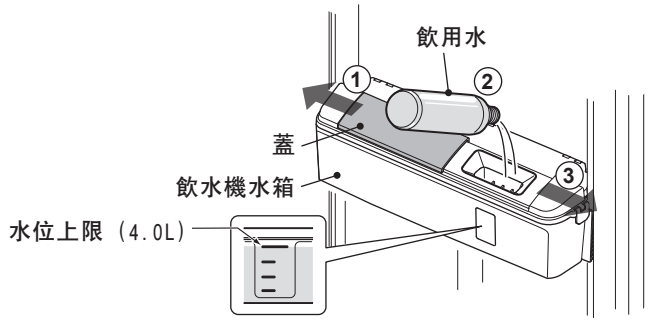

請注意

・請確定在倒水之前，已安裝飲水機水箱。
・請確定蓋上蓋子，否則可能會在關門或開門時濺水。
・請勿使用飲用水以外的飲料。若使用如果汁等其他液體，可能會導致故障。
・水温上限為 50°C。

2. 將水倒入玻璃杯中。

①. 輕觸感應器以開啓飲水機門。

②. 以玻璃杯壓下拉桿。（倒水。）

③. 拿出玻璃杯。（水停止。）

④. 輕觸感應器直到聲音響起為止，以關閉飲水機門。
（即使未輕觸感應器，飲水機門也會自動關閉。）



請注意

・使用後，將玻璃杯放在飲水機下方幾秒鐘，以便接到每一滴水。
使用飲水機後，可能會流下幾滴水。
（特別是向空飲水機水箱注水後，滴水可能會增加。）
・為了衛生緣故，即使飲水機水箱內仍有水，亦請每週裝水一次。 按下拉桿，讓飲水機水箱中的水全部流出。
・請經常倒掉托盤內的水，否則水可能會溢出。
・若飲水機長時間未使用，請徹底清潔並晾乾飲水機水箱，然後裝回原本的位置。
・請勿將玻璃杯或物體放在托盤上。

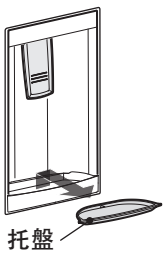

中文

飲水機

清潔飲水機水箱

請大約每月拆下飲水機水箱一次並用水清洗。

1. 淨空飲水機水箱。

按下拉桿，讓飲水機水箱中的水全部流出。

2. 從門拆下飲水機水箱。

①. 拆下兩個卡鎖。

②. 將飲水機水箱向上抬起拆下。

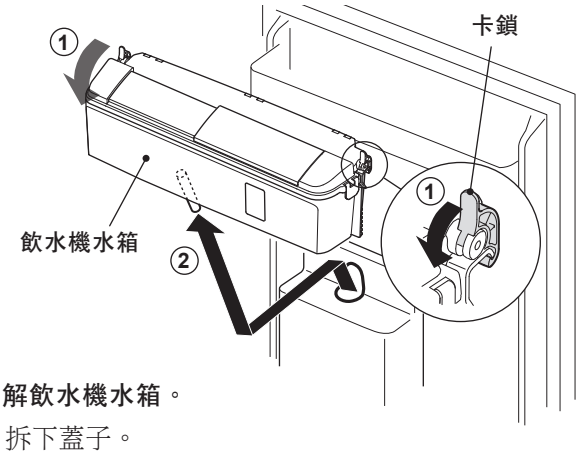

3. 拆解飲水機水箱。

①. 拆下蓋子。

②. 拆下護蓋。（卡鎖：5 件）

③. 拆下水箱管路及水箱噴嘴。

④. 拆解水箱噴嘴。

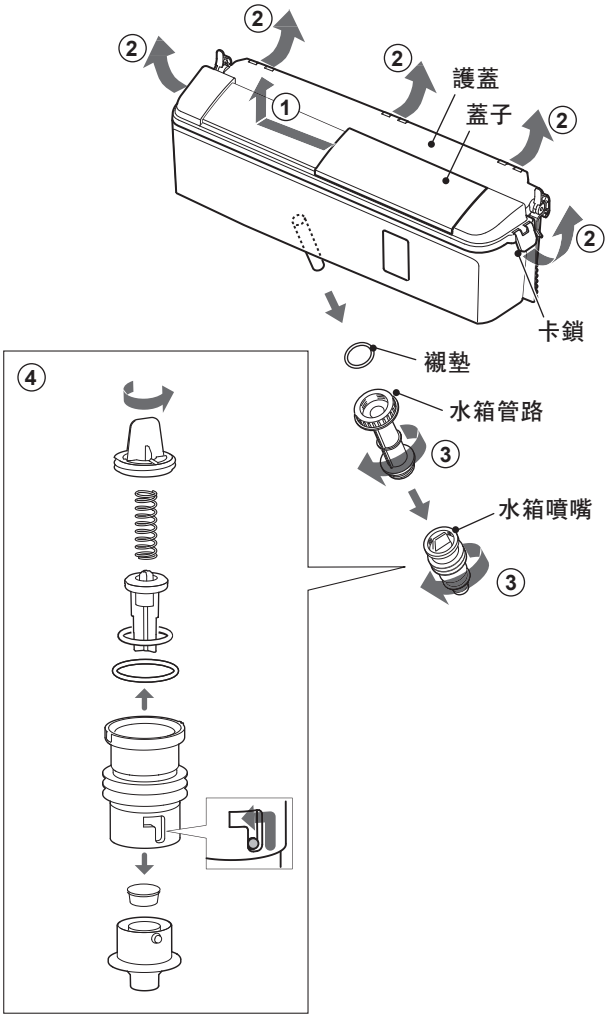

清潔後

1. 組裝飲水機水箱。

（以相反程序拆解。）

請確定確實裝上每個零件，否則可能會導致漏水。

組裝水箱噴嘴。

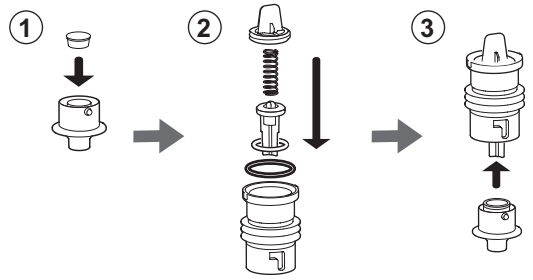

2. 安裝飲水機水箱。

將水箱完全插入並確定栓緊卡鎖，以便安裝。

必須安裝飲水機水箱後方可使用。
否則，冰箱內側可能會結露。

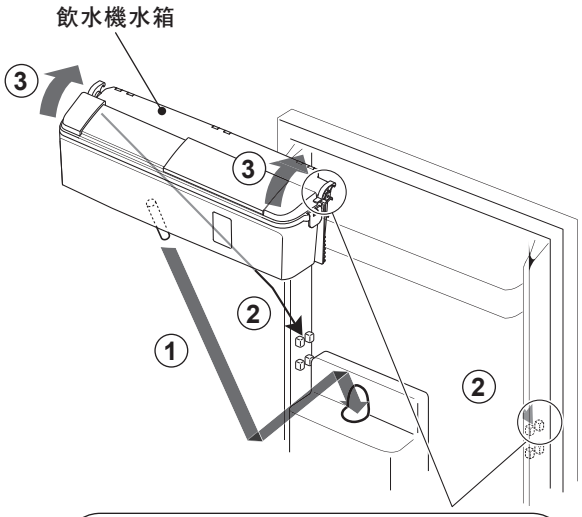

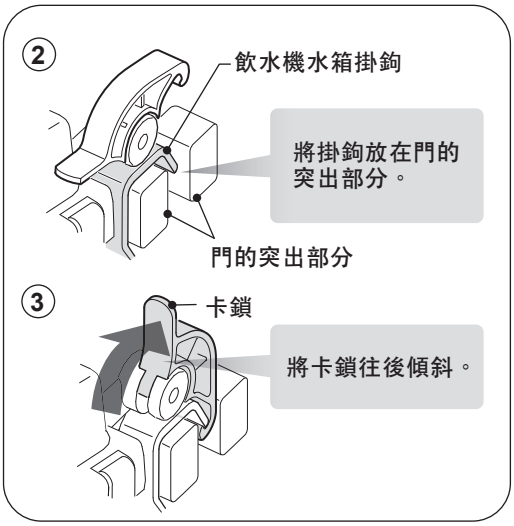

請注意

- 濕度高時，水箱管與水箱噴嘴上可能會結露。
- 拆解水箱時，請確定不要遺失襯墊。

保養

重要提示

請依照以下提示，避免塑膠組件的內部表面裂開。

- 食用油沾上塑料部件時，請將之擦掉。
- 某些家用化學洗滌劑可能會導致冰箱損傷，因而只能使用稀釋過的廚房用洗滌劑（肥皂水）。
- 如果使用未稀釋的洗劑或者未徹底擦淨肥皂水，則有可能損壞冰箱的塑料部件。

清潔

環境衛生靠大家，請確認下列工作有定期執行。

- 拆下冰箱櫃體或門上的附件，如盤架。用温水和廚房用洗滌劑清洗，然後，用水洗清並使之乾透。
- 冰箱內部要用浸泡在廚房用洗滌劑的温水裡的布塊擦洗。然後，用冷水將肥皂水徹底擦乾淨。
- 冰箱的外殼沾上污漬時，請用柔軟的布塊擦洗。
- 冰箱門環要用廚房用洗滌劑的温水和牙刷洗淨。

請注意

環境衛生靠大家，請確認下列工作有定期執行。

- 請勿使用强力清潔劑或溶劑（油漆、塗料、抛光粉、汽油、沸水等），否則可能導致冰箱損傷。
- 一旦拔出電源插頭，請等待至少 5 分鐘之後再重新接通電源。
- 一塊玻璃盤架約重 3kg。從箱內抽出或搬運時請小心托牢。
- 在冰箱內請勿使物體掉落，或用物體强烈碰撞內壁。否則可能導致內壁破裂。
- 以下圖中的陰影部分是無法拆下的部分。

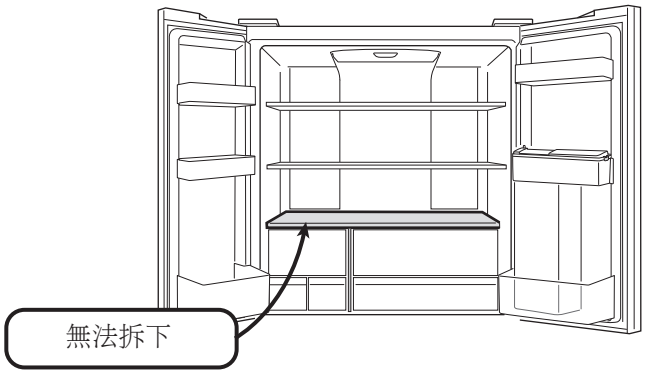

切斷冰箱的電源時

如需將冰箱長時間關閉，應遵循以下步驟以減少霉菌增長：

1. 將食物全部取出。
2. 將電源插頭從插座中拔出。
3. 將內部徹底清潔並乾燥。
4. 將全部的門稍微開啓數天進行乾燥。

製冷裝置解凍

本冰箱透過獨特的節約能源系統，完全實現自動除霜。

當冷藏室內燈損壞時

請聯繫 SHARP 認可的售後服務中心更換內燈。非專業服務人員不得更換內燈。

送修之前的初步檢查

送修之前，請對下列地方進行檢查。

一般問題

問題	解決方法／情況
冰箱根本不製冷。 （控制面板如下顯示。） 	冰箱被設定在“示範模式”（圖示依序亮起）。 按照步驟 1 至 2 取消此設定。 嗶嗶嗶 **取消運行** 1. 開啓冰箱門。 2. 在冰箱門開啓時按住輸入鍵 5 秒或更久。
冰箱外箱有時會變熱。	這並非異常。防止結露的熱導管裝在機身的內部。
門把手和飲水機門 < 限於 SJ-FX660W > 周圍在觸摸時很燙。	這並非異常。 防止結露的加熱器裝在門內部。 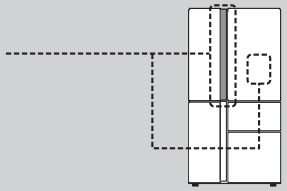
冰箱發出吵雜噪音。	冰箱如發出下述聲音，這並非異常。 ·運轉開始時，壓縮機發出較大的噪音 －－－ 不久聲音會變小。 ·壓縮機每日一次發出較大噪音 －－－ 緊隨製冷裝置自動除霜操作之後發出的運轉聲。 ·液體流動的聲音（咕嚕聲、嘶嘶聲） －－－ 冷媒在管道內流動的聲音（聲音時而會變得較大）。 ·劈啪聲或吱嘎聲，吱吱聲 －－－ 冷卻時內壁和內部零件膨脹和收縮的聲音。
冰箱內部和冰箱外側結霜或結露。	在下列情形下有可能發生這種現象。請用濕布擦掉霜，用乾布擦掉露珠。 ·周圍溫度較高時。 ·頻繁開啓冰箱門時。 ·冰箱內存放水分較多的食品時。（請用保鮮膜包上）
冷藏室的食品結凍。	·冰箱温度是否長時間控制在 0°C ？ — 將温度調節調至 3℃以上。 ·冷凍室温度是否長時間控制在 -21°C ？ — 將温度調節調至 -18℃以上。 ·在環境温度較低時，即使將冷藏室温度調節控制到 6℃，食品有時也會被凍結。
冰箱內部有異味。	·請將氣味較强的食品用保鮮紙包起來。 ·脱臭裝置不能去掉所有異味。
如果門警報器不停止發出警報。	·門關閉後，警報將停止。
控制面板不工作。	在以下情況下可能出現此情形。 ·面板或手指被液滴、油脂等所玷污。 ·觸碰面板時，請佩戴手套或是在手指、指甲或其他物體上粘貼創可貼。 ·膠紙或膠帶附著於按鍵上。 ·觸碰位置應稍稍偏離按鍵。 ·操作時間不足導致按鍵無法正常工作。

送修之前的初步檢查

製冰

問題	解決方法／情況
製冰器不能做出冰塊。	·水箱中有水嗎？ ·水箱是否放置好？ ·您是否將鏟子或其他食品遺留在儲冰盒中？ ·是否所有製冰模式都設置為「OFF（關閉）」狀態？ ·冰塊是否都堆積在儲冰盒的後面？（將冰塊放置均勻。） ·嘗試製冰盒清潔操作。如果製冰盒清潔操作正常，請等一天。又可以製冰了。 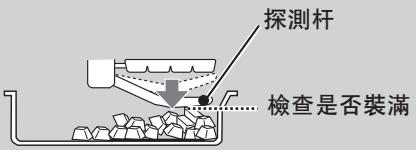
冰塊製作慢	·製冰操作是否剛剛重啓？ ·是否剛在水箱中注入飲用水？
冰塊很小，變圓或連在一起。 冰塊中有突起或小孔。	·若水箱的水位較低，冰塊可能會比平常的小。 ·如果冰塊已儲存很長時間，則冰塊有可能變小，變圓或連在一起。 ·您可能會看到的突起源自製冰盒中的縫隙。 ·小孔源自冰塊中的氣泡。氣泡可能會連起來形成更大的孔。
冰塊有異味。	·水箱中的水是否時間過長或有異味？ ·水箱中是否殘留有用於清潔水箱的清潔劑或漂白劑？ ·如果冰塊長時間不使用，異味可能會轉移到其他冰塊。
即使進行「**製冰盒清潔**」操作也沒有水或冰塊出來。	·儲冰盒是否裝滿了冰塊？你是否將鏟子或其他食品遺留在儲冰盒裡？（清空儲冰盒） ·水箱中有水嗎？

飲水機 < 限於 SJ-FX660W >

問題	解決方法／情況
沒有水流出。	·是否確實安裝水箱？ ·水箱內是否有水？
飲水機門未開啓。	·飲水機門鎖定是否「ON」？
托盤內仍有水。	·有些水可能會從飲水機或內部管路流出。此為正常現象。請倒掉水。

經檢查後仍需要送修時

·請與就近的 SHARP 認可的售後服務中心洽詢。

SHARP

SHARP CORPORATION

TINS-C071CBRZ 21FK TH ①