KÜHL-/GEFRIERSCHRANK
REFRIGERATOR FREEZER UPRIGHT
REFRIGERATEUR/CONGELATEUR

AEG

SANTO 3900 E
SANTO 3900 KK
ARCTIS 3100 GANF
SANTO 3300 KGNF
SANTO 3700 PW

Gebrauchsanweisung
Instructions for use
Mode d'emploi

AUS
ERFAHRUNG
GUT

CONTENTS

1. Before starting the refrigerator/freezer.
2. How to use the appliance.
3. General advice on the use of the appliance.
4. Maintenance.
5. Disposal of the appliance.
6. Has the appliance stopped working?
7. Safety.
8. Technical data.
9. Installation.
10. Change of hinge side.

1. BEFORE STARTING THE REFRIGERATOR/FREEZER

Check that the cabinet is undamaged. Please report any transport damage **immediately** to your dealer.
Wash the cabinet and inner lining with a mild unscented detergent and wipe it dry. Do not use abrasive scouring powder, steel wool or similar.
Connection to the electricity supply: See head (7) and (8).

2. HOW TO USE THE APPLIANCE

Operating panel: See fig. (1) page 13.
1. Lamp for the refrigerator section.
2. Thermostat knob for the refrigerator section.
3. Thermostat knob for the freezing section.
4. Indicator for the connection to the electricity supply (green).
5. Indicator for deep-freezing (yellow).
6. Button for deep-freezing.
7. Thermometer for the freezing section.
8. Warninglamp.

The thermostat knob is adjustable from 0 (stop) to 7 (coldest). For model SANTO 3900 E: the thermostat knob in position 0 only stops the compressor. To stop the inside fan and to switch off the light you have to switch off the appliance at the wall socket.
Find the position of the thermostat which gives you the desired temperature. Start at position 4.

The refrigerator section
Never store hot foodstuffs in the cabinet and remember always to wrap up the foodstuffs.
The evaporator of the refrigerator section is automatically defrosted. The defrost water is led to a tray on top of the compressor where it evaporates.

The freezing section
Operating panel. See fig. (1) page 13.
Deep-freezing: Push the button (6). The yellow indicator will then glow. It stops glowing when the button is pushed anew. When the quantity of foodstuffs to be frozen is larger than 3 kg the button for deep-freezing should be pushed about 24 hours before the desired freezing.
The button is pushed anew when the foodstuffs are frozen.

It is important that the deep-freezing takes place as quickly as possible. Therefore, the temperature of the foodstuffs should be no higher than room temperature.

Otherwise follow the advice given in handbooks on deep-freezing and the choice of packing material.

Place the foodstuffs so that they obtain maximum contact with the freezing shelf. Open the door only when necessary. The lamp of the alarm knob, fig. (1) page 13, indicates whether the acoustic alarm is on. If the lamp is lit the acoustic alarm will sound if the temperature is too high.

Please note that the water ices, if consumed immediately after removal from the freezer compartment may result in a freezer-burn, and they should be allowed to warm slightly before consumption.

3. GENERAL ADVICE ON THE USE OF THE APPLIANCE

The shelves in the refrigerator section can be moved, fig. (5) page 13.
The door rack and the butter- and cheese-boxes are also movable, fig. (2 + 3) page 13.

The freezing shelf cover should be closed. The covers are opened by pulling, fig. (6) page 13.
To remove the baskets lift them over the stop pins, fig. (4) page 13.
If the cabinet is not to be used for more than 48 hours the doors should be left open to avoid ill smells.
The appliance is equipped with a high-quality skin condenser.
Therefore, a slight heating of the sidewalls is quite normal.

Lighting
This appliance is equipped with a device which causes the light to switch off if the door is open / left ajar for abnormally long time.
When the door has been closed for a couple of minutes, the device is cut off and the light switches on in normal way again.

Important!
In case of damage to the power cord it must be replaced by a power cord of corresponding type, available from the manufacturer or his service representative.

4. MAINTENANCE
Only use an unscented detergent when cleaning the cabinet inside.
Switch off the appliance and pull out the plug when cleaning the cabinet.
The skirting board can be removed to faciliate a vacuum cleaning of the floor. See fig. (1) page 12. Please be careful if the appliance is equipped with a compressor fan. Remember to clean the drain in the refrigerator section also.

5. DISPOSAL OF THE APPLIANCE
The appliance contains recyclable materials. When disposing of the appliance, please contact the technical administration or other appropriate authority in your municipality. They can inform you of the collection and recycling measures used in the municipality.

6. HAS THE APPLIANCE STOPPED WORKING?
Before calling a repairman, check that the plug is properly plugged into the wall socket.
The fuse is intact.
The power has not been cut off.
All controls are correctly set.
The quantity of foodstuffs in deep-freezing is not too large.
Switch off the cabinet for 15 minutes (for instance at the thermostat). Switch it on again and after 5 minutes check whether frost has formed on the evaporator.
Do not open the cabinet when unnecessary. If the break appears to stretch over a longer period (over 12 hours) store the foodstuffs, if possible, in another freezer. Most foodstuffs, if thawed on the outside but otherwise hard, can be re-frozen.

7. SAFETY
Do not store explosive substances in the refrigerator section, such as gas, cigarette lighters, petrol, ether or similar.
Scrapped cabinets may become dangerous to children at play. Therefore, remove the doors or place the scrapped cabinet in such a way that children cannot enter it.
Never store liquids with carbon dioxide in the freezing section.

8. TECHNICAL DATA
This appliance meets the provisions of the following directives: 89/336/EEC (electro-magnetic compatibility), 73/23/EEC (electrical equipment designed for use within certain voltage limits) as amended. Household appliances sold in the EU also meet 96/57/EEC (energy efficiency requirements) as amended.
The rating plate, which is placed either at the back or inside the appliance, see fig. (7) page 13, provides various technical information as well as type and serial number.

9. INSTALLATION

See drawings (1) and (2) page 12.
Install the cabinet in a dry place and so that it is not exposed to direct sunlight or any other source of heat.
Place the cabinet in a level position. This is easily achieved by adjusting the adjustable feet at the front edge of the base. The cabinet should not rest against a wall on its hinged side. When placing the cabinet on a carpet or on a wooden floor you should adjust it once more after some time as the cabinet might settle in soft foundations.
The cabinets can be built in or put side by side, see fig. (2b) page 12.
KF models put side by side with other models require a distance of 2 inches between the appliances.
For sufficient airflow around the cabinet it is necessary to have a 4inches high air duct right above the appliance, see fig. (2a) and (2b) or an air duct that leeds the air up over the top cupboard, see fig. (2c).
Make sufficient space for door opening as to draw the baskets out, see fig. (2e).
The dimensions for building in are noted on the drawings.
During a storm the electricity supply might be cut off.
You should be aware of this when installing the appliance in weekend cottages or elsewhere where you would not immediately observe that the power has been cut off.
Construction and details in the accessories are subject to alteration without previous notice.

If the cabinet is to be adjusted:
See drawings (1) page 12
Take hold of the front panel with both hands. Then lift up the front panel and turn out the bottom part.

Adjust the tilt of the unit
See drawings (1) page 12
by turning the adjustable feet with a 13 mm spanner.

10. CHANGE OF HINGE SIDE

See drawings page 14.

1. Dismantle the top hinge. This one is to be used later as top hinge at the opposite side. Lift off the top door.
2. Dismantle the middle hinge. Lift off the bottom door. Mount the hinge screws again.
3. Dismantle the screws in the middle of the new hinge side. Mount the bottom door and screw on the middle hinge.
4. Remove the kick panel.

a) Only for appliances with a door closer on the bottom door. The door closer is moved to the second hole.
b) The bottom hinge is dismounted at the 3 screws. The hinge is turned 90° and mounted on the opposite side.

5. Adjusting the bottom door: Loosen the 3 screws in the bottom hinge and push the bottom hinge to the required side. Tighten the screws and mount the kick panel.

6) The kick panel is mounted and the hole plugs are mounted on the opposite sideg.

7. Ajustment of the top door: loosen the screws in the hinge above the door, loosen the hinge above the door and turn the hinge to the wanted side. Tighten the screws.
8. Move the handle.

DISPOSAL OF THE APPLIANCE

The appliance contains recyclable materials. When disposing of the appliance, please contact the technical administration or other appropriate authority in your municipality. They can inform you of the collection and recycling measures used in the municipality.

Einstellung der Tür
Wenn die Tür an die Fußleiste stößt, kann dies durch Justierung der Füße wie auf der Zeichnung gezeigt abgeholfen werden.

Adjusting the door
If the door bumps against the bottom panel, this can be remedied by adjusting the feet as shown on the drawing.

Ajustage de la porte
Si la porte se cogne sur la cache-socle, ceci peut être remédié en ajustant les pieds comme illustré sur le dessin.

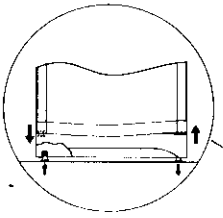

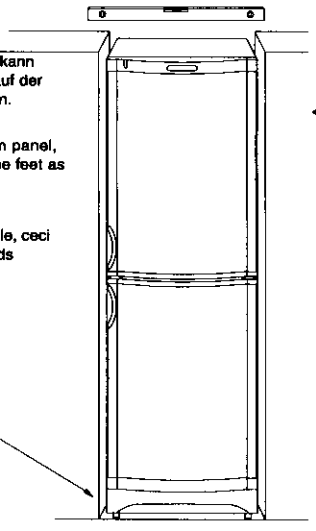

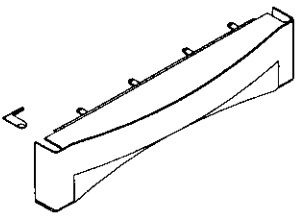

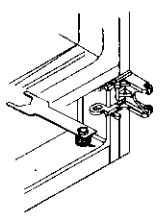

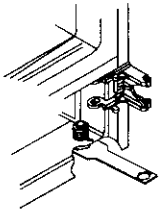

Fig 1.

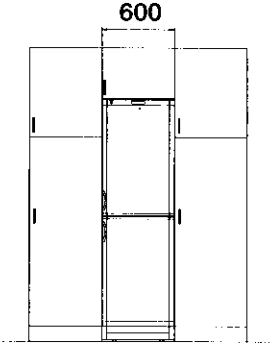

Seite an Seite
Bei allen Kühl-/Gefriermodellen:
Wenn 2 Geräte neben einander gestellt werden, muss der Abstand zwischen ihnen mindestens 30 mm sein. Der Mindestabstand zu anderen Wärmequellen muss ebenfalls 30 mm sein.

Side by side
Concerns all fridge/freezer models:
If 2 appliances are to be placed side by side, the minimum distance between these must be 30 mm. The distance to other sources of heat must also be at least 30 mm.

Côte à côte
Pour tous modèles réfrigérateurs/congélateurs:
Si 2 appareils sont placés côte à côte, il faut qu'il y ait une distance minimum de 30 mm entre ceux-ci. La distance doit également être 30 mm au.

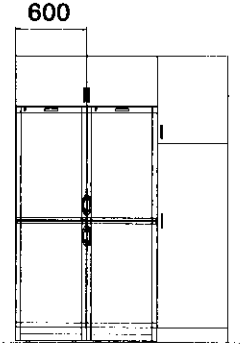

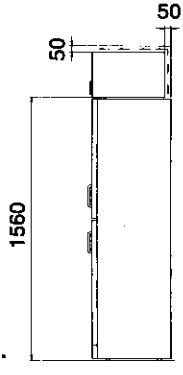

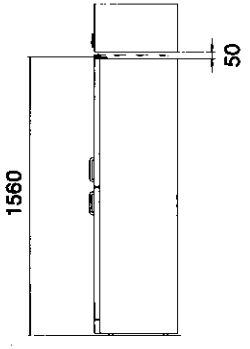

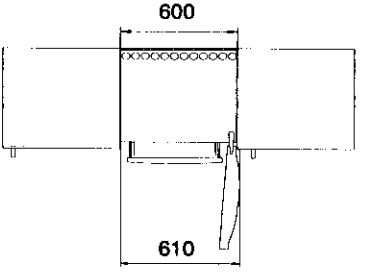

Fig 2.

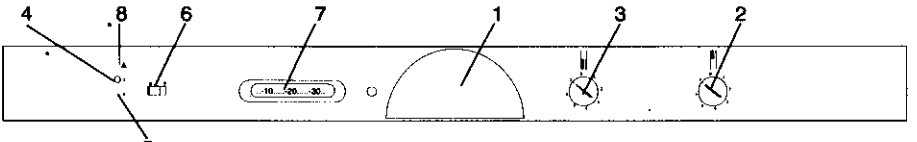

Fig 1.

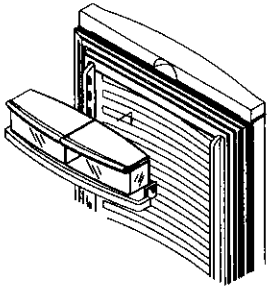

Fig 2.

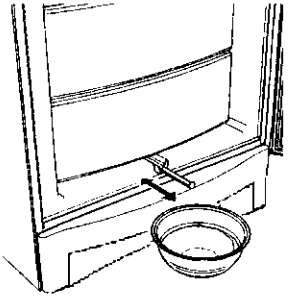

Fig 3.

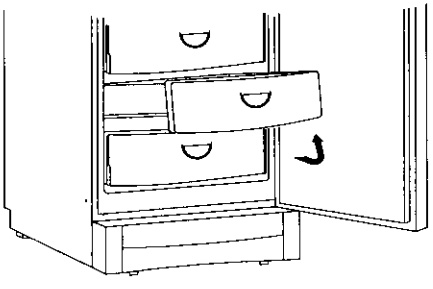

Fig 4.

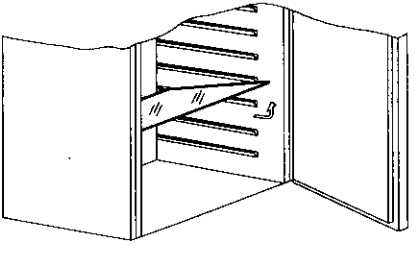

Fig 5.

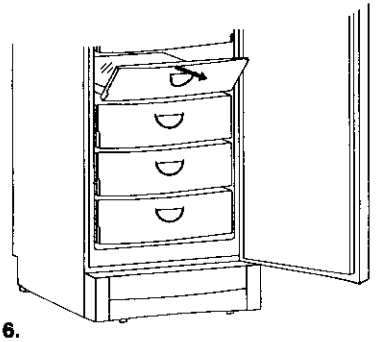

Fig 6.

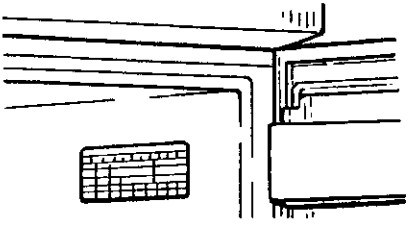

Fig 7.

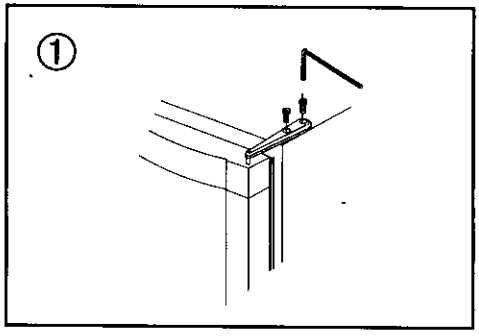
①

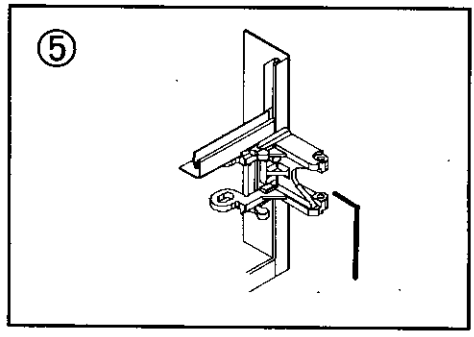
⑤

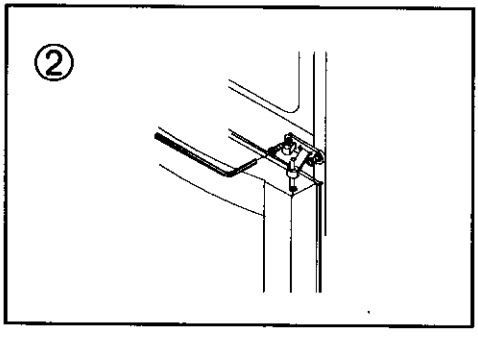
②

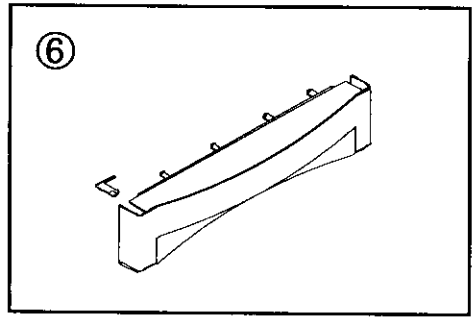
⑥

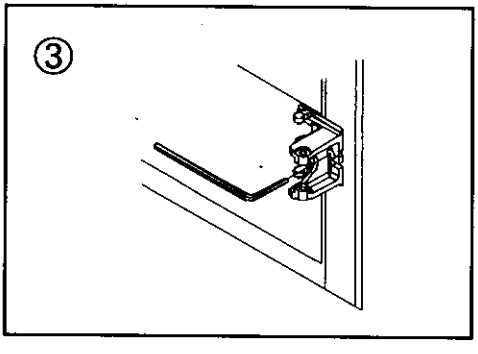
③

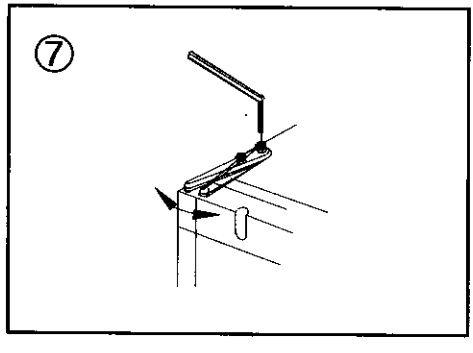
⑦

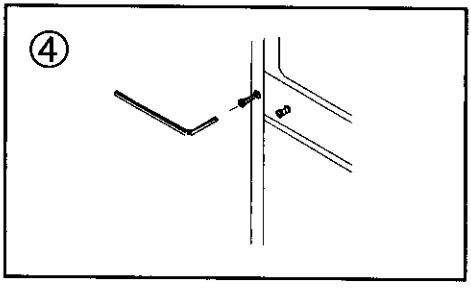
④

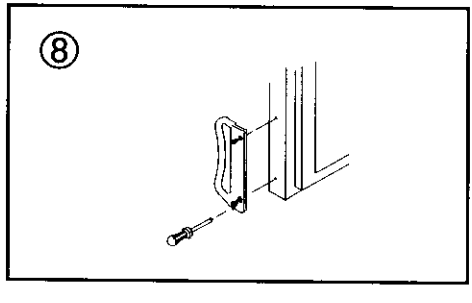
⑧

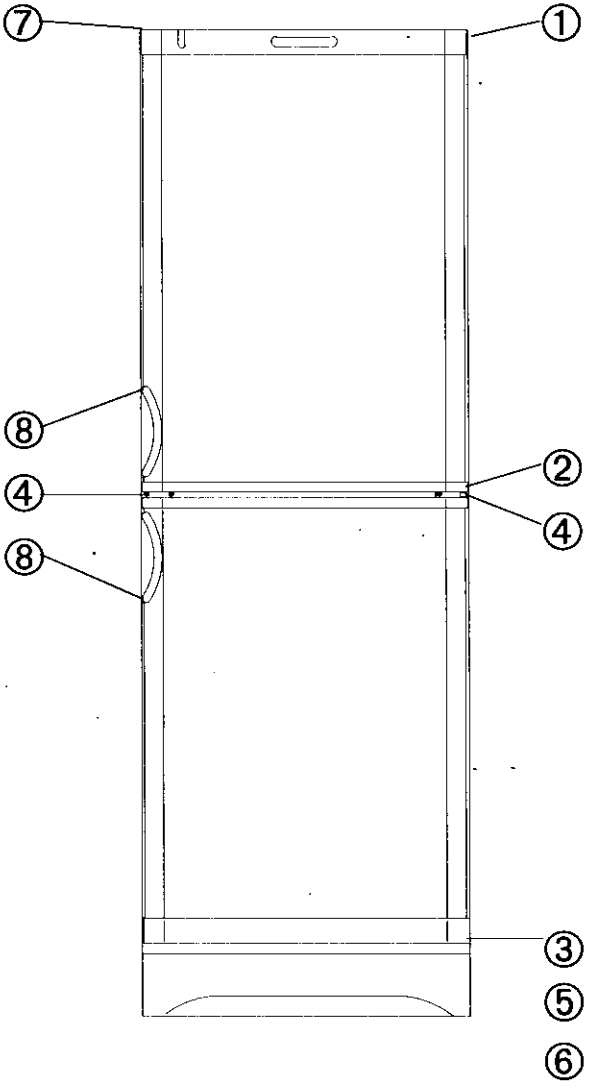
⑦
①
⑧
②
④
④
⑧
③
⑤
⑥

AEG

AUS
ERFAHRUNG
GUT

AEG Hausgeräte GmbH
Postfach 1036
D-90327 Nürnberg

© Copyright by AEG

407131213

95.63.545.09