PHIESTINA

INSTRUCTION MANUAL

Compressor Dual Zone Wine Refrigerator



33-Bottle

MODEL: PH-CWR100

Please read carefully and follow all safety rules and operating instructions.

- This appliance can’t be used by children or persons with reduced physical, sensory or mental capabilities or lack of experience.
- Children shall not play with the appliance. Cleaning and user maintenance shall not be made by children without supervision.
- If the supply cord is damaged, it must be replaced by the manufacturer, its service agent or similarly qualified persons in order to avoid a hazard.
- Keep ventilation openings, in the appliance enclosure or in the built-in structure, clear of obstruction.
- Do not use mechanical devices or other means to accelerate the defrosting process, other than those recommended by the manufacturer.
- Do not damage the refrigerant circuit.
- Do not use electrical appliances inside the wine storage compartments of the appliance, unless they are of the type recommended by the manufacturer.
- Do not store explosive substances such as aerosol cans with a flammable propellant in this appliance
- This appliance is intended to be used in household and similar applications such as kitchen areas in home, offices and other similar environments.

Content

1. Your Wine Refrigerator..... 4
2. Technical Data.....5
3. Safety Precautions.....6
4. Important Precautions.....6
5. Installation Instructions.....6
6. Operating Your Wine Refrigerator..... 7
7. Care and Maintenance.....6
8. Trouble Shootings.....8
9. Warranty.....9

Your Wine Refrigerator

PH-CWR100

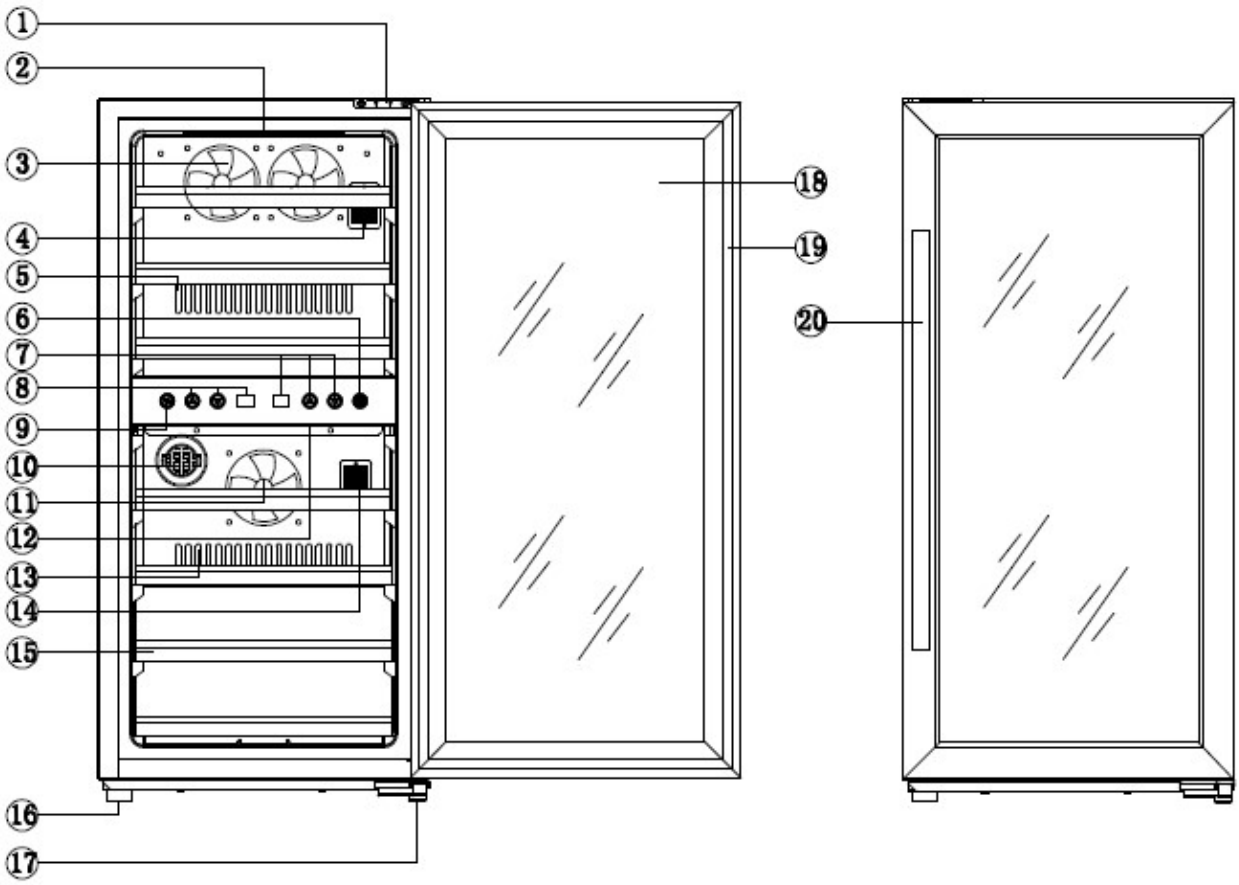

1. Upper Hinge
2. Upper Zone Light
3. Fan
4. Upper Zone NTC Point
5. Exhaust Window
6. Light Switch
7. Lower Zone Temperature Control and Display
8. Upper Zone Temperature Control and Display
9. Celsius/Fahrenheit Switch
10. Carbon Filter
11. Lower Zone Fan
12. Lower Zone Light
13. Exhaust Window
14. Lower Zone NTC Point
15. Shelf
16. Adjustable Legs
17. Lower Door Hinge
18. Door Glass
19. Door Seal
20. Door Handle

Technical Data

Model No.	PH-CWR100
Capacity	100L
Voltage	110V
Rated Current	1.2A
Frequency	60Hz
Protection Class	I
Climate Class	T/ST/N/SN
Input Power	90W
Power Consumption(KW.h/24h)	0.63 KW.h/24h
Temperature Control Range	Upper zone:40-50°F Lower zone: 50-66°F
Net Weight	78.2 lbs
Gross Weight	94 lbs
Product size(W×H×D)	15.5”(W) x 33.1”(H) x 22.8”(D)
Packing size(W×H×D)	18.7”(W) x 35.4”(H) x 26.0”(D)

Electrical Circuit Diagram

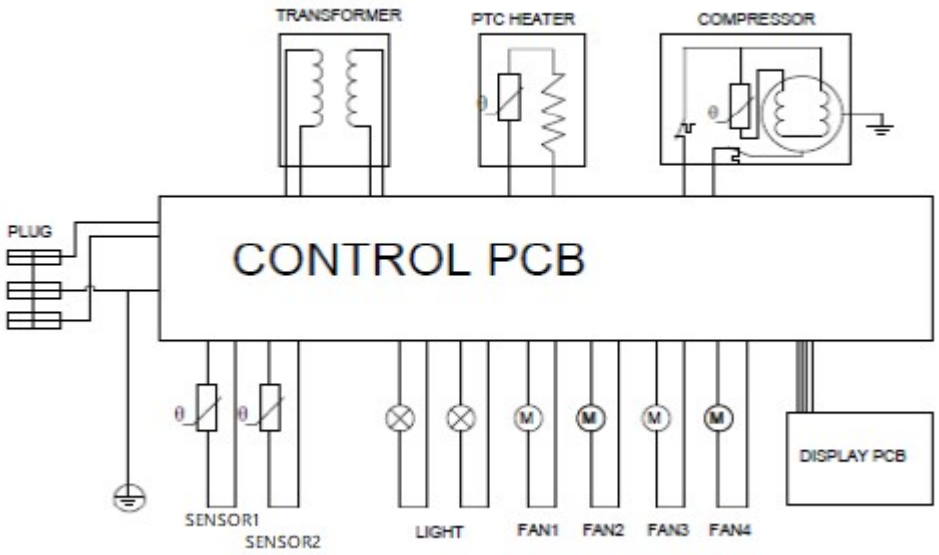

Safety Precautions

⚠ WARNING ⚠

To reduce the risk of fire, electrical shock, or injury when using your appliance, follows these basic precautions;

- **PLEASE READ** all instructions before installing, operating, or servicing the appliance.
- **Danger and Warning:** Failure to follow this safety statement will result in severe personal injury or death, property or equipment damage.
- **RISK OF CHILD ENTRAPMENT.** Before you throw away your old refrigerator or freezer, take off the doors and leave shelves in place so children may not easily climb inside.
- **RISK OF CHILD BE INJURED.** Never allow children to put their fingers through any exhaust window.
- ⚠**SHOCK HAZARD** - Electrical Grounding required.
- Never attempt to repair or perform maintenance on the unit until the electricity has been disconnected.
- Never remove the round grounding prong from the plug and never use a two-prong grounding adaptor.
- Altering, cutting of power cord, removal of power cord, removal of power plug, or direct wiring can cause serious injury, fire or loss of property and life, and will void the warranty.
- Never use an extension cord to connect power to the unit.
- Always keep the working area dry.

Important Precautions

- Do not lift unit by door handle.
- Do keep the door closed before installing into cabinet.
- Be sure the kick-plate on the front bottom is free from obstruction. Obstructing free airflow can cause the unit to malfunction and will void the warranty.
- Failure to clean the condenser every six months can cause the unit to malfunction.
- Allow unit temperature to stabilize for 24 hours before use.
- Do not block any internal fans.
- Use only genuine supplier's replacement parts. Imitation parts can damage the unit, affect its operation or performance and may void the warranty.

Installation Instructions

Before using your wine refrigerator:

- Remove the exterior and interior packing
- Before connecting the appliance to the power outlet, let it stand upright for approximately 2 hours. This will reduce the possibility of malfunction in the cooling system from handling during transportation.
- Clean the interior surface with lukewarm water using a soft cloth.
- Place your appliance on a floor that is strong enough to support the appliance when it is fully loaded.
- To level your appliance, adjust the front legs at the bottom of the appliance.
- **To install the door handle:**
  For shipment, the door handle has been stored inside of the unit binding to the wood shelves. To install the handle, the door gasket should be gently pulled back where it covers the screw holes for the handle, then the handle should be attached by screwing into place with the two screws which are packed in the box with this Instruction Manual and other spare parts.

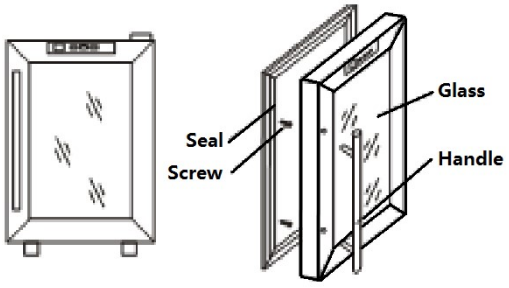

- **Spare parts details:**

Screw *2	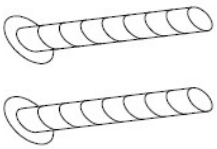	For the handle installation.
Gasket *2		For the handle installation.

Operating Your Wine refrigerator



- To control the upper zone temperature, press UP or DOWN button on the left side. Each press would adjust the temperature by 1°C between 5~10°C or 1°F between 40~50°F.
- To control the lower zone temperature, press UP or DOWN button on the right side. Each press would adjust the temperature by 1°C between 10~18°C or 1°F between 50~66°F.
- To turn on or off the internal LED lighting, press LIGHT button on the right side.
- To switch the temperature, display from Celsius Degree to be Fahrenheit Degree or vice versa, press C/F button.

Care & Maintenance

Cleaning your wine refrigerator

- Unplug the beverage refrigerator and remove the bottles.
- Wash the inside with warm water or baking soda solution. The solution should be about 2 tablespoons of baking soda to a quart of water.
- The outside of wine refrigerator should be cleaned with mild detergent or warm water.
- Draw out the water box at the bottom, and wash it.

Moving your wine refrigerator

- Remove all the bottles.
- Securely tape down all loose items inside your wine refrigerator.
- Turn the leveling legs up to the base to avoid damage.
- Tape the door.
- Be sure the wine refrigerator stays in the upright position during transportation.

Trouble Shootings

You can solve many common wine refrigerator problems easily, saving you the cost of a possible service call. Try the suggestion below to see if you can solve the problem before calling the service center.

PROBLEM	POSSIBLE CAUSE
Wine refrigerator do not operate.	Not plugged in using different voltage. The circuit breaker tripped or a blown fuse.
Wine refrigerator is not cold enough.	Check the temperature control setting. The door is open too often. The door is not closed completely. The door seal does not seal properly. The wine refrigerator does not have the correct clearance.
The light does not work.	Main control board does not work. PCB Problem. There is some problem with the plug.
Vibrations.	Check to assure that the wine refrigerator is leveled.
The wine refrigerator seems to make to much noise	The wine refrigerator is not leveled. Check the fan.
The door will not close properly.	The wine refrigerator is not leveled. The doors were reversed and not properly installed. The seal is weak. The shaves out of position.
LED could not display.	Main control board does not work. PCB Problem. There is some problem with the plug.
LED display error.	Weak quality of display. Temperature point is out off.
Buttons are not functional.	Temperature controller panel is damaged.

PHIESTINA LIMITED WARRANTY

Full One Year Warranty

Warranty Terms:

The manufacture warrants to the original purchaser of this product that the product will be free from manufacturing defects in workmanship and material for a period of 1 year from the date of original purchase when this major appliance is operated and maintained according to instructions attached to or furnished with the product.

The purchaser must contact the manufacture Customer Service Department and provide a description of the defective part, including digital pictures if requested, with buying channel, serial number, order ID and the original purchase documentation as validation of warranty coverage date.

Once confirmed that your appliance is eligible for the warranty service, Phiestina Customer Service Department will contact you by mail or phone about the maintenance solution. Replacement parts and/or units will be new, re-manufactured or refurbished and is subject to the manufacturer's discretion. Phiestina is not responsible for damage resulting from shipper mishandling or improper packing. Do not return a defective product to the place of purchase. Product received without a return authorization number will be refused.

After receiving the unit, please do not remove, altered original model/serial number, that will influence the after-sale service. Please carefully keep the user manual and warranty card for future reference.

If you need service, first see the "Troubleshooting" section of the User Manual. After checking, you may find additional help by mailing or calling us.
Write down the following information about your product to better help you obtain assistance or service if you ever need. You can find this information on the model and serial number located on the product.

Dealer name_____
Model number_____
Serial number_____
Order number_____
Purchase date_____

Warranty Exclusions:

The warranty will not apply if damage is caused by any of the following:

1. Damage to the product due to misuse, mishandling and abuse.
2. Product not assembled or installed according to manufacturer's instruction.
3. Repairs by unauthorized persons or service centers with unauthorized spare parts.
4. Failure to provide reasonable and necessary maintenance.
5. Improper power supply such as low voltage, defective household wiring or inadequate fuses.
6. Accident, alteration, misuse or abuse of the appliance such as using non-approved accessories, inadequate air circulation in the room or abnormal operating conditions, such as extreme temperatures.
7. Damage in transit or when moving the appliance.
8. Use of force or damage caused by external influences.
9. Store improper things.
10. Normal wear and tear.
11. Cosmetic damage, including scratches, dents, chips, or other damage to the finish of your product, unless such damage results from defects in materials or workmanship and is reported to us within 30 days from the date of purchase.
12. Fire, water damage, theft, war, riot, hostility or acts of God such as hurricanes, floods, etc. In addition consequential damage and incidental damages, such as damage to person or property are not coverable under this warranty.
13. Partially or completely dismantled appliances.

To obtain service or information, please call 866-675-2011 or send email to
service@phiestina.com
Product contents and specifications may change without notice.
Copyright © 2017 Phiestina Products