Haier

HRF241VW

REFRIGERATOR



USER'S INSTRUCTIONS

⚠ Safety information

In the interest of your safety and to ensure the correct use, before installing and first using the appliance, read this user manual carefully, including its hints and warnings. To avoid unnecessary mistakes and accidents, it is important to ensure that all people using the appliance are thoroughly familiar with its operation and safety features. Save these instructions and make sure that they remain with the appliance if it is moved or sold, so that everyone using it through its life will be properly informed on appliance use and safety.
For the safety of life and property keep the precautions of these user's instructions as the manufacturer is not responsible for damages caused by omission.

Children and vulnerable people safety

- This appliance can be used by children aged from 8 years and above and persons with reduced physical, sensory or mental capabilities or lack of experience and knowledge if they have been given super vision or instruction concerning use of the appliance in a safe way and understand the hazards involved.
- Children should be supervised to ensure that they do not play with the appliance.
- Cleaning and user maintenance shall not be made by children unless they are aged from 8 years and above and supervised.
- Keep all packaging well away from children. There is risk of suffocation.
- If you are discarding the appliance pull the plug out of the socket, cut the connection cable (as close to the appliance as you can) and remove the door to prevent playing children to suffer electric shock or to close themselves into it.
- If this appliance featuring magnetic door seals is to replace an older appliance having a spring lock (latch) on the door or lid, be sure to make that spring lack unusable before you discard the old appliance. This will prevent it from becoming a death trap for a child.

General safety

⚠**WARNING!** Keep ventilation openings, in the appliance enclosure or in the built-in structure, clear of obstruction.

⚠**WARNING!** Do not use mechanical devices or other means to accelerate the defrosting process, other than those recommended by the manufacturer.

⚠**WARNING!** Do not damage the refrigerant circuit.

⚠ Safety information

⚠**WARNING!** Do not use other electrical appliances (such as ice cream makers) inside of refrigerating appliances, unless they are approved for this purpose by the manufacture.

⚠**WARNING!** Do not touch the light bulb if it has been on for a long period of time because it could be very hot.[1)]

- Do not store explosive substances such as aerosol cans with a flammable propellant in this appliance.
- The refrigerant isobutane (R600a) is contained within the refrigerant circuit of the appliance, a natural gas with a high level of environmental compatibility, which is nevertheless flammable.
- During transportation and installation of the appliance, be certain that none of the components of the refrigerant circuit become damaged.
  - avoid open flames and sources of ignition
  - thoroughly ventilate the room in which the appliance is situated
- It is dangerous to alter the specifications or modify this product in any way. Any damage to the cord may cause a short circuit, fire and/or electric shock.
- This appliance is intended to be used in household and similar applications such as
  - staff kitchen areas in shops, offices and other working environments;
  - farm houses and by clients in hotels, motels and other residential type environments;
  - bed and breakfast type environments;
  - catering and similar non-retail applications.

⚠**WARNING!** Any electrical components(plug, power cord, compressor and etc.) must be replaced by a certified service agent or qualified service personnel.

⚠**WARNING!** The light bulb supplied with this appliance is a “special use lamp bulb” usable only with the appliance supplied. This “special use lamp” is not usable for domestic lighting.[1)]

1) If there is a light in the compartment.

⚠ Safety information

- Power cord must not be lengthened.
- Make sure that the power plug is not squashed or damaged by the back of the appliance. A squashed or damaged power plug may overheat and cause a fire.
- Make sure that you can come to the mains plug of the appliance.
- Do not pull the mains cable.
- If the power plug socket is loose, do not insert the power plug. There is a risk of electric shock or fire.
- You must not operate the appliance without the lamp.
- This appliance is heavy. Care should be taken when moving it.
- Do not remove nor touch items from the freezer compartment if you hands are damp/wet, as this could cause skin abrasions or frost/freezer burns.
- Avoid prolonged exposure of the appliance to direct sunlight.

Daily use

- Do not put hot on the plastic parts in the appliance.
- Do not place food products directly against the rear wall.
- Frozen food must not be re-frozen once it has been thawed out.[1)]
- Store pre-packed frozen food in accordance with the frozen food manufacture's instructions.[1)]
- Appliance's manufactures storage recommendations should be strictly adhered to. Refer to relevant instructions.
- Do not place carbonated of fizzy drinks in the freezer compartment as it creates pressure on the container, which may cause it to explode, resulting in damage to the appliance.[1)]
- Ice lollies can cause frost burns if consumed straight from the appliance.[1)]

Care and cleaning

- Before maintenance, switch off the appliance and disconnect the mains plug from the mains socket.
- Do not clean the appliance with metal objects.
- Do not use sharp objects to remove frost from the appliance. Use a plastic scraper.[1)]
- Regularly examine the drain in the refrigerator for defrosted water. If necessary, clean the drain. If the drain is blocked, water will collect in te bottom of the appliance.[2)]

1) If there is a freezer compartment.
2) If there is a fresh-food storage compartment.

⚠ Safety information

Installation

Important! For electrical connection carefully follow the instructions given in specific paragraphs.

- Unpack the appliance and check if there are damages on it. Do not connect the appliance if it is damaged. Report possible damages immediately to the place you bought it. In that case retain packing.
- It is advisable to wait at least four hours before connecting the appliance to allow the oil to flow back in the compressor.
- Adequate air circulation should be around the appliance, lacking this leads to overheating. To achieve sufficient ventilation follow the instructions relevant to installation.
- Wherever possible the spacers of the product should be against a wall to avoid touching or catching warm parts (compressor, condenser) to prevent possible burn.
- The appliance must not be located close to radiators or cookers.
- Make sure that the mains plug is accessible after the installation of the appliance.

Service

- Any electrical work required to do the servicing of the appliance should be carried out by a qualified electrician or competent person.
- This product must be serviced by an authorized Service Center, and only genuine spare parts must be used.

Energy saving

- Don’t put hot food in the appliance;
- Don’t pack food close together as this prevents air circulating;
- Make sure food don’t touch the back of the compartment(s);
- If electricity goes off, don’t open the door(s);
- Don’t open the door(s) frequently;
- Don’t keep the door(s) open for too long time;
- Don’t set the thermostat on exceeding cold temperatures;
- Some accessaries, such as drawers, can be removed to get larger storage volume and lower energy consumption.

⚠ Safety information

Environment Protection

This appliance does not contain gasses which could damage the ozone layer, in either its refrigerant circuit or insulation materials. The appliance shall not be discarded together with the urban refuse and rubbish. The insulation foam contains flammable gases: the appliance shall be disposed according to the appliance regulations to obtain from your local authorities. Avoid damaging the cooling unit, especially the heat exchanger. The materials used on this appliance marked by the symbol ♺ are recyclable.



The symbol on the product or on its packaging indicates that this product may not be treated as household waste. Instead it should be taken to the appropriate collection point for the recycling of electrical and electronic equipment. By ensuring this product is disposed of correctly, you will help prevent potential negative consequences for the environment and human health, which could otherwise be caused by inappropriate waste handling of this product. For more detailed information about recycling of this product, please contact your local council, your household waste disposal service or the shop where you purchased the product.

Packaging materials

The materials with the symbol are recyclable. Dispose the packaging in a suitable collection containers to recycle it.

Disposal of the appliance

1. Disconnect the mains plug from the mains socket.
2. Cut off the mains cable and discard it.

Overview

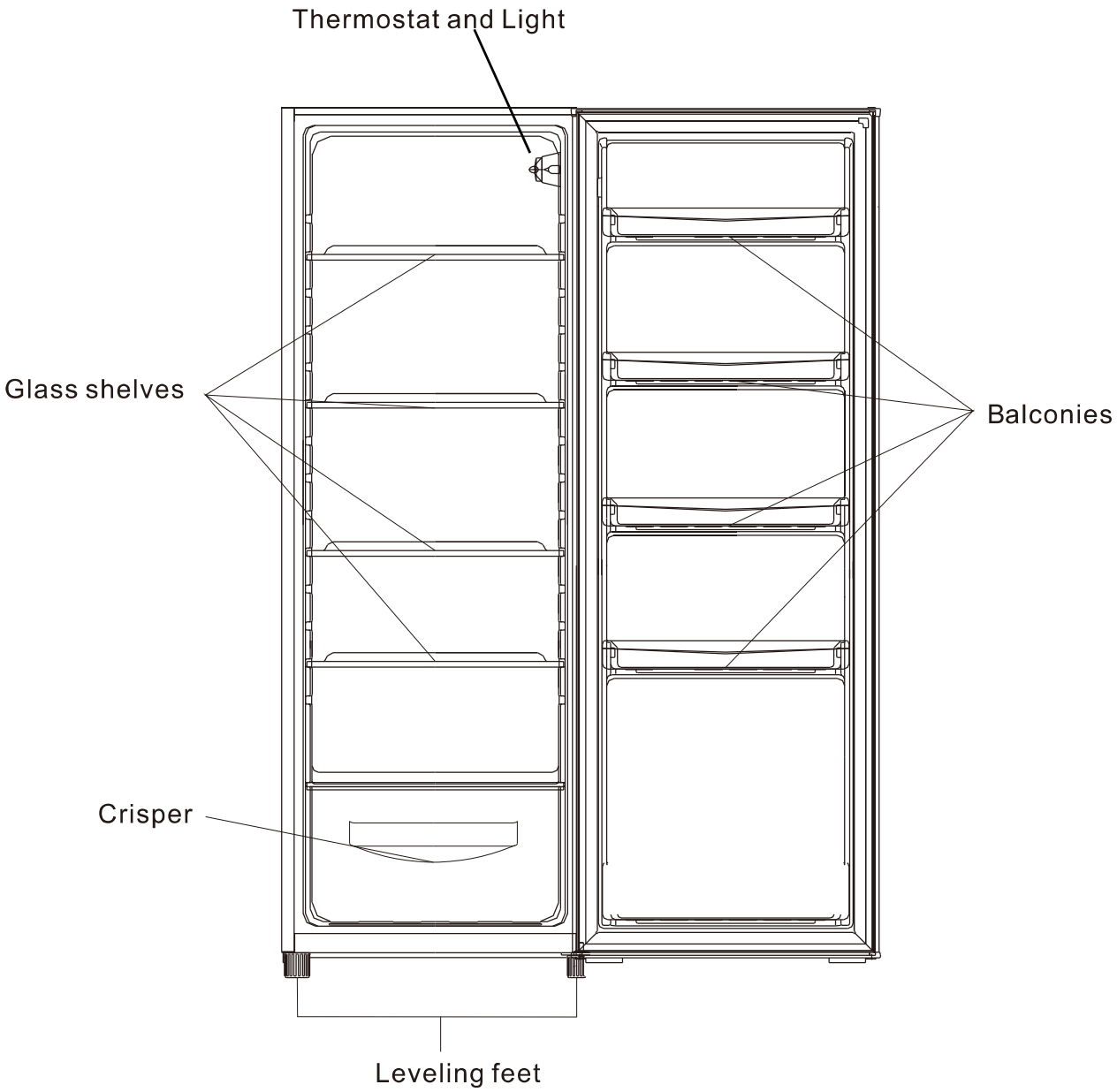

This illustration is only for hinting, the detailed appendix please contrast the material object.

Reverse Door

Tool required: Philips screwdriver, Flat bladed screwdriver, Hexagonal spanner.

- Ensure the unit is unplugged and empty.
- To take the door off, it is necessary to tilt the unit backwards. You should rest the unit on something solid so that it will not slip during the door reversing process.
- All parts removed must be saved to do the reinstallation of the door.
- Do not lay the unit flat as this may damage the coolant system.
- It' s better that 2 people handle the unit during assembly.

1. Remove the top right hinge cover.

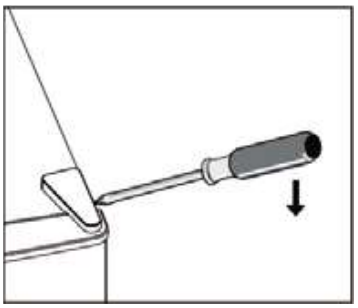

2. Undo the screws. Then remove the hinge bracket.

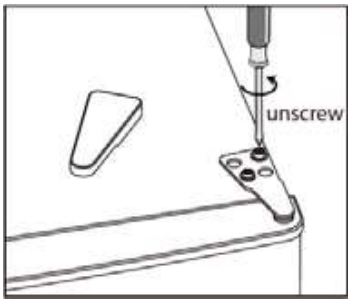

3. Remove the top left screw cover.

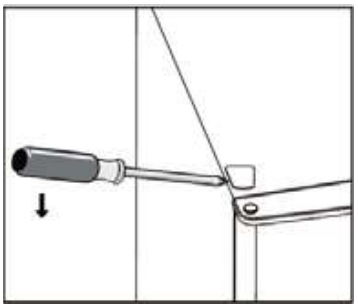

4. Move the core cover from left side to right side. And then lift the upper door and place it on a padded surface to prevent it from scratching.

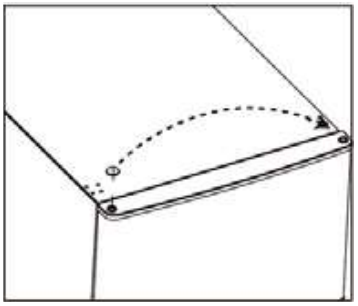

Reverse Door

5. Unscrew and remove the bottom hinge pin, turn the bracket over and replace it.

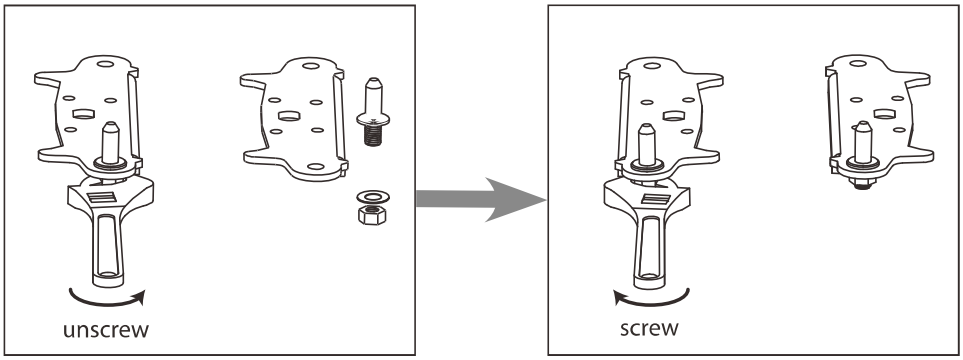

6. Refit the bracket fitting the bottom hinge pin. Replace both adjustable feet.

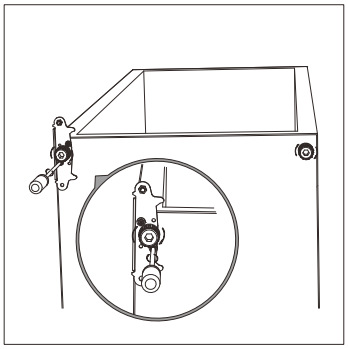

7. Place the door back on. Ensure the door is aligned horizontally and vertically so that the seals are closed on all sides before finally tightening the top hinge.
8. Insert the hinge bracket and screw it to the top of the unit.
9. Use a spanner to tighten it if necessary.

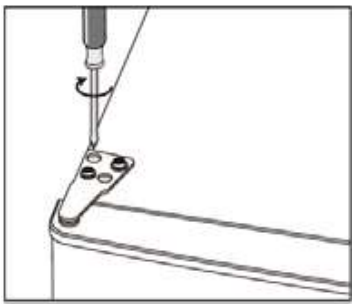

10. Put the hinge cover and the screw cover back.

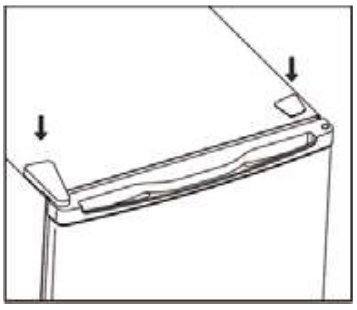

Installation

Space Requirement

- Keep enough space of door open.
- Keep at least 50mm gap at two sides.

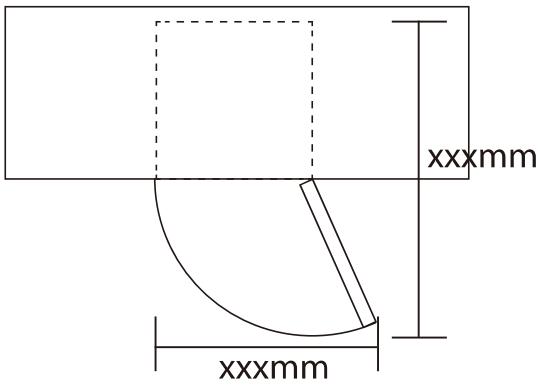

Levelling the unit

To do this adjust the two levelling feet at front of the unit.

If the unit is not level, the doors and magnetic seal alignments will not be covered properly.

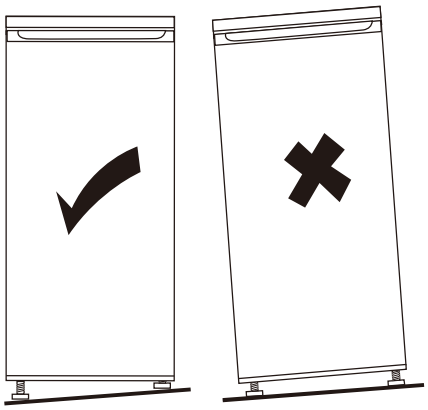

Installation

Positioning

Install this appliance at a location where the ambient temperature corresponds to the climate class indicated on the rating plate of the appliance:

Climate class	Ambient temperature
SN	+10°C to +32°C
N	+16°C to +32°C
ST	+16°C to +38°C
T	+16°C to +43°C

Location

The appliance should be installed well away from sources of heat such as radiators, boilers, direct sunlight etc. Ensure that air can circulate freely around the back of the cabinet. To ensure best performance, if the appliance is positioned below an overhanging wall unit, the minimum distance between the top of the cabinet and the wall unit must be at least 100 mm. Ideally, however, the appliance should not be positioned below overhanging wall units. Accurate leveling is ensured by one or more adjustable feet at the base of the cabinet.

⚠ **Warning!** It must be possible to disconnect the appliance from the mains power supply; the plug must therefore be easily accessible after installation.

Electrical connection

Before plugging in, ensure that the voltage and frequency shown on the rating plate correspond to your domestic power supply. The appliance must be earthed. The power supply cable plug is provided with a contact for this purpose. If the domestic power supply socket is not earthed, connect the appliance to a separate earth in compliance with current regulations, consulting a qualified electrician.
The manufacturer declines all responsibility if the above safety precautions are not observed.
This appliance complies with the E.E.C. Directives.

Daily Use

First use

Cleaning the interior

Before using the appliance for the first time, wash the interior and all internal accessories with lukewarm water and some neutral soap so as to remove the typical smell of a brand new product, then dry thoroughly.

Important! Do not use detergents or abrasive powders, as these will damage the finish.

Temperature Setting

- Plug on your appliance. The internal temperature is controlled by a thermostat. There are 8 settings . **1** is warmest setting and 7is coldest setting and 0 is to turn off the appliance.
- The appliance may not operate at the correct temperature if it is in a particularly hot or if you open the door often.

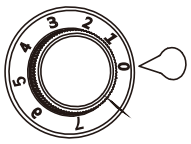

Accessories

Movable shelves

The walls of the refrigerator are equipped with a series of runners so that the shelves can be positioned as desired.

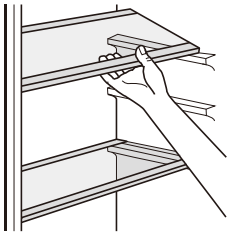

Positioning the door balconies

To permit storage of food packages of various sizes, the door balconies can be placed at different heights. To make these adjustments proceed as follows: gradually pull the balcony in the direction of the arrows until it comes free, then reposition as required.

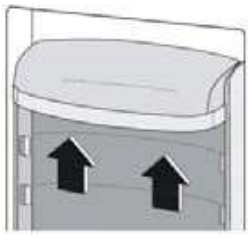

Helpful hints and tips

Hints for fresh food refrigeration

To obtain the best performance:

- Do not store warm food or evaporating liquids in the refrigerator
- Do cover or wrap the food, particularly if it has a strong flavour

Hints for refrigeration

Useful hints:

- Make (all types): wrap in polythene bags and place on the glass shelves above the vegetable drawer.
- For safety, store in this way only one or two days at the most.
- Cooked foods, cold dishes, etc...: these should be covered and may be placed on any shelf.
- Fruit and vegetables: these should be thoroughly cleaned and placed in the special drawer(s) provided.
- butter and cheese: these should be placed in special airtight containers or wrapped in aluminum foil or polythene bags to exclude as much air as possible.
- Milk bottle: these should have a cap and should be stored in the balconies on the door.
- Bananas, potatoes, onions and garlic, if not packed, must not be kept in the fridge.

Daily Use

Cleaning

For hygienic reasons the appliance interior, including interior accessories, should be cleaned regularly.

Caution! The appliance may not be connected to the mains during cleaning. Danger of electrical shock! Before cleaning switch the appliance off and remove the plug from the mains, or switch off or turn out the circuit breaker or fuse. Never clean the appliance with a steam cleaner. Moisture could accumulate in electrical components, danger of electrical shock! Hot vapors can lead to the damage of plastic parts. The appliance must be dry before it is placed back into service.

Important! Ethereal oils and organic solvents can attack plastic parts, e.g. lemon juice or the juice form orange peel, butyric acid, cleanser that contain acetic acid.

- Do not allow such substances to come into contact the appliance parts.
- Do not use any abrasive cleaners
- Remove the food from the freezer. Store them in a cool place, well covered.
- Switch the appliance off and remove the plug from the mains, or switch off or turn out the circuit breaker of fuse.
- Clean the appliance and the interior accessories with a cloth and lukewarm water. After cleaning wipe with fresh water and rub dry.
- After everything is dry place appliance back into service.

Replace the lamp

Caution! Before replacing the lamp, shall disconnect the appliance from mains power supply.

Lamp specification is listed in rating label.
Follow below process to replace the lamp:

1. Set the temperature regulation knob at number “0” to switch off the appliance.
2. Unplug the appliance to make sure the appliance is disconnected from main power supply.
3. Remove the screw of the lamp cover.
4. Pull the lamp cover out.
5. Unscrew the lamp.
6. Fit new lamp according to the opposite direction, then replace the lamp cover and screw.
7. Plug in the appliance and regulate the knob to right position.

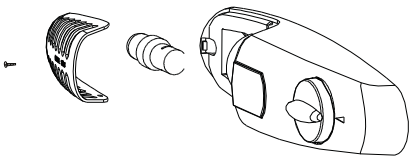

Daily Use

Troubleshooting

Caution! Before troubleshooting, disconnect the power supply. Only a qualified electrician of competent person must do the troubleshooting that is not in this manual.

Important! There are some sounds during normal use (compressor, refrigerant circulation).

Problem	Possible cause	Solution
Appliance does not work	Temperature regulation knob is set at number “0”.	Set the knob at other number to switch on the appliance.
	Mains plug is not plugged in or is loose	Insert mains plug.
	Fuse has blown or is defective	Check fuse, replace if necessary.
	Socket is defective	Mains malfunctions are to be corrected by an electrician.
The food is too warm.	Temperature is not properly adjusted.	Please look in the initial Temperature Setting section.
	Door was open for an extended period.	Open the door only as long as necessary.
	A large quantity of warm food was placed in the appliance within the last 24 hours.	Turn the temperature regulation to a colder setting temporarily.
	The appliance is near a heat source.	Please look in the installation location section.
Appliance cools too much	Temperature is set too cold.	Turn the temperature regulation knob to a warmer setting temporarily.
Unusual noises	Appliance is not level.	Re-adjust the feet.
	The appliance is touching the wall or other objects.	Move the appliance slightly.
	A component, e.g. a pipe, on the rear of the appliance is touching another part of the appliance or the wall.	If necessary, carefully bend the component out of the way.
Water on the floor	Water drain hole is blocked.	See the Cleaning and Care section.
Side panels are hot.	It’s normal. Heat exchange parts are in the sides.	Take gloves to touch sides.

If the malfunction shows again, contact the Service Center.

R600a Refrigerant Warning

- This appliance contains a small quantity of R600a refrigerant which is environmentally friendly, but flammable. It does not damage the ozone layer, nor does it increase the greenhouse effect.
- During transportation and installation, ensure that the tubing of the refrigerant circuit is not damaged.
- Leaking refrigerant can ignite and may damage the eyes.
- In the event any damage does occur, avoid exposure to open fires and any device which creates a spark. Disconnect the appliance from the mains power.
- Thoroughly ventilate the room in which the appliance is located for several minutes.
- The room for installing the appliance must be a least 1 cubic metre over 8 grams of refrigerant. The refrigerant quantity contained in this appliance is noted on the Rating Plate of the appliance.
- It Is hazardous for anyone other than an Authorised Service Person to service this appliance. In Queensland – the authorised Service Person MUST hold a Gas Work Authorisation for hydrocarbon refrigerants, to carry out Servicing or repairs which involve the removal of covers.