STATIC COMBI 252-266-278

Reversing the door

Hold the top hinge cover and remove it toward that direction.

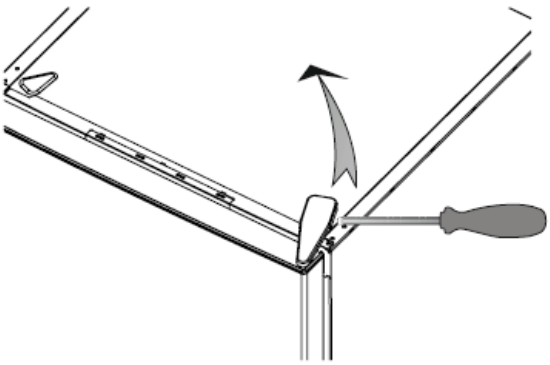

Unscrew the screws fixing the top hinge and remove it.

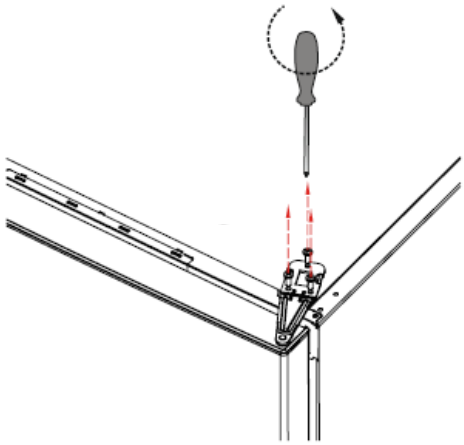

Displace the top door.

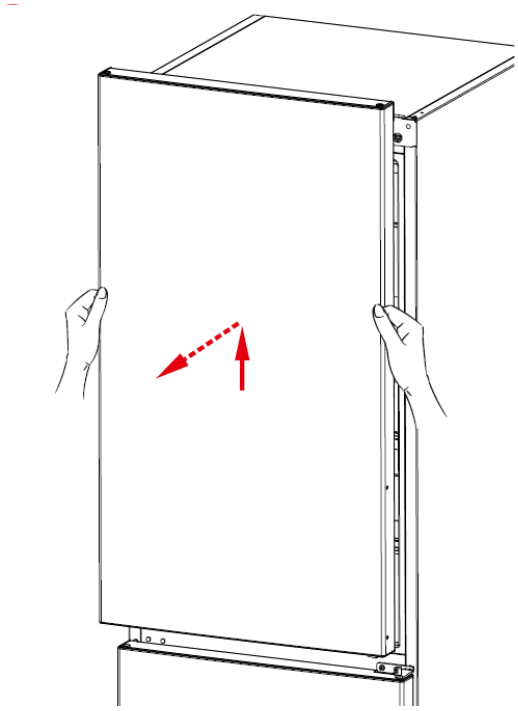

Remove the hince cover cap and assembly right side.

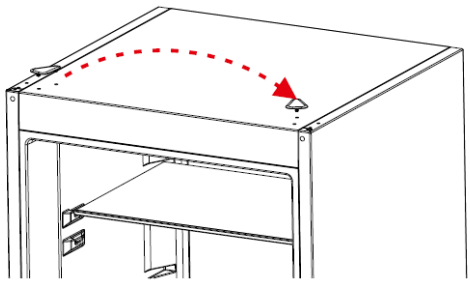

Unscrew the two screws fixing the middle hinge and remove it.

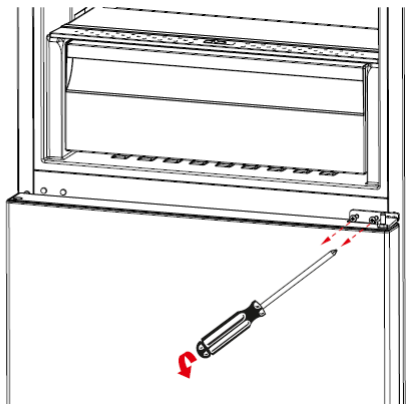

Displace the bottom door.

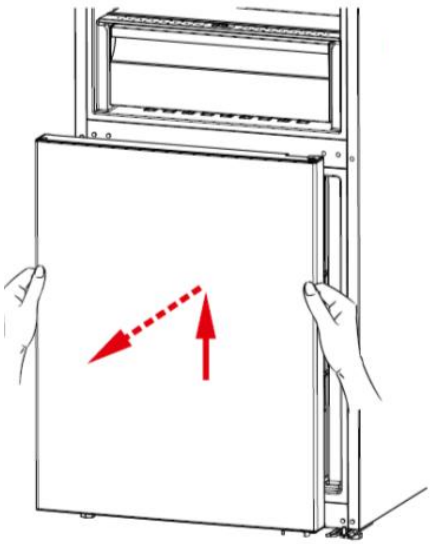

Unscrew the bottom hinge screws.
Unscrew the adjustable foot.

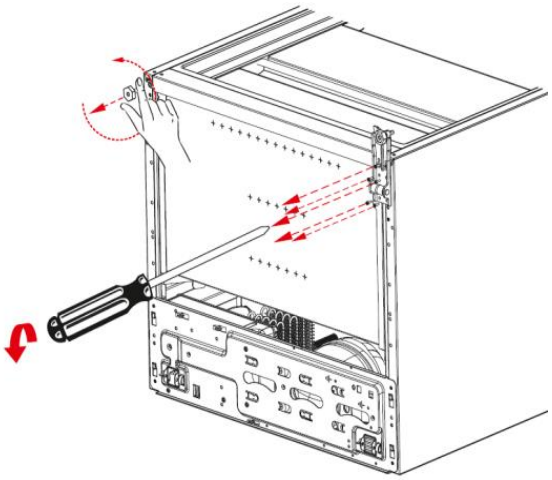

Unscrew the bottom hinge pin and screw it to other hole.

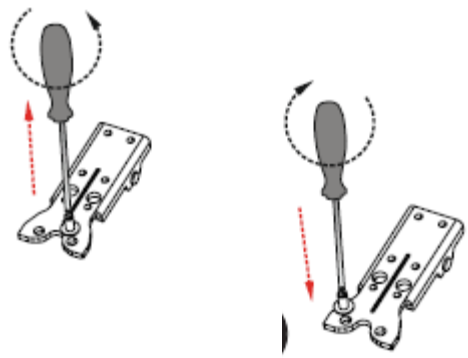

Screw the bottom hinge to the left bottom side of refrigerator. Screw the adjustable foot there.

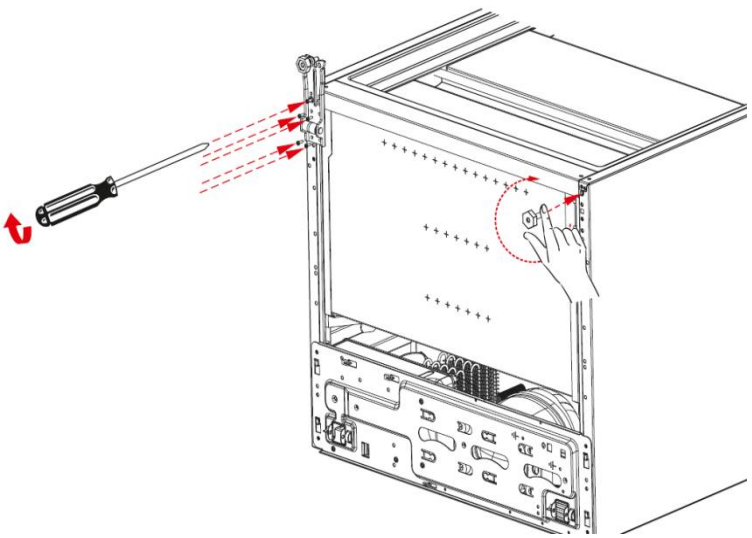

Replace the top bushing and the top bushing cap at the bottom door.

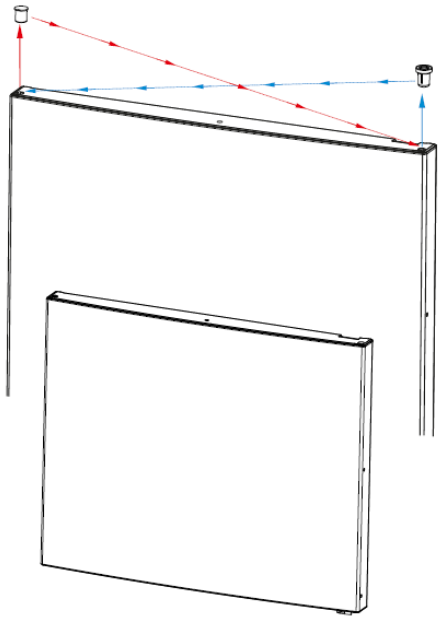

Unscrew the two screws fixing stopper and stopper support plate under the bottom door. After that screw the other side.

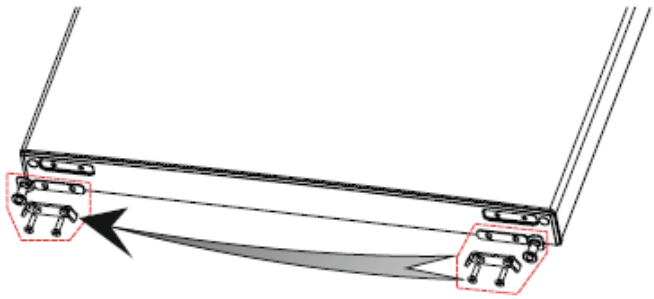

Remove the support plastic and then metal stopper placed under the upper door. Then re screw these parts to the other side symmetrically.
(remember the screw for the metal part must be screwed to the hole which is closer to the bushing). Do not use cordless screwdriver for these screws.

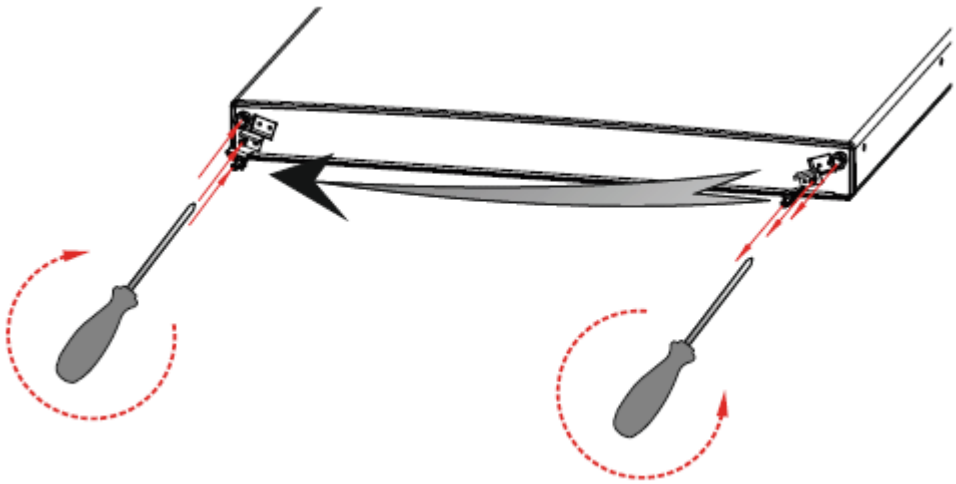

Remove the middle hinge cover and then screw the screw on the side panel and assemble to the right side panel

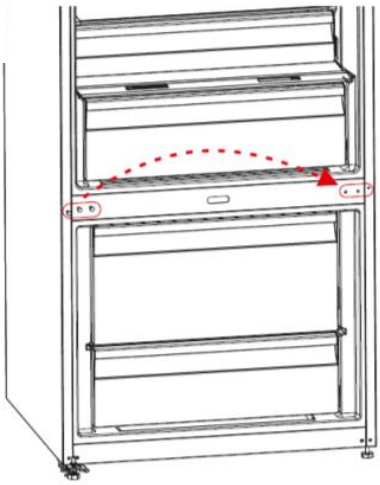

Place the bottom door and rotate the middle hinge by 180º. After that, Screw to the right side on the middle sheet.

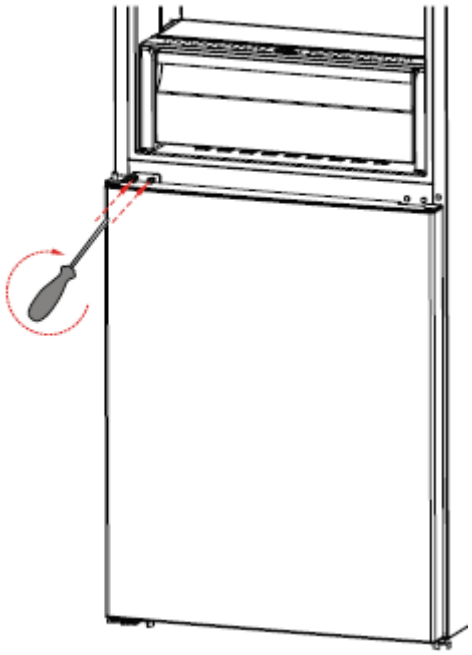

Place the top door to the middle hinge and then connect the display connector and screw the top hinge to the top panel. Place the top hinge cover.

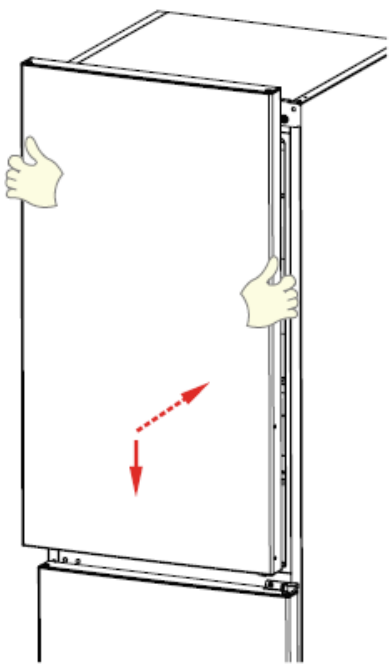

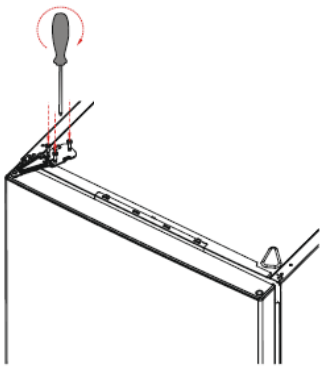

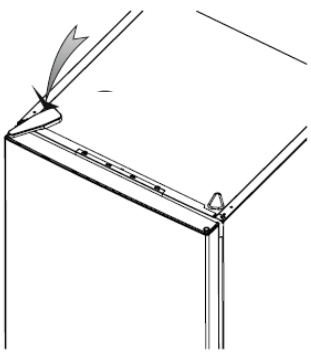

Thermostat Setting

The thermostat automatically regulates the temperature inside the cooler and freezer compartments.
Refrigerator temperatures can be obtained by rotating the knob to higher numbers; 1 to 3, 1 to 5

Thermostat settings:
1 – 2 : For short-term storage of food
3 – 4 : For long-term storage of food
5 : Maximum cooling position. The appliance will work longer. If required, change the temperature setting.



Replacement of LED

Screwdriver into the gap and remove the led cover.

Remove screw led

Disconnect the connector and change the led.





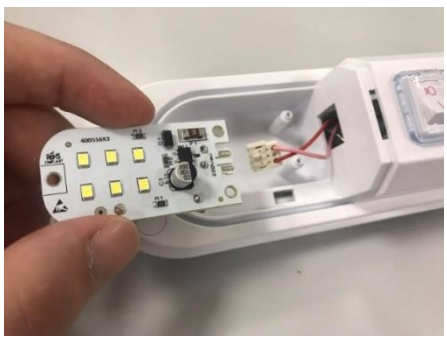

Replacement of Thermostat

CAUTION: The plug must be pulled out before the mainboard group is removed.

Remove screw which is attached one side of the termostat





Firstly take off the button and screw and then take off all cable connection and pull thermostat bulb out





Take off the lamp cover, cable connection and screw at below picture





Firstly cut off the black band and change the thermostat





Place the thermostat, screws is tightened, insert the button
Connect cables as shown below

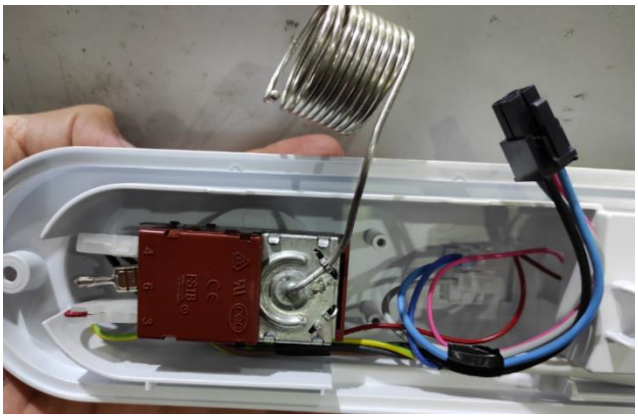

Send the thermostat bulb pipe throughout the hole until it end
Plug the black socket to the frige
Close the lamp cover ve screw is tightened which are attached one side of the termostat.

VESTEL WHITE GOODS	STATIC COMBI 252-266-278	CUSTOMER SUPPORT
	INSTRUCTIONS	

Door Gasket Change

Pull the gasket towards starting from top right corner
Slowly pull the rest of the gasket.
Completely remove the gasket from door.

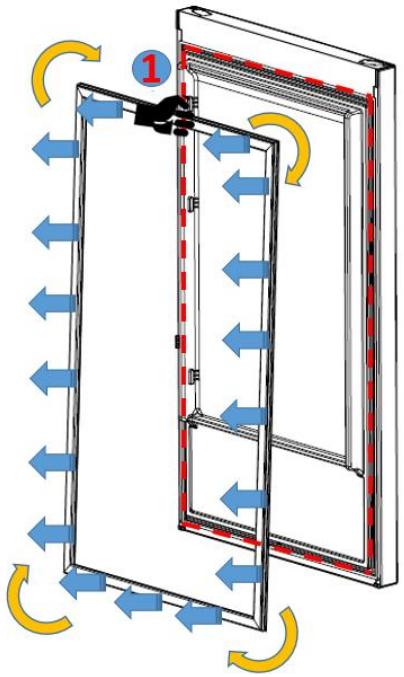

Check the replacement gasket form
Starting with upper right corner, press on the gasket until it fits to its place..
Place the other sides of the gasket with the help of your thumb

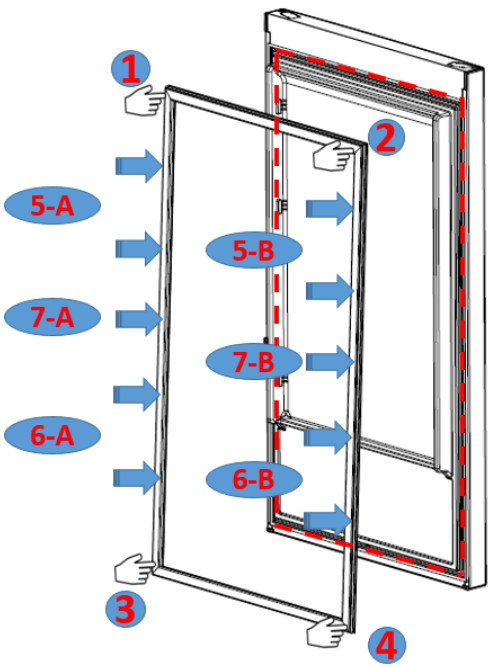

After the replacement check if there any non-fitting point on the gasket. Also check if there any opening at the gasket while the door is closed. If so that might cause condensation/icing or insufficient cooling/freezing. To prevent this soften the form of the gasket with the help of a hair dryer or hot water and make sure that all points are closing perfectly.

Removing/Assembling The Door Switch

1. Stick a tape to protect the body plastic. Flex it with the help of a tool like a slotted screwdriver.



2. Also flex the top-side of the switch and then displace by pulling.



3. Put the switch connector cable in the housing. First place the top-side of the switch and then push the bottom side.





4. After the switch is placed, complete the assembly by pushing.





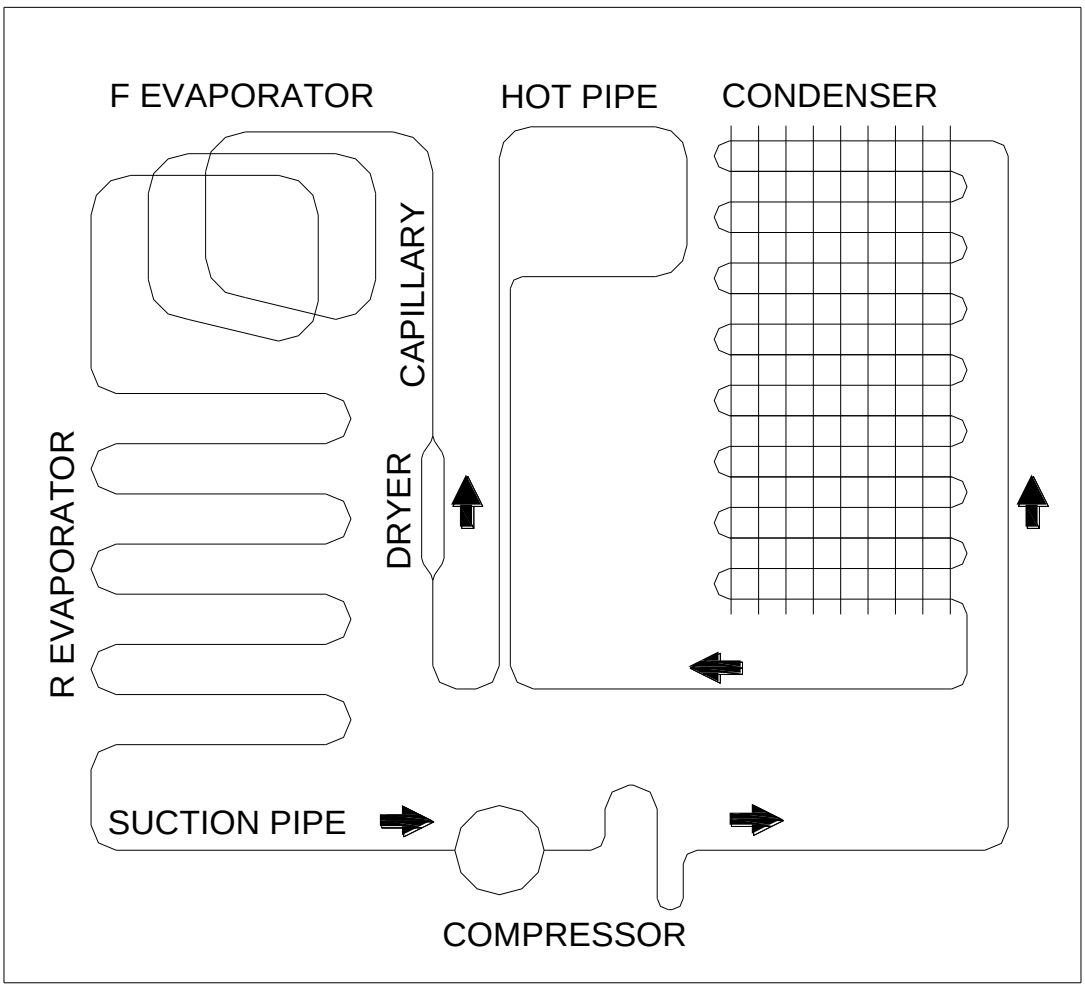
F EVAPORATOR
HOT PIPE
CONDENSER
CAPILLARY
DRYER
R EVAPORATOR
SUCTION PIPE
COMPRESSOR

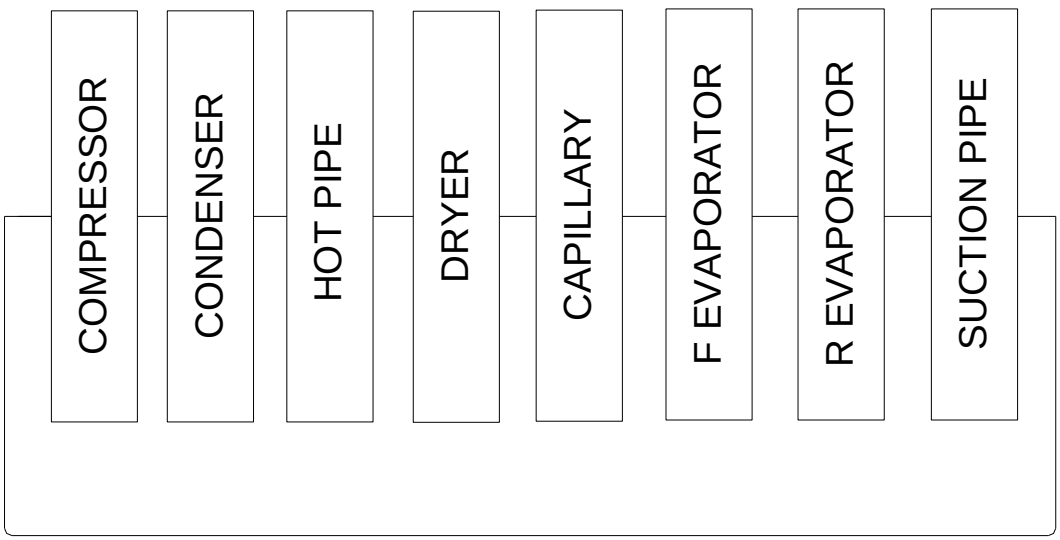
COMPRESSOR
CONDENSER
HOT PIPE
DRYER
CAPILLARY
F EVAPORATOR
R EVAPORATOR
SUCTION PIPE

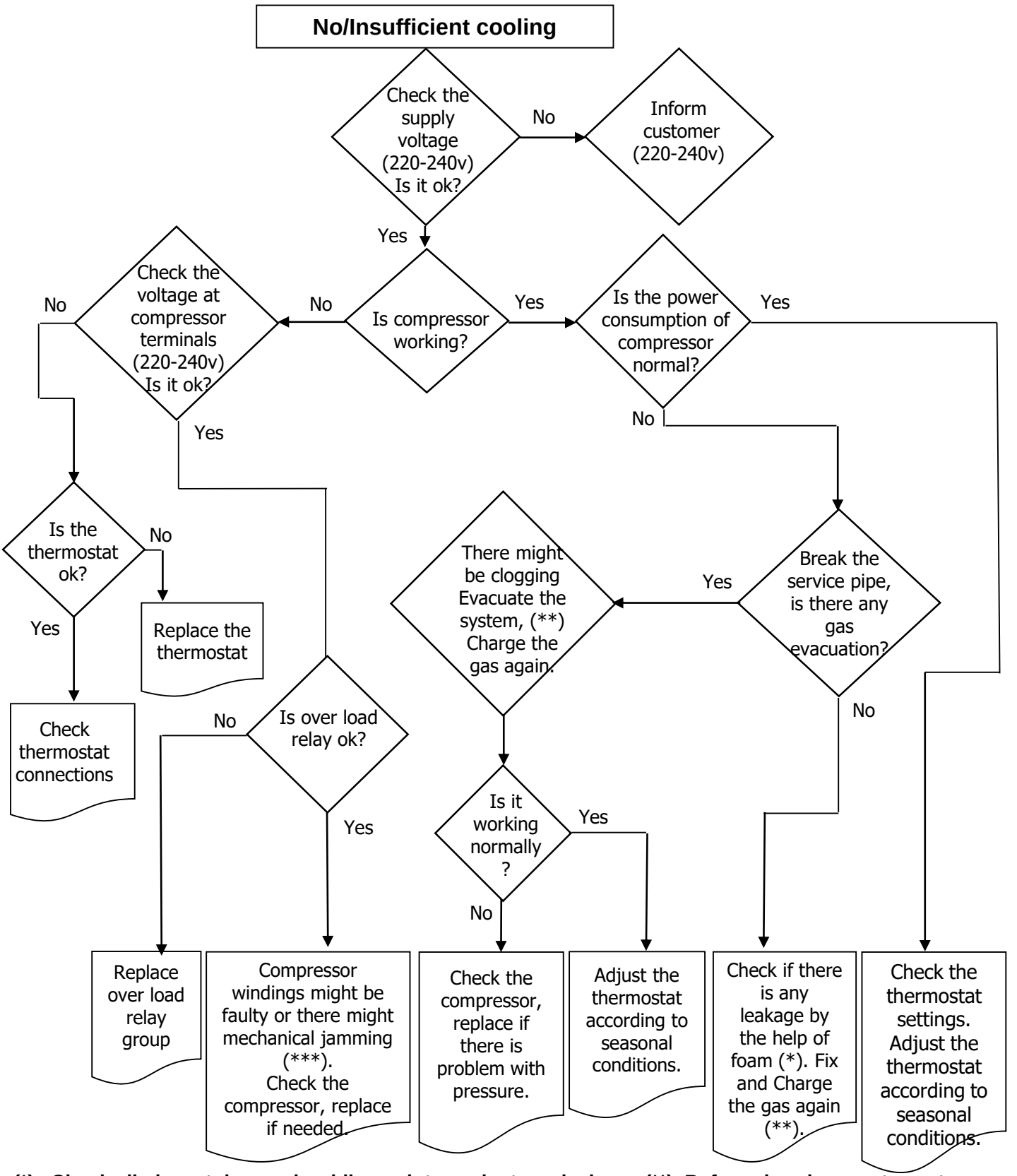

(*) Check all pipes, tubes and welding points against gas leakage. (**) Before charging gas to system, change dryer and vacuum at least 30 minutes, then charge the system with amount written on label (***) Compressor primary winding should be around 10 Ω and secondary around 15 Ω (at 25^{0}C ambiance temp.)

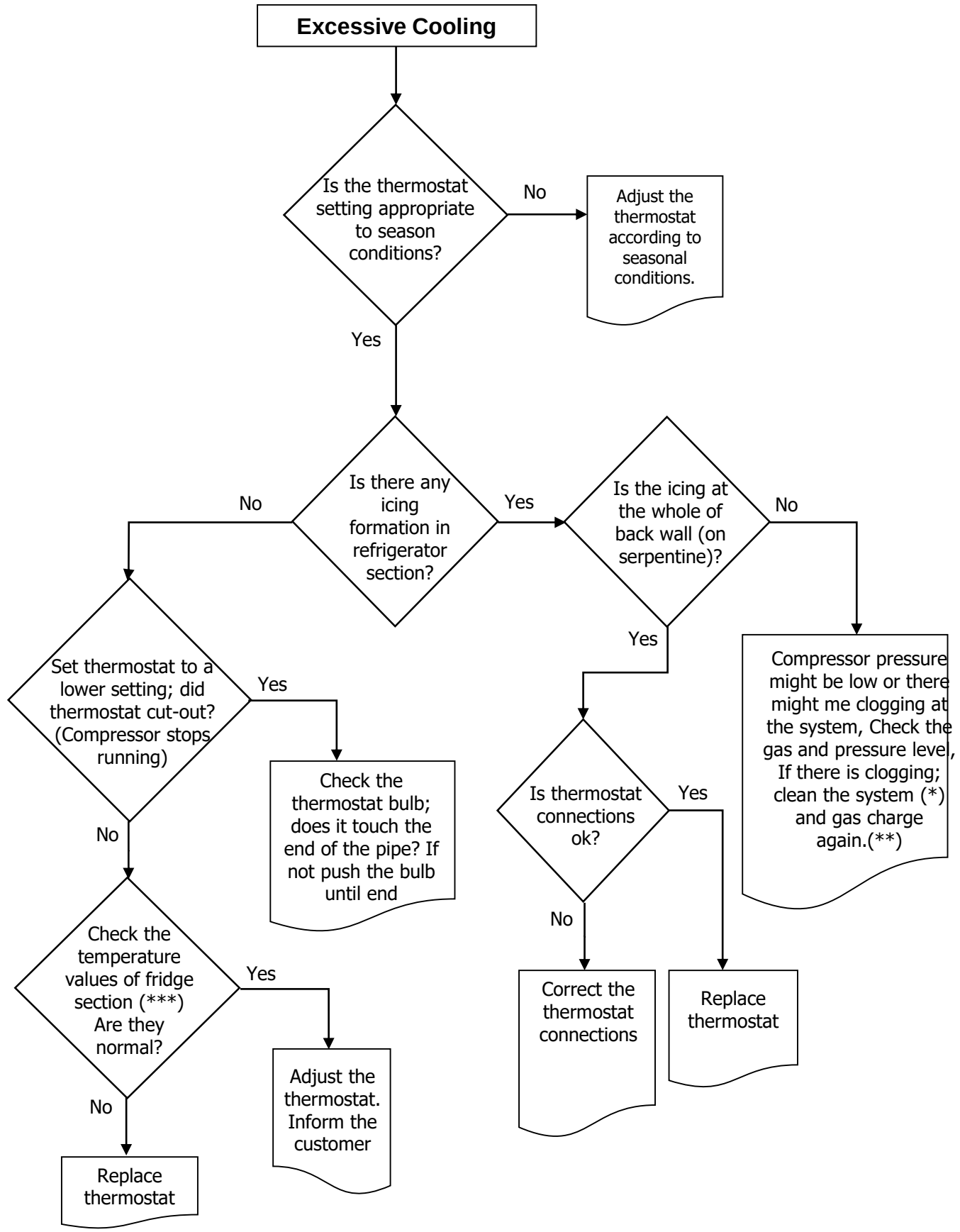
Excessive Cooling
Is the thermostat setting appropriate to season conditions?
No
Adjust the thermostat according to seasonal conditions.
Yes
Is there any icing formation in refrigerator section?
No
Yes
Is the icing at the whole of back wall (on serpentine)?
No
Compressor pressure might be low or there might me clogging at the system, Check the gas and pressure level, If there is clogging; clean the system (*) and gas charge again.(**)
Yes
Set thermostat to a lower setting; did thermostat cut-out? (Compressor stops running)
Yes
Check the thermostat bulb; does it touch the end of the pipe? If not push the bulb until end
No
Check the temperature values of fridge section (***) Are they normal?
Yes
Adjust the thermostat. Inform the customer
No
Replace thermostat
Is thermostat connections ok?
Yes
Replace thermostat
No
Correct the thermostat connections

Door/Gasket Adjustment

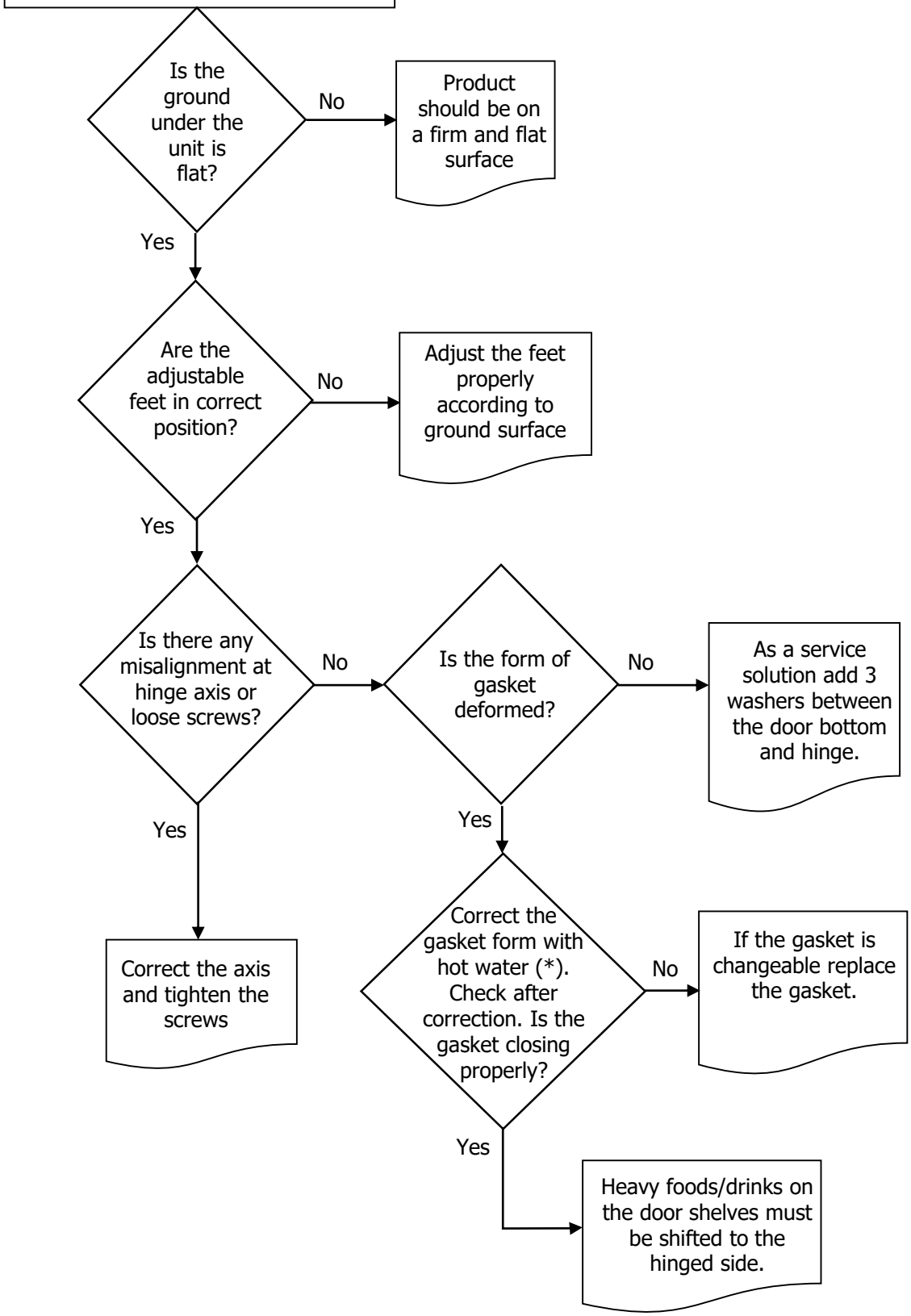

(*) Correct the gasket form by the help of hot water and hair dryer.

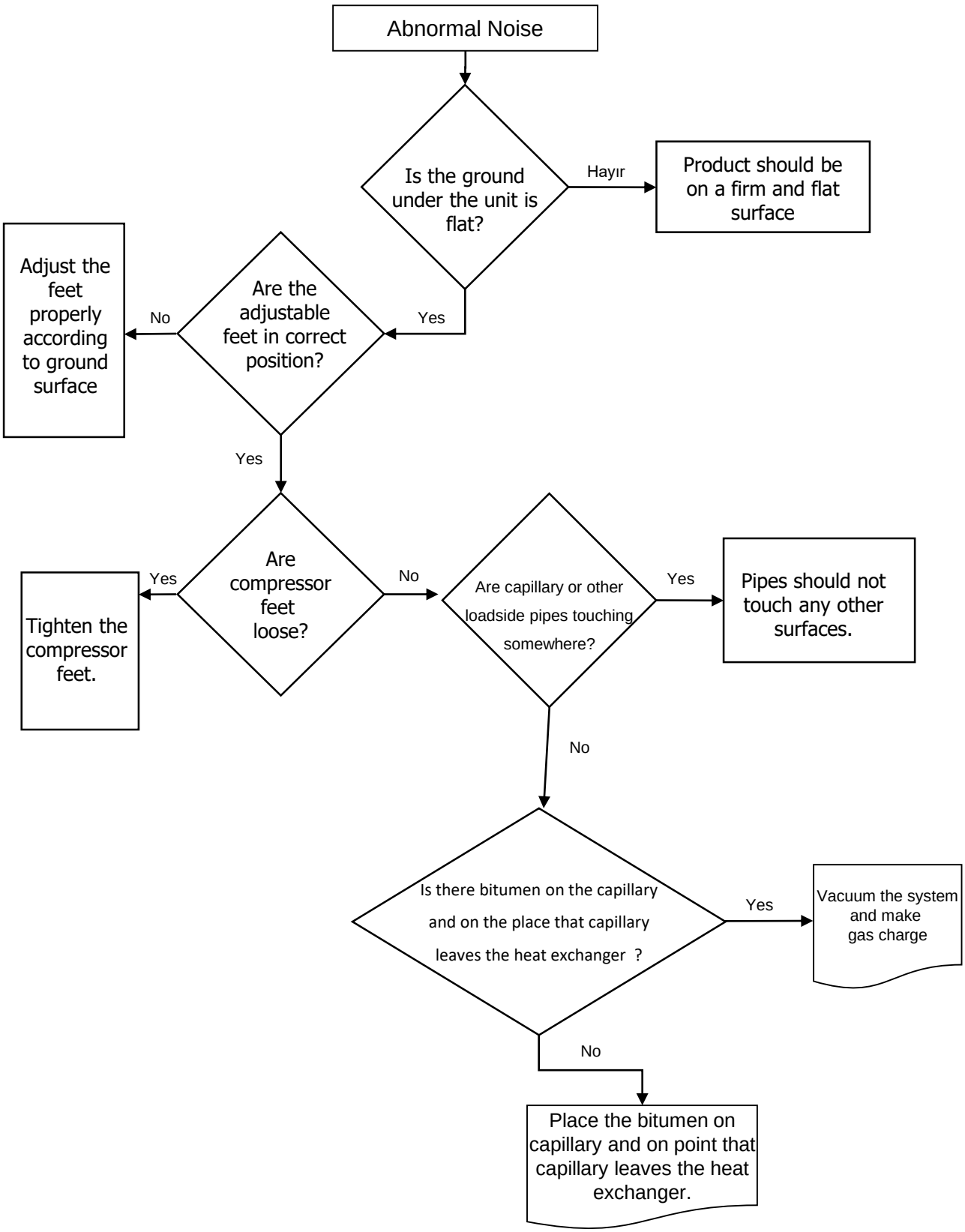
Abnormal Noise
Is the ground under the unit is flat?
Hayır
Product should be on a firm and flat surface
Yes
Are the adjustable feet in correct position?
No
Adjust the feet properly according to ground surface
Yes
Are compressor feet loose?
Yes
Tighten the compressor feet.
No
Are capillary or other loadside pipes touching somewhere?
Yes
Pipes should not touch any other surfaces.
No
Is there bitumen on the capillary and on the place that capillary leaves the heat exchanger ?
Yes
Vacuum the system and make gas charge
No
Place the bitumen on capillary and on point that capillary leaves the heat exchanger.

Vestel refrigerator serial numbers are consist of 22 digits.

