Life Style innovator

SAMSUNG Top-Mounted-Freezer Refrigerator

3050 TMF-PJT
TRAINING MANUAL

Basic Model : RT38(RT42) / RT35(RT39) / RT32(RT36) / RT29(RT33) / RT25(RT28) / RT22(RT26)

Model Code : RT38(RT42)FA* / RT35(RT39)FA* / RT32(RT36)FA* / RT29(RT33)FA* / RT25(RT28)FA* / RT22(RT26)FA* (Basic)
RT35(RT39)FB* / RT32(RT36)FB*, JC* / RT29(RT33)FB*, JC* (Dispenser)
RT38(RT42)FD* / RT35(RT39)FD* / RT32(RT36)FD* (Display)
RT38(RT42)FE*, JH* / RT35(RT39)FE*, JH* (Display+Dispenser)
RT38(RT42)FF* (Display+Dispenser+Stand Table)
RT38(RT42)FG* / RT35(RT39)FG* / RT32(RT36)FG* / RT29(RT33) FG* / RT25(RT28)FG* / RT22(RT26)FG* (Stand Table)
RT35(RT39)FJ* (Display+Stand Table)



RT**FF RT**FE RT**JH | RT**FD RT**FJ | RT**FB RT**JC | RT**FA RT**FG

Daniel Enciso16008594중남미총괄|SVC OUTSOURCED10521038249 20150910221211

345801441941140

CARACTERISTICAS

Model			RT38(RT42)			RT35(RT39)		RT32(RT36)	
Type			TMF 2 Door						
Temperature control			Electronic						
Option			Chilled & Movable Box	Dispenser	Auto Ice Maker	Chilled & Movable Box	Dispenser	Chilled & Movable Box	Chilled & Dispenser
Net Capacity (ℓ)	Total		385	380	372	363	359	322	320
	Freezer		87	87	79	87	87	72	72
	Refrigerator		298	293	293	276	272	250	248
Dimension (W X D X H)	Net		675 X 668 X 1785			675 X 668 X 1715		600 X 672 X 1715	
	Package	Recess	716 X 702 X 1850			716 X 702 X 1780		641 X 709 X 1780	
		Bar	716 X 749 X 1850			716 X 749 X 1780		641 X 756 X 1780	
Foam insulation	Cabinet		CYCLO-PENTANE			CYCLO-PENTANE		CYCLO-PENTANE	
	Door		CYCLO-PENTANE			CYCLO-PENTANE		CYCLO-PENTANE	
Liner	Cabinet		ABS			ABS		ABS, HIPS(SIEL-C)	
	Door		ABS			ABS		ABS, HIPS(SIEL-C)	
Net weight (kg)			66.5			59.5		57.7	

Daniel Enciso16008594중남미총괄|SVC OUTSOURCED10521038249 20150910221211
345801441941140

CARACTERISTICAS

Model			RT29 (RT33)		RT25 (RT28)	RT22 (RT26)
Type			TMF 2 Door			
Temperature control			Electronic			
Option			Chilled & Movable Box	Chilled & Dispenser	Chilled	Chilled
Net Capacity (ℓ)	Total		302	299	255	234
	Freezer		72	72	53	53
	Refrigerator		230	227	202	181
Dimension (W X D X H)	Net		600 X 672 X 1635		555 X 637 X 1635	555 X 637 X 1545
	Package	Recess	641 X 709 X 1698		582 X 663 X 1698	582 X 663 X 1610
		Bar	641 X 756 X 1698		582 X 710 X 1698	582 X 710 X 1610
Foam insulation	Cabinet		CYCLO-PENTANE		CYCLO-PENTANE	CYCLO-PENTANE
	Door		CYCLO-PENTANE		CYCLO-PENTANE	CYCLO-PENTANE
Liner	Cabinet		ABS, HIPS(SIEL-C)		ABS, HIPS(SIEL-C)	ABS, HIPS(SIEL-C)
	Door		ABS, HIPS(SIEL-C)		ABS, HIPS(SIEL-C)	ABS, HIPS(SIEL-C)
Net weight (kg)			53.7		50.7	48.3

Daniel Enciso16008594중남미총괄|SVC OUTSOURCED10521038249 20150910221211
345801441941140

CARACTERISTICAS

Model		RT38(RT42)F***A** RT38(RT42)F***D**	RT38(RT42)F***C**	RT35(RT39)F***A** RT35(RT39)F***D**	RT35(RT39)F***C**	RT32(RT36)F***A** RT32(RT36)F***D**	RT32(RT36)F***C**
Type		TMF 2 Door					
Rated Input		110~127V/60Hz 220~240V/50~60Hz	110~127V/60Hz 220~240V/50~60Hz	110~127V/60Hz 220~240V/50~60Hz	110~127V/60Hz 220~240V/50~60Hz	110~127V/60Hz 220~240V/50~60Hz	110~127V/60Hz 220~240V/50~60Hz
Compressor	Model	MSV488AL1R	MSV488AL1P	MSV488AL1R	MSV488AL1P	MSV488AL1R	MSV488AL1P
	Type	BLDC (INVERTER)	BLDC (INVERTER)	BLDC (INVERTER)	BLDC (INVERTER)	BLDC (INVERTER)	BLDC (INVERTER)
	Refrigerant	R-600a, 57g	R-600a, 65g	R-600a, 57g	R-600a, 65g	R-600a, 53g	R-600a, 65g
	Oil Charge	200cc	200cc	200cc	200cc	200cc	200cc
Evaporator	Freezer	Split Fin & Tube Type	Split Fin & Tube Type	Split Fin & Tube Type	Split Fin & Tube Type	Split Fin & Tube Type	Split Fin & Tube Type
Sub-Condenser		Natural Convection Type	Natural Convection Type	Natural Convection Type	Natural Convection Type	Natural Convection Type	Natural Convection Type
Dryer		Molecular Sieve XH-9	Molecular Sieve XH-9	Molecular Sieve XH-9	Molecular Sieve XH-9	Molecular Sieve XH-9	Molecular Sieve XH-9
Capillary tube		ID0.75 X L3000	ID0.75 X L4000	ID0.75 X L3000	ID0.75 X L4000	ID0.75 X L3000	ID0.75 X L4000
ground screw		BSBN	BSBN	BSBN	BSBN	BSBN	BSBN

Daniel Enciso16008594중남미총괄|SVC OUTSOURCED10521038249 20150910221211
345801441941140

CARACTERISTICAS

Model		RT29(RT33)F***A** RT29(RT33)F***D**	RT29(RT33)F***C**	RT25(RT28)F***A** RT25(RT28)F***D**	RT25(RT28)F***C**	RT22(RT26)F***A** RT22(RT26)F***D**	RT22(RT26)F***C**
Type		TMF 2 Door					
Rated Input		110~127V/60Hz 220~240V/50~60 Hz	110~127V/60Hz 220~240V/50~60 Hz	110~127V/60Hz 220~240V/50~60 Hz	110~127V/60Hz 220~240V/50~60 Hz	110~127V/60Hz 220~240V/50~60 Hz	110~127V/60Hz 220~240V/50~60 Hz
Compressor	Model	MSV488AL1R	MSV488AL1P	MSV488AL1R	MSV488AL1P	MSV488AL1R	MSV488AL1P
	Type	BLDC (INVERTER)	BLDC (INVERTER)	BLDC (INVERTER)	BLDC (INVERTER)	BLDC (INVERTER)	BLDC (INVERTER)
	Refrigerant	R-600a, 53g	R-600a, 65g	R-600a, 46g	R-600a, 65g	R-600a, 46g	R-600a, 65g
	Oil Charge	200cc	200cc	200cc	200cc	200cc	200cc
Evaporator	Freezer	Split Fin & Tube Type	Split Fin & Tube Type	Split Fin & Tube Type	Split Fin & Tube Type	Split Fin & Tube Type	Split Fin & Tube Type
Sub-Condenser		Natural Convection Type	Natural Convection Type	Natural Convection Type	Natural Convection Type	Natural Convection Type	Natural Convection Type
Dryer		Molecular Sieve XH-9	Molecular Sieve XH-9	Molecular Sieve XH-9	Molecular Sieve XH-9	Molecular Sieve XH-9	Molecular Sieve XH-9
Capillary tube		ID0.75 X L3000	ID0.75 X L4000	ID0.75 X L3000	ID0.75 X L4000	ID0.75 X L3000	ID0.75 X L4000
ground screw		BSBN	BSBN	BSBN	BSBN	BSBN	BSBN

For RT22 and RT25, the volumes of refrigerant for A++,A+ models were 65g and 46g respectively, which are correctly presented.
The volume of refrigerant for A++ differs as the cycle specification is different.

Daniel Enciso16008594중남미총괄|SVC OUTSOURCED10521038249 20150910221211
345801441941140

CARACTERISTICAS

MODEL			RT38(RT42), RT35(RT39), RT32(RT36), RT29(RT33), RT25(RT28), RT22(RT26)			
Temperature	Freezer	Type	Temperature Selection		ON(℃)	OFF(℃)
		F-Sensor	Not applied		–	–
	Refrigerator	R-Sensor	Dispaly bar type(5steps)	Actual set temperature	Rotary type(6steps)	Actual set temperature
			7℃	6.5±2℃	1 step	6.5±2℃
			5℃	5.0±2℃	2 step	5.0±2℃
			3℃	3.0±2℃	3 step	3.0±2℃
			2℃	2.0±2℃	4 step	2.0±2℃
					5 step	1.0±2℃
			1℃	0.5±2℃	6 step	0.5±2℃
Electrical parts	Defrosting	First Defrost Cycle			Not applied	
		Defrost Cycle			Min(6HR), Max(53HR)	
		Pause Time			10 Min	
	Sensor	Refrigerator-Sensor			THERMISTOR(PX-41C, 502AT-2) SPEC (5.0KΩ/25℃)	
		Freezer Evap-Sensor				
		Ambient TEMP-Sensor				

Daniel Enciso16008594중남미총괄|SVC OUTSOURCED10521038249 20150910221211
345801441941140

CARACTERISTICAS

MODEL			RT38(RT42), RT35(RT39)	RT32(RT36), RT29(RT33)	RT25(RT28), RT22(RT26)
Temperature	RATED INPUT		110~127V/60Hz 220V~240V/50~60Hz	←	←
	Compressor	MODEL	MSV488AL1R / MSV488AL1P	←	←
			[ISO Energy] A+(RT**F**A**, RT**F**D**) : MSV488AL1R, A++(RT**F**C**) : MSV488AL1P		
		Overload-Protector	4TM308RFBYY-82	←	←
	Motor-Fan		3612JL-04W	←	←
			3350 ±7%	←	←
			1.92W	←	←
			92mm/3wing	←	←
Electrical parts	Lamp	LED TYPE	FR4, 65*10, 1.6T, 3PKG	←	←
	Heater-Defrost		120V, 160W, 90ohm, 230V, 160W, 330ohm	120V, 130W, 110ohm, 230V, 130W, 407ohm	120V, 120W, 120ohm, 230V,120W, 440ohm
			Metal Sheath Heater	←	←
	Door-Switch		125VAC/1.5A 250VAC/0.75A 1-BUTTON	←	←
	pump Motor		DC12V, 400mA(Optional)	←	Not applied
	Switch for water		AC 250VAC 16A(Optional)	←	Not applied
	MOTOR – ANTI VIRUS PROTECTOR		DC12V, 70mA(Optional)	Not applied	Not applied
	Water valve		DC12V,300mA(Optional)	←	Not applied

Daniel Enciso16008594중남미총괄|SVC OUTSOURCED10521038249 20150910221211
345801441941140

TMF Samsung – Auto diagnóstico

Electronic display

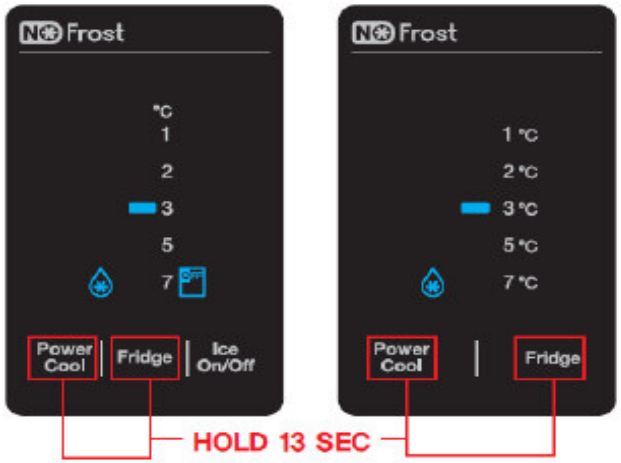

1.- Desconectar y conectar la unidad
2.- Auto diagnóstico durante operación normal
-Power cool y Frigde por 13 segundos
En 7 segundos (2°C,3°C,5°C leds parpadean por 3 segundos)
En 10 segundos (3°C led parpadea por 3 segundos)
En 13 segundos (Ding dong se escucha)
- Dura 60 segundos el auto diagnostico

Ejemplos de errores que pueden a parecer

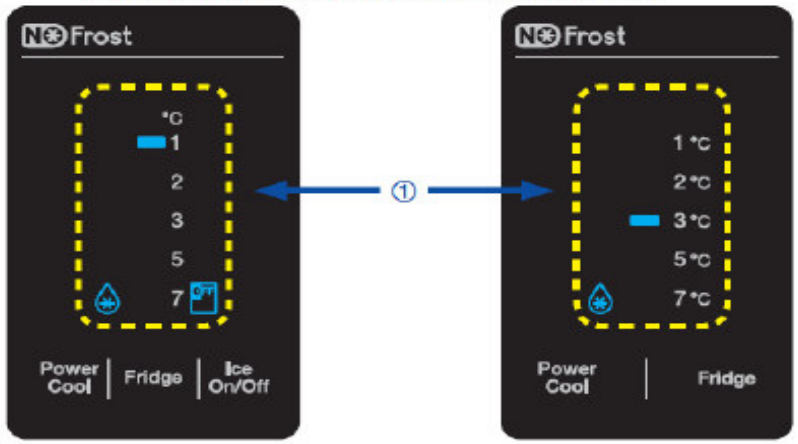

① ERROR DISPLAY
(Refer to Self-Diagnosis Check List below)

Daniel Enciso16008594중남미총괄|SVC OUTSOURCED10521038249 20150910221211
345801441941140

AUTODIAGNOSTICO

Electronic display

NO	Defect Item	Description	ERROR CODE (Temp Display)
1	F-DEF ERROR	Freezer Room Defrost Heater Error	"1℃" LED LAMP
2	EXT – SENSOR	External SENSOR Error	"2℃" LED LAMP
3	R – SENSOR	Fridge Room SENSOR Error	"3℃" LED LAMP
4	F – DEF – SENSOR	Freezer Defrost SENSOR Error	"5℃" LED LAMP
5	F-FAN ERROR	Freezer Room Fan Motor Error	"7℃" LED LAMP
6	ICE MAKER ERROR	ICE MAKER Operation Error ICE Sensor Error ICE Maker Water Pipe Heater Error	'Ice Off" LED LAMP 
7	COMP Run failure ERROR	COMP Run failure ERROR	"Power Cool" LED LAMP 
	COMP IPM FAULT ERROR	COMP IPM FAULT ERROR	
	COMP ABNORMAL CURRENT DETECTION ERROR	COMP Location detection ERROR	
	COMP MOTOR RESTRICTION ERROR	COMP MOTOR Bind ERROR	
	COMP Low Voltage ERROR	COMP Low Voltage ERROR	
	COMP Over Voltage ERROR	COMP Over Voltage ERROR	

Daniel Enciso16008594중남미총괄|SVC OUTSOURCED10521038249 20150910221211

345801441941140

AUTODIAGNOSTICO

Electronic display

NO	Error Code	Item	Description	Trouble Shooting
1	1	F-DEF ERROR	**[Freezer Defrost Heater]** Connector Slipped-Out or Open-Contact, Wire Cut or Short-Circuited, Defective Thermistor Freezer Defrost When the defrosting does not complete even after it does defrosting for more than 120 minutes.	Remove the MAIN PCB CN70 and CN77 connectors from the MAIN PCB and read the continuity between BROWN ↔ ORG wires. (It differs according to the energy consumption.) When it reads 0 Ohm, check the Heater short and when it reads ∞ Ohm, check if the Wire/Thermal Fuse or the Bimetal is Open.
2	2	EXT - SENSOR	Connector Slipped-Out or Open-Contact, Wire Cut or Short-Circuited, Abnormal Sensing Temp (higher than +65℃ or lower than -50℃)	The voltage between MAIN PCB CN31-"1(WHT) ↔ 2(WHT)" should be within 4.5V~0.5V.
3	3	R - SENSOR	Same as the EXT - SENSOR	The voltage between MAIN PCB CN30-"5(ORG) ↔ 7(Gray)" should be within 4.5V~0.5V.
4	5	F - DEF - SENSOR	Same as the EXT - SENSOR	The voltage between MAIN PCB CN30-"4(RED) ↔ 7(Gray)" should be within 4.5V~0.5V.
5	7	F-FAN ERROR	When the related Fan Motor operates, it occurs if the contact of the Feed Back Signal Wire is defective, the Motor Wire is slipped out or the Motor is defective.	The voltage between MAIN PCB CN72-"9(PNK) ↔ 10(GRY)" should be within 7V~12V

Daniel Enciso16008594중남미총괄|SVC OUTSOURCED10521038249 20150910221211

345801441941140

AUTODIAGNOSTICO

Electronic display

6		ICE MAKER ERROR	ICE MAKER SENSOR ERROR ICE MAKER FUNCTION ERROR ** Applies only to the models with Ice Maker.	After replacing the Ice Maker, plug in the unit and check its operation.
7		Comp start failure error	The error code is displayed when the compressor has failed to start.	Check the soldering status of the inverter PCB. (Check if any parts have short-circuited). Check if the DC 16V output is less than 13.5V. Check the Comp and Cycle.
		Compressor IPM Fault Error	The error code is displayed when the compressor IPM fault error has occurred.	
		Comp location detection error	The error code is displayed when the compressor location detection failed.	Check the compressor wire connections. Check the soldering status of the inverter PCB. (Check if any parts have short-circuited). Check the Comp and Cycle.
		Comp motor constraint error	The error code is displayed when the compressor motor is constrained.	Check if the compressor and the Cycle is normal. Check the input voltage. Check the soldering of the inverter PCB. (Check if any parts have short-circuited.)
		Comp low voltage error	The error code is displayed when the AC Input Voltage is too low.	Check the input voltage. (This error occurs when the input voltage is AC 106 V or lower.)
		Comp over voltage error	The error code is displayed when the AC Input Voltage is too high.	Check the input voltage. (This error occurs when the input voltage is AC 310V or higher.)

Daniel Enciso16008594중남미총괄|SVC OUTSOURCED10521038249 20150910221211

345801441941140

AUTODIAGNOSTICO

Rotary Switch

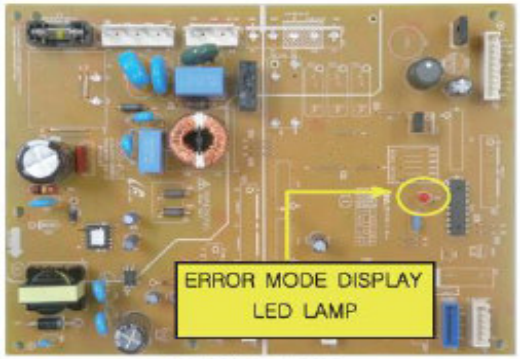

BEST/BETTER

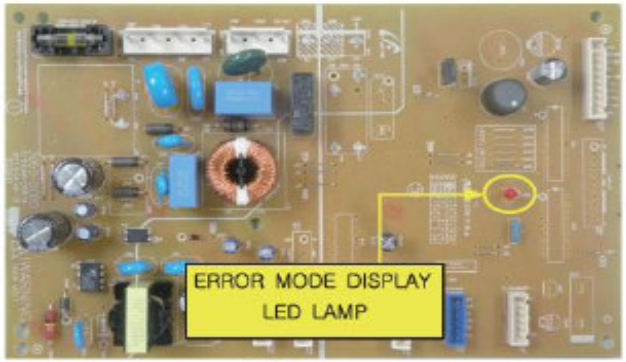

GOOD

1.- Desconectar y conectar la unidad

ITEM	LED Blinking Frequency	Defect Description	Remarks
F-DEF-SENSOR	Twice	- OPEN Defect - SHORT Defect	- -50℃ or lower being detected - +65℃ or higher being detected
EXT-SENSOR	3 times	- OPEN Defect - SHORT Defect	- -50℃ or lower being detected - +65℃ or higher being detected
F-Def-Error	5 times	- When exceeding Maximum heating time and stopping operation	
R-SENSOR	6 times	- OPEN Defect - SHORT Defect	
Rotary Error	9 times	- OPEN Defect - SHORT Defect	
INVERTER COMP	10 times	- Upon COMP ERROR	- When COMP ERROR occurs
F-FAN ERROR	11 times	- F-FAN Restriction ERROR occurs	

No.	Defect Item	LED Blinking Frequency	Defect Description
1	F-DEF-SENSOR	Twice	F-ROOM DEFROST SENSOR RELATED ERROR
2	EXT-SENSOR	3 times	EXT DEFROST SENSOR RELATED ERROR
3	F-Def-Error	5 times	F-DEF RELATED ERROR
4	R-SENSOR	6 times	R-SENSOR RELATED ERROR
5	Rotary Error	9 times	ROTARY Switch ERROR
6	INVERTER COMP. ERROR	10 times	INVERTER COMP ERROR
7	F-FAN ERROR	11 times	F-FAN RELATED ERROR

Daniel Enciso16008594중남미총괄|SVC OUTSOURCED10521038249 20150910221211
345801441941140

AUTODIAGNOSTICO

Rotary Switch

NO	LED Blinking Frequency	Item	Description	Trouble Shooting
1	Twice	F-DEF -SENSOR	Connector Slipped-Out or Open-Contact, Wire Cut or Short-Circuited, Abnormal Sensing Temp (higher than +65℃ or lower than -50℃)	The voltage between MAIN PCB CN30-"4(RED) ↔ 7(Gray)" should be within 4.5V~0.5V.
2	3 times	EXT-SENSOR	Connector Slipped-Out or Open-Contact, Wire Cut or Short-Circuited, Abnormal Sensing Temp (higher than +65℃ or lower than -50℃)	The voltage between MAIN PCB CN31-"1(WHT) ↔ 2(WHT)" should be within 4.5V~0.5V.
3	5 times	F-DEF-ERROR	**[Freezer Defrost Heater]** Connector Slipped-Out or Open-Contact, Wire Cut or Short-Circuited, Defective Thermistor Freezer Defrost When the defrosting does not complete even after it does defrosting for more than 120 minutes.	Remove the MAIN PCB CN70 and CN77 connectors from the MAIN PCB and read the continuity between BROWN ↔ ORG wires. (It differs according to the energy consumption.) When it reads 0 Ohm, check the Heater short and when it reads ∞ Ohm, check if the Wire/Thermal Fuse or the Bimetal is Open.
4	6 times	R-SENSOR	Connector Slipped-Out or Open-Contact, Wire Cut or Short-Circuited, Abnormal Sensing Temp (higher than +65℃ or lower than -50℃)	The voltage between MAIN PCB CN30-"5(ORG) ↔ 7(Gray)" should be within 4.5V~0.5V.
5	9 times	Rotary Error	PBA-Rotary Switch Slipped-Out or Open-Contact, Wire Cut or Short-Circuited,Switch Part Defect	The voltage between MAIN PCB CN30-"3(BRN)↔ 7(Gray)" should be within 4.5V~0.5V.

Daniel Enciso16008594중남미총괄|SVC OUTSOURCED10521038249 20150910221211
345801441941140

AUTODIAGNOSTICO

Rotary Switch

6	10 times	Comp start failure error	The error code is displayed when the compressor has failed to start.	Check the soldering status of the inverter PCB. (Check if any parts have short-circuited). Check if the DC 16V output is less than 13.5V. Check the Comp and Cycle.
		Compressor IPM Fault Error	The error code is displayed when the compressor IPM fault error has occurred.	
		Comp location detection error	The error code is displayed when the compressor location detection failed.	Check the compressor wire connections. Check the soldering status of the inverter PCB. (Check if any parts have short-circuite d). Check the Comp and Cycle.
		Comp motor constraint error	The error code is displayed when the compressor motor is constrained.	Check if the compressor and the Cycle is normal. Check the input voltage. Check the soldering of the inverter PCB. (Check if any parts have short-circuited.)
		Comp low voltage error	The error code is displayed when the AC Input Voltage is too low.	Check the input voltage. (This error occurs when the input voltage is AC 106 V or lower.)
		Comp over voltage error	The error code is displayed when the AC Input Voltage is too high.	Check the input voltage. (This error occurs when the input voltage is AC 310V or higher.)
7	11 times	F-FAN ERROR	When the related Fan Motor operates, it occurs if the contact of the Feed Back Signal Wire is defective, the Motor Wire is slipped out or the Motor is defective.	The voltage between MAIN PCB CN72-"9(PNK) ↔ 10(GRY)" should be within 7V~12V

Daniel Enciso16008594중남미총괄|SVC OUTSOURCED10521038249 20150910221211

345801441941140

AUTODIAGNOSTICO

Como detectar el defecto? PCB INVERTER AUTODIAGNOSTICO

Detailed Analytic Scientific Concrete Speedy

Frecuencia de parpadeo de LED	Descripción	Puntos a Verificar
	Operación Normal	N/A
	Inicio de falla	1. Verificar los pines de compresor (U,V,W) 2. Verificar IPM pin por corto circuito 3. Check IPM operating Voltage (under DC 13.5V) 4. Otros casos, verificar ciclo de compresor
	SMP falla	
	Detección de Corrientes Anormal	1. Verificar conexiones de Compresor(U,V,W) 2. Verificar el reverso de PCB pistas dañadas 3. Otros casos, verificar ciclo de compresor
	Motor Bloqueado	1. Verificar el reverso de PCB pistas dañadas 2. Verificar oscilación de Voltaje de entrada 3. Otros casos, verificar ciclo de compresor
	Voltaje Bajo	1. Verificar voltaje de alimentación AC53V(Voltaje de entrada AC110~127V) o AC106V(Voltaje de entradaAC220~240V) 2. Verificar reverso de PCB, pistas dañadas
	Voltaje Alto	1. Verificar voltaje de alimentación AC155V(Voltaje de entrada AC110~127V) o AC310V(Voltaje de entradaAC220~240V) 2. Verificar reverso de PCB, pistas dañadas

Daniel Enciso16008594중남미총괄|SVC OUTSOURCED10521038249 20150910221211

345801441941140

MODO FORZADO

TMF Samsung – Modo forzado

Electronic display

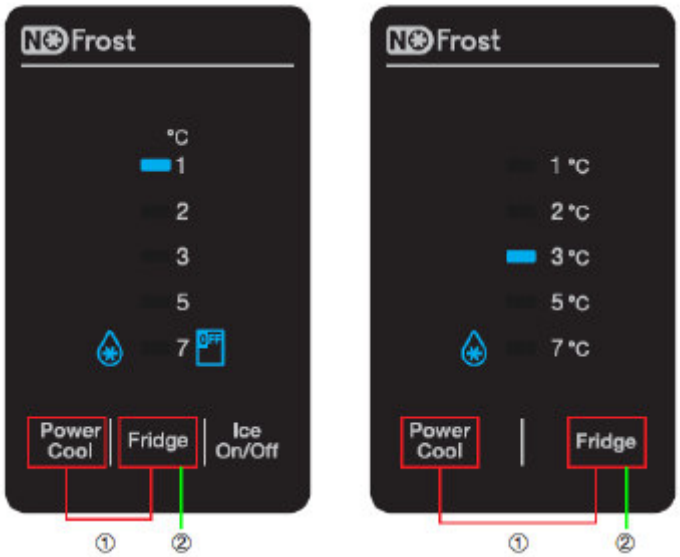

1.- Power Cool-Fridge por 6 segundos
2.- Presionar Fridge

Each time the Test button is pressed, it will change in the following order,
Forced Operation → Forced F-Defrost → Cancellation (Normal Operation)

A.- Forced Operation
B.- Forced F Defrost
C.- Cancellation

A.- Forced Operation

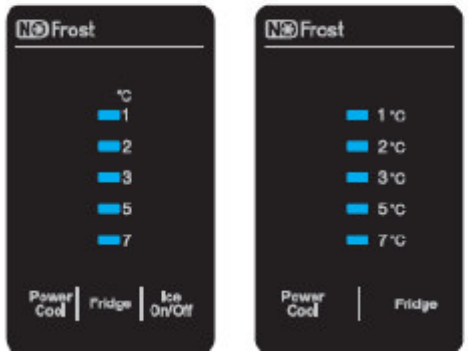

B.- Forced F Defrost

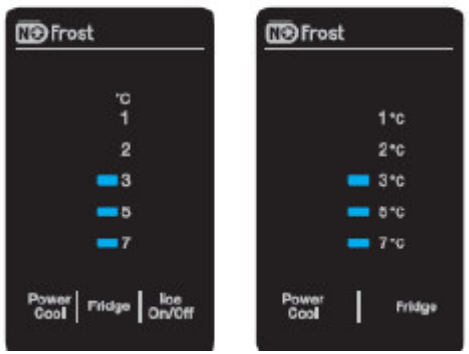

Daniel Enciso16008594중남미총괄|SVC OUTSOURCED10521038249 20150910221211
345801441941140

TMF Samsung – Modo forzado

Rotary switch



1.- Cambiar de Coldest a Dead zone 3 veces, en el lapso de mas de 1s y menos de 5s
Dead zone: Espacio entre 5 y 6

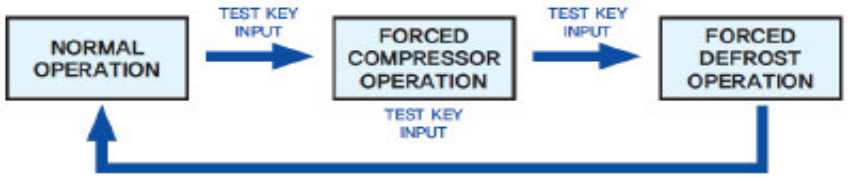

A.- Forced Comp operation
B.- Forced Defrost operation
C.- Normal Operation

345801441941140

MODO DEMO

TMF Samsung – Modo Demo

Electronic display

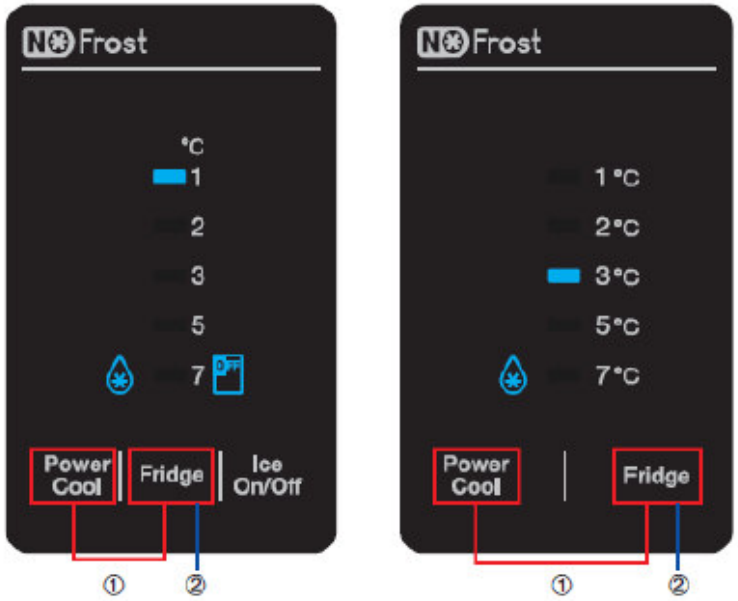

1.- Presionar Power cool y Fridge por 7 segundos
(2°C,3°C,5°C leds parpadean por 3 segundos)
2.- Presionar Fridge (Ding dong)
Demo mode. Compresor no funciona
3.- Cancelar : Paso 1 y 2 o Desconectar. Si temperatura alcanza mas de 65°C, regresa a operación normal.

① Press the Power Cool + Fridge Key buttons for 7 seconds simultaneously.
Then, the Display LEDs will blink for 3 seconds. At this time, release the buttons
② and, press the Fridge button once.

Daniel Enciso16008594중남미총괄|SVC OUTSOURCED10521038249 20150910221211

345801441941140

FUNCION ESTADO DE CARGA

Durante la operación normal presionar POWER COOL y FRIDGE por 7 seg, cuando parpadeen los leds 2°C – 3°C – 5 °C, soltar y presionar POWER COOL

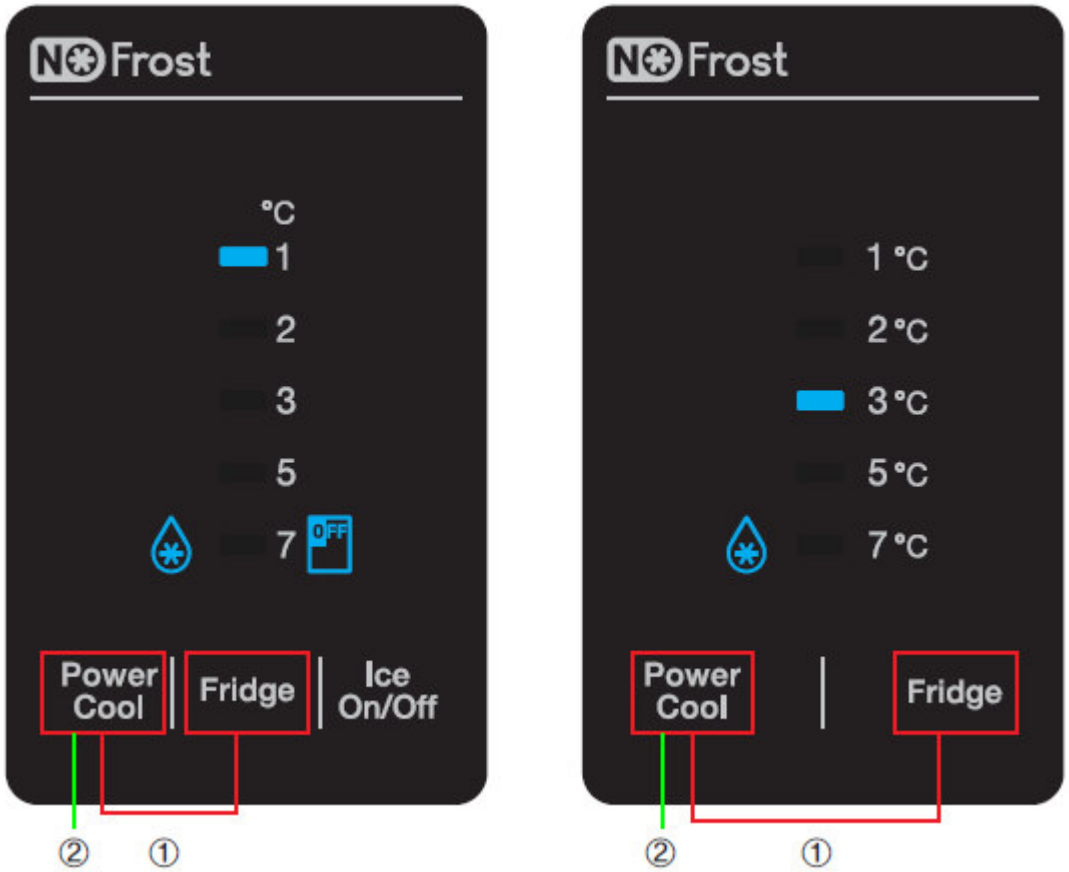

345801441941140

FUNCION ESTADO DE CARGA

※ Load Mode Check List

NO	Category	DISPLAY LED	Description
①	COMP	Fridge "1℃" Indicator LED ON	LED On when Comp is running
②	F-Defrost HEATER	Fridge "2℃" Indicator LED ON	LED On when the Freezer Defrost Heater is on
③	Overload	Fridge "3℃" Indicator LED ON	LED On when the ambient temperature is over 34℃
④	Low Temperature	Fridge "5℃" Indicator LED ON	LED On when the ambient temperature is lower than 23℃
⑤	Demo Mode	Fridge "7℃" Indicator LED ON	LED On when the unit is on Demo Mode
⑥	F-FAN	POWER COOL Indicator LED ON	F-FAN ON
⑦	Normal Operation	Fridge "3℃","5℃" Indicator LEDs OFF	When the ambient temperature is between 24℃~33℃

Daniel Enciso16008594중남미총괄|SVC OUTSOURCED10521038249 20150910221211
345801441941140

FUNCION DE AJUSTE

Durante la operación normal presionar POWER COOL y FRIDGE por 4 seg, cuando todos los leds enciendan, soltar y presionar POWER COOL

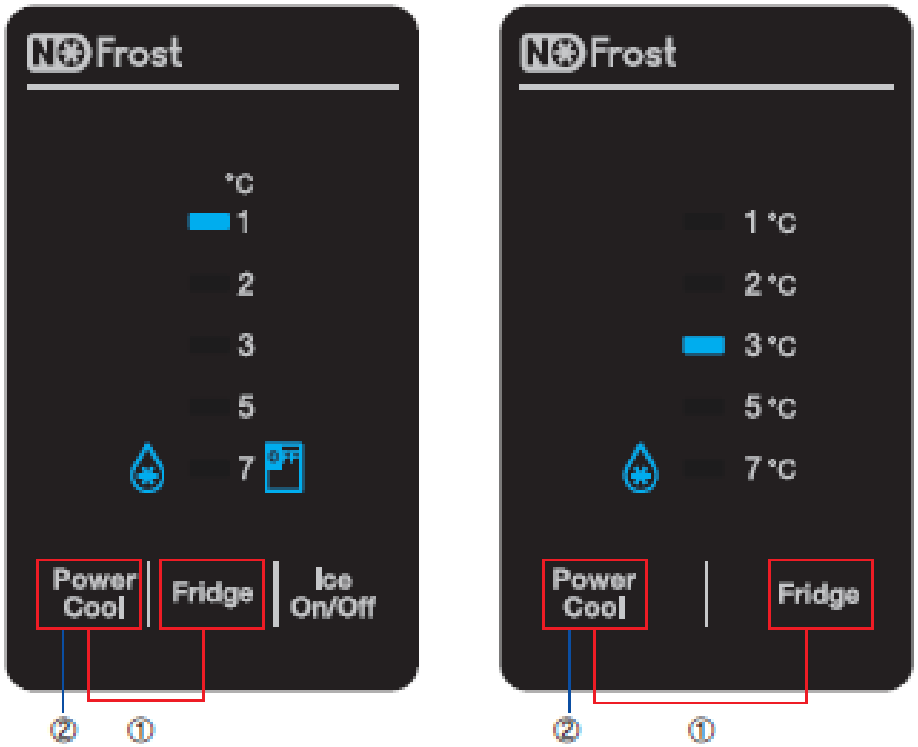

FUNCION DE AJUSTE

Option Mode & Button Control Description

OPTION # Select MODE

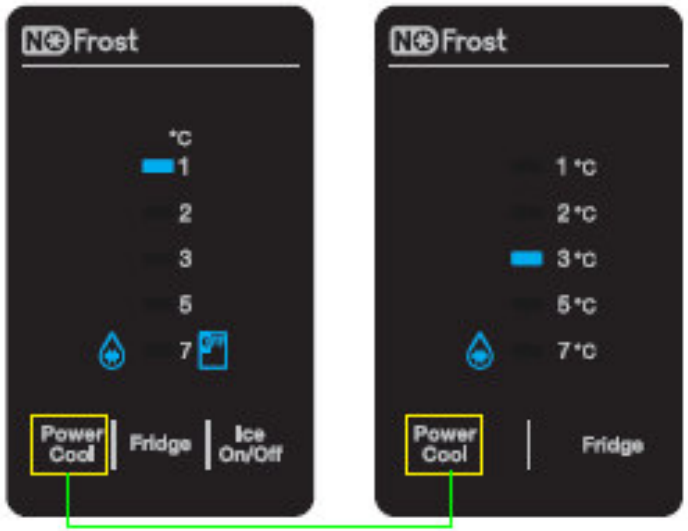

OPTION # INCREASE BY ONE DEGREE
(Rotation Type)

OPTION SET-VALUE SELECT MODE

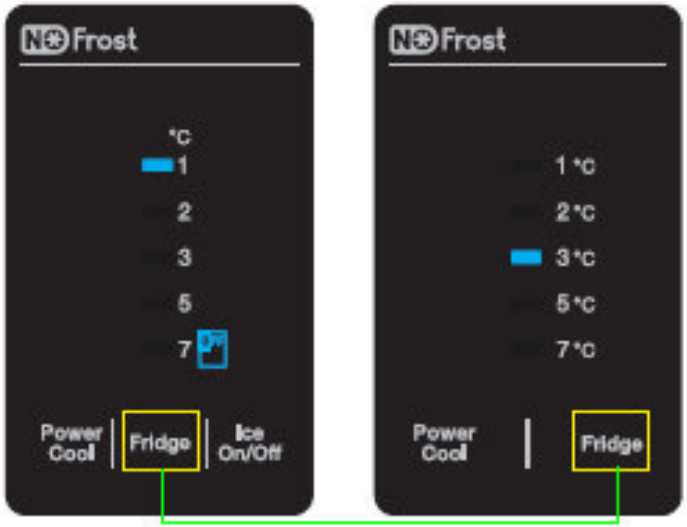

OPTION SET VALUE INCREASE BY ONE DEGREE
(Rotation Type)

※ Input Buttons for Display Codes

Display Code	Input Key
OPTION #	Input with the Power Cool Button with the Power Cool LED On
OPTION SET VALUE	Input with the Fridge Button with Power Cool LED Off

Daniel Enciso16008594중남미총괄|SVC OUTSOURCED10521038249 20150910221211

345801441941140

FUNCION DE AJUSTE

- The Bar Type Display Panel shows the numbers as shown in the following tables (Binary Type)

Value	0	1	2	3	4	5	6	7	8	9	10	11	12	13	14	15
"1℃"	□	□	□	□	□	□	□	□	□	□	□	□	□	□	□	□
"2℃"	□	□	□	□	□	□	□	□	■	■	■	■	■	■	■	■
"3℃"	□	□	□	□	■	■	■	■	□	□	□	□	■	■	■	■
"5℃"	□	□	■	■	□	□	■	■	□	□	■	■	□	□	■	■
"7℃"	□	■	□	■	□	■	□	■	□	■	□	■	□	■	□	■

Value	16	17	18	19	20	21	22	23	24	25	26	27	28	29	30	31
"1℃"	■	■	■	■	■	■	■	■	■	■	■	■	■	■	■	■
"2℃"	□	□	□	□	□	□	□	□	■	■	■	■	■	■	■	■
"3℃"	□	□	□	□	■	■	■	■	□	□	□	□	■	■	■	■
"5℃"	□	□	■	■	□	□	■	■	□	□	■	■	□	□	■	■
"7℃"	□	■	□	■	□	■	□	■	□	■	□	■	□	■	□	■

Daniel Enciso16008594중남미총괄|SVC OUTSOURCED10521038249 20150910221211

345801441941140

FUNCION DE AJUSTE

Configuración de fabrica



OPTION # : "0"

OPTION SET-VALUE : "0"

Daniel Enciso16008594중남미총괄|SVC OUTSOURCED10521038249 20150910221211

345801441941140

FUNCION DE AJUSTE

Setting Item	Fridge Temp Shift
Option Item	Location : Temp Display
	1

Setting Value Freezer Temp Value	Option Value
0	0
1	-0.5°C
2	-1.0°C
3	-1.5°C
4	-2.0°C
5	-2.5°C
6	-3.0°C
7	-3.5°C
8	+0.5°C
9	+1.0°C
10	+1.5°C
11	+2.0°C
12	+2.5°C
13	+3.0°C
14	+3.5°C
15	+4.0°C

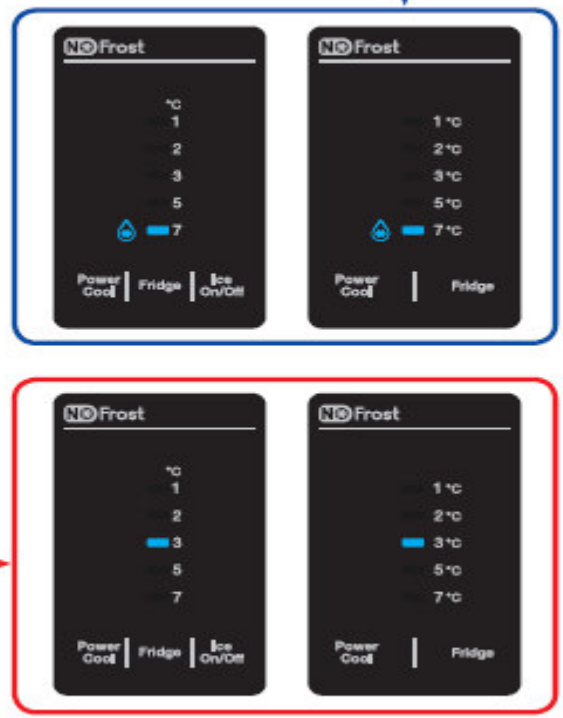

Daniel Enciso16008594중남미총괄|SVC OUTSOURCED10521038249 20150910221211
345801441941140

TABLA SENSOR DE TEMPERATURA

℃	℉	Voltage	Ω	℃	℉	Voltage	Ω	℃	℉	Voltage	Ω
-50	-58	4.694	153319	-5	23	3.107	16419	40	104	1.153	2997
-49	-56.2	4.677	144794	-4	24.8	3.057	15731	41	105.8	1.124	2899
-48	-54.4	4.659	136798	-3	26.6	3.006	15076	42	107.6	1.095	2805
-47	-52.6	4.641	129294	-2	28.4	2.955	14452	43	109.4	1.068	2714
-46	-50.8	4.622	122248	-1	30.2	2.904	13857	44	111.2	1.040	2627
-45	-49	4.602	115631	0	32	2.853	13290	45	113	1.014	2543
-44	-47.2	4.581	109413	1	33.8	2.802	12749	46	114.8	0.988	2462
-43	-45.4	4.560	103569	2	35.6	2.751	12233	47	116.6	0.963	2384
-42	-43.6	4.537	98073	3	37.4	2.700	11741	48	118.4	0.938	2309
-41	-41.8	4.514	92903	4	39.2	2.649	11271	49	120.2	0.914	2237
-40	-40	4.490	88037	5	41	2.599	10823	50	122	0.891	2167
-39	-38.2	4.465	83456	6	42.8	2.548	10395	51	123.8	0.868	2100
-38	-36.4	4.439	79142	7	44.6	2.498	9986	52	125.6	0.846	2036
-37	-34.6	4.412	75077	8	46.4	2.449	9596	53	127.4	0.824	1973
-36	-32.8	4.385	71246	9	48.2	2.399	9223	54	129.2	0.803	1913
-35	-31	4.356	67634	10	50	2.350	8867	55	131	0.783	1855
-34	-29.2	4.326	64227	11	51.8	2.301	8526	56	132.8	0.762	1799
-33	-27.4	4.296	61012	12	53.6	2.253	8200	57	134.6	0.743	1745
-32	-25.6	4.264	57977	13	55.4	2.205	7888	58	136.4	0.724	1693
-31	-23.8	4.232	55112	14	57.2	2.158	7590	59	138.2	0.706	1642
-30	-22	4.199	52406	15	59	2.111	7305	60	140	0.688	1594
-29	-20.2	4.165	49848	16	60.8	2.064	7032	61	141.8	0.670	1547
-28	-18.4	4.129	47431	17	62.6	2.019	6771	62	143.6	0.653	1502
-27	-16.6	4.093	45146	18	64.4	1.974	6521	63	145.4	0.636	1458
-26	-14.8	4.056	42984	19	66.2	1.929	6281	64	147.2	0.620	1416
-25	-13	4.018	40938	20	68	1.885	6052	65	149	0.604	1375
-24	-11.2	3.980	39002	21	69.8	1.842	5832	66	150.8	0.589	1335
-23	-9.4	3.940	37169	22	71.6	1.799	5621	67	152.6	0.574	1297
-22	-7.6	3.899	35433	23	73.4	1.757	5419	68	154.4	0.560	1260
-21	-5.8	3.858	33788	24	75.2	1.716	5225	69	156.2	0.546	1225
-20	-4	3.816	32230	25	77	1.675	5039	70	158	0.532	1190
-19	-2.2	3.773	30752	26	78.8	1.636	4861	71	159.8	0.519	1157
-18	-0.4	3.729	29350	27	80.6	1.596	4690	72	161.6	0.506	1125
-17	1.4	3.685	28021	28	82.4	1.558	4526	73	163.4	0.493	1093
-16	3.2	3.640	26760	29	84.2	1.520	4369	74	165.2	0.481	1063
-15	5	3.594	25562	30	86	1.483	4218	75	167	0.469	1034
-14	6.8	3.548	24425	31	87.8	1.447	4072	76	168.8	0.457	1006
-13	8.6	3.501	23345	32	89.6	1.412	3933	77	170.6	0.446	978
-12	10.4	3.453	22320	33	91.4	1.377	3799	78	172.4	0.435	952
-11	12.2	3.405	21345	34	93.2	1.343	3670	79	174.2	0.424	926
-10	14	3.356	20418	35	95	1.309	3547	80	176	0.414	902
-9	15.8	3.307	19537	36	96.8	1.277	3428	81	177.8	0.404	877
-8	17.6	3.258	18698	37	98.6	1.253	3344	82	179.6	0.394	854
-7	19.4	3.208	17901	38	100.4	1.213	3204	83	181.4	0.384	832
-6	21.2	3.158	17142	39	102.2	1.183	3098	84	183.2	0.375	810

Daniel Enciso16008594중남미총괄|SVC OUTSOURCED10521038249 20150910221211

345801441941140

WIRING DIAGRAM

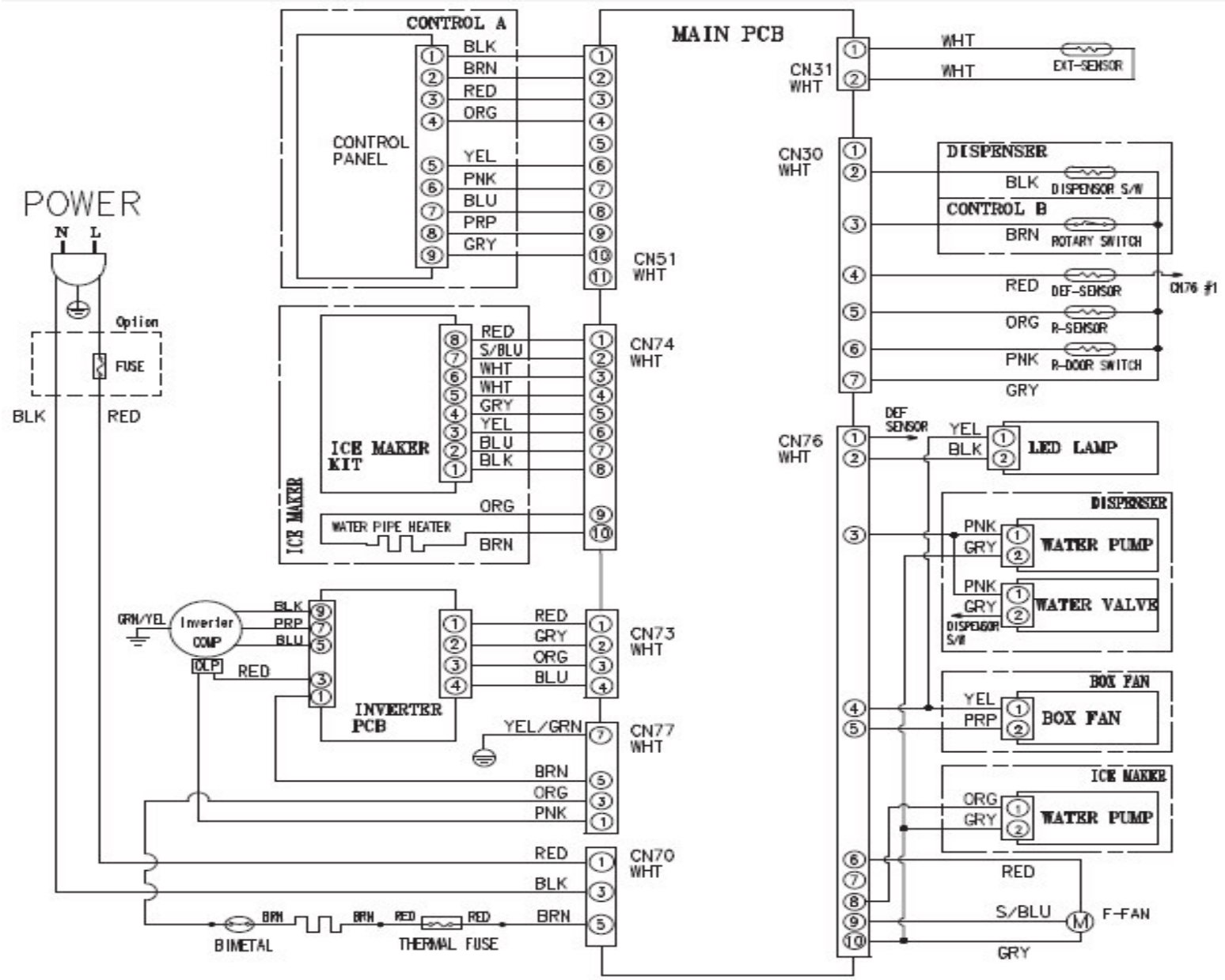

Daniel Enciso16008594중남미총괄|SVC OUTSOURCED10521038249 20150910221211

345801441941140

PCB DIAGRAM

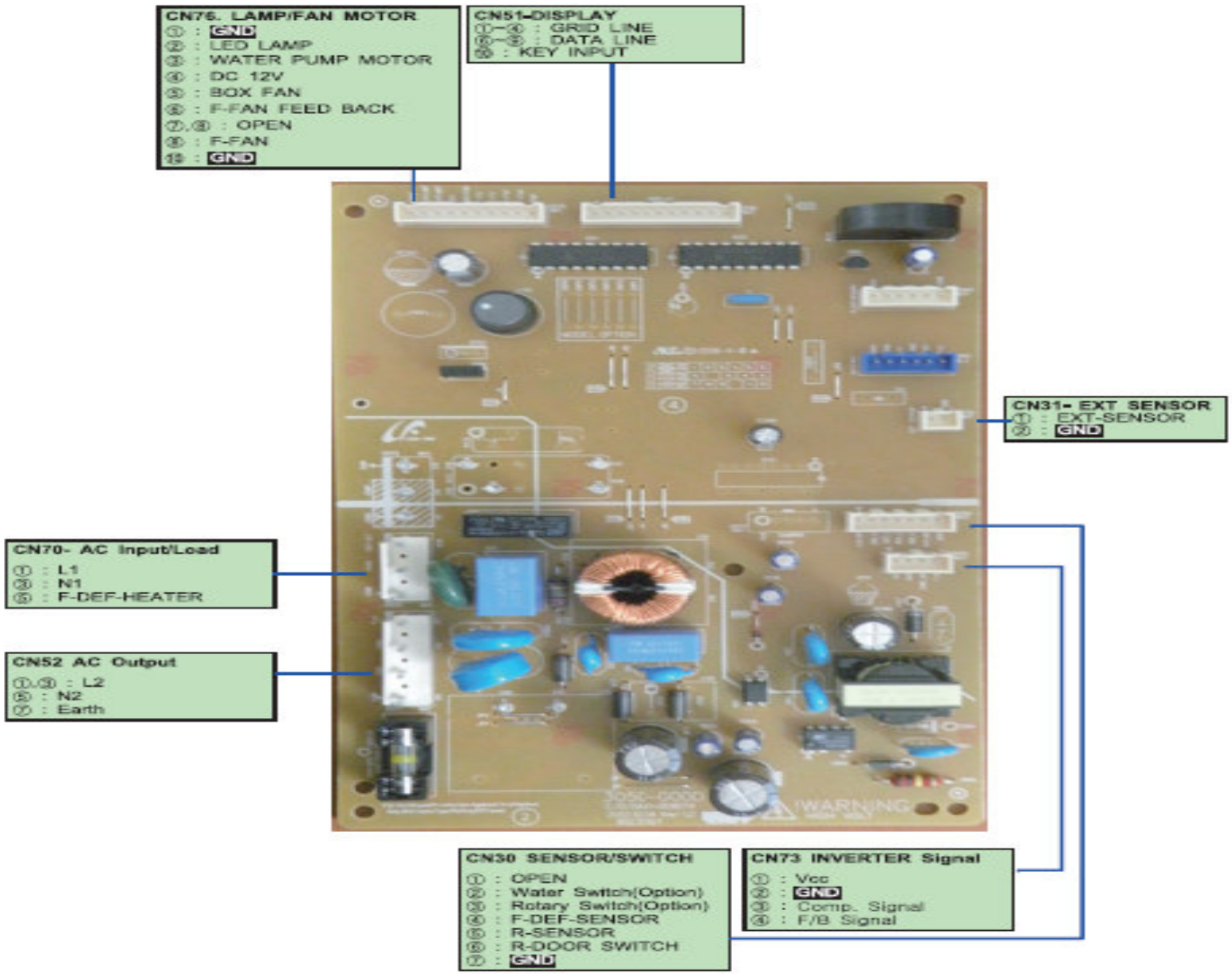

Daniel Enciso16008594중남미총괄|SVC OUTSOURCED10521038249 20150910221211
345801441941140

PCB DIAGRAM

AC IN COMP

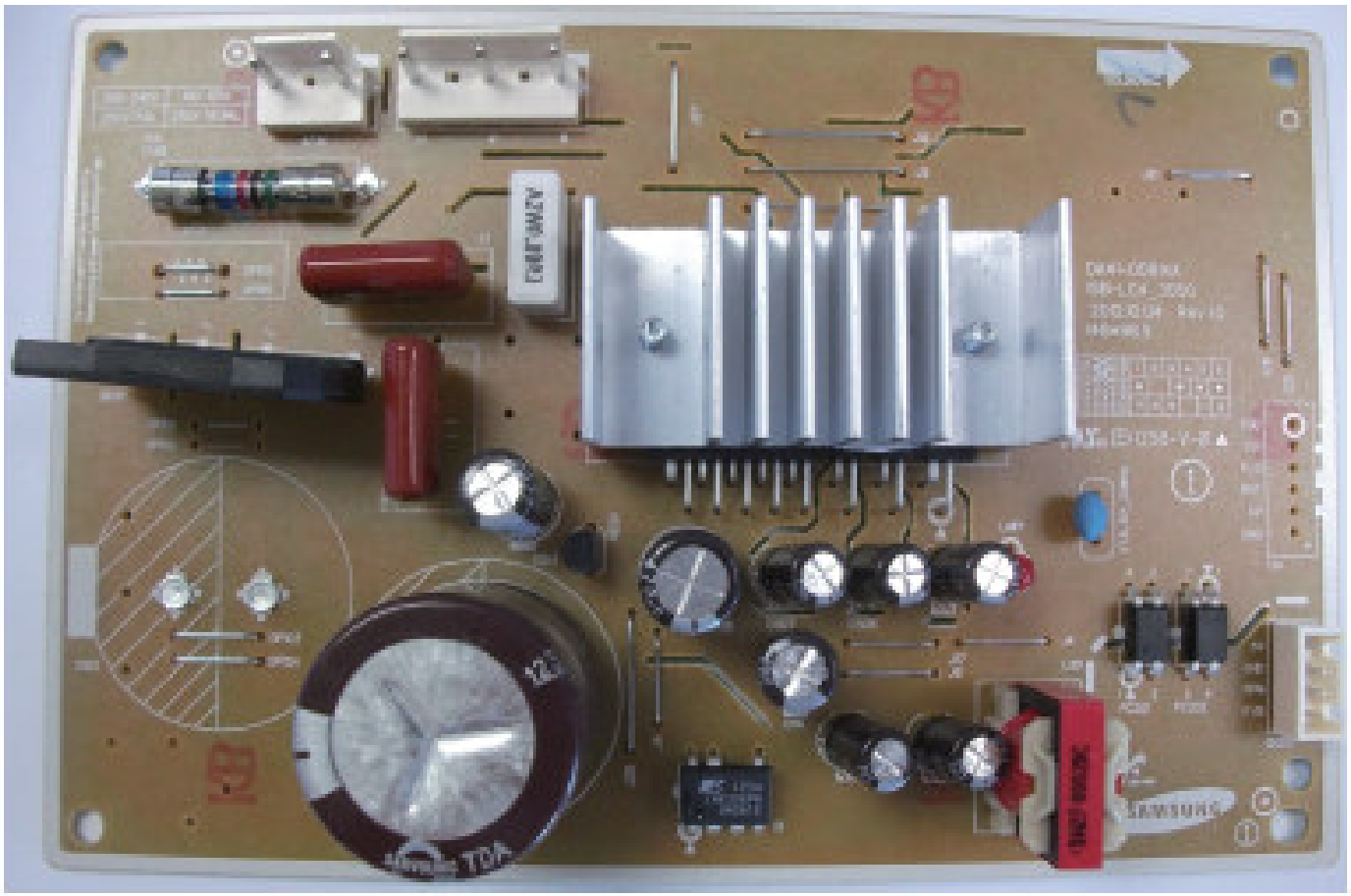

①: DC 5V
②: GND
③: Comp RPM
④: Comp Feedback

Daniel Enciso16008594중남미총괄|SVC OUTSOURCED10521038249 20150910221211
345801441941140

BLOCK DIAGRAM

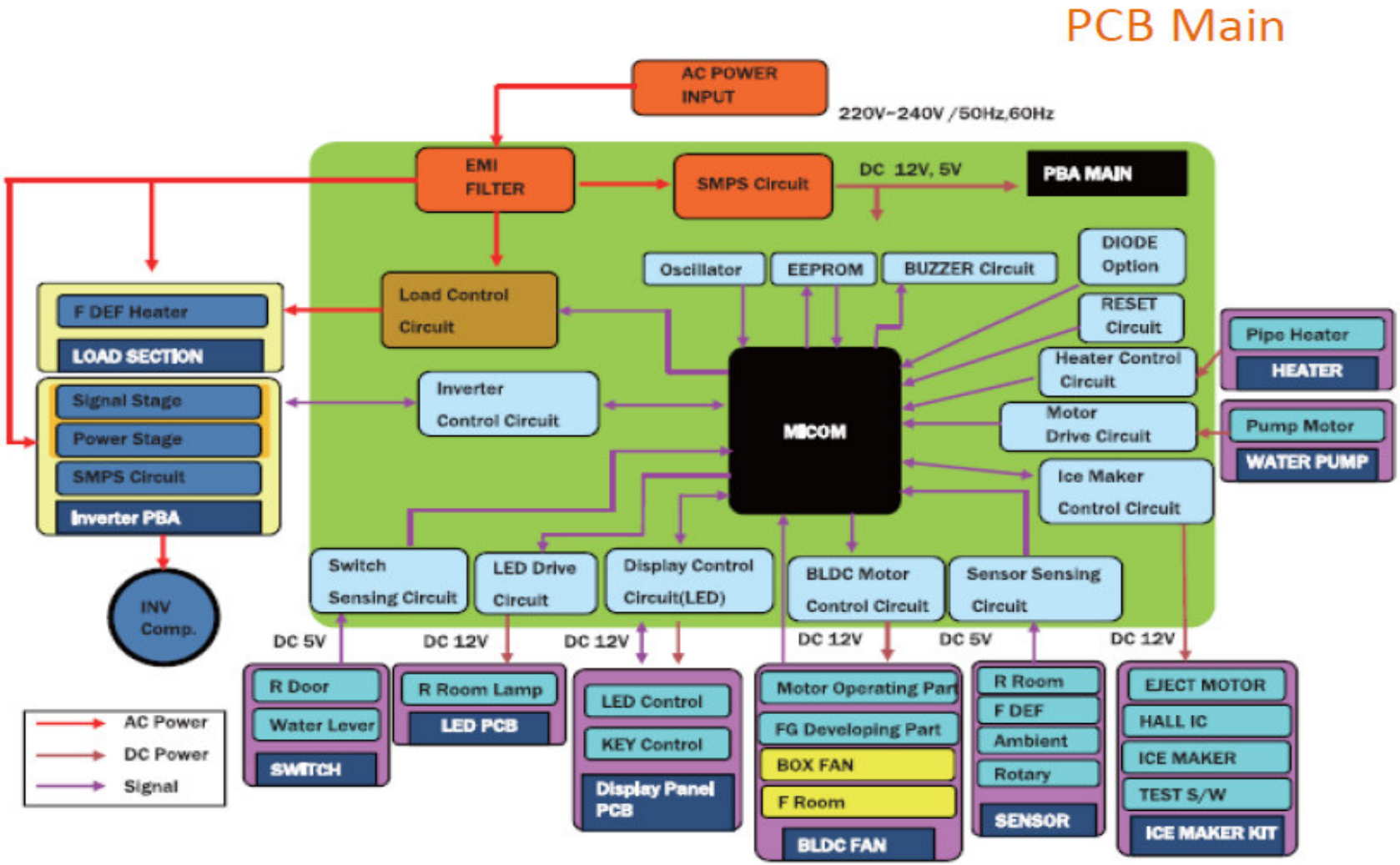

Daniel Enciso16008594중남미총괄|SVC OUTSOURCED10521038249 20150910221211
345801441941140

BLOCK DIAGRAM

PCB Inverter

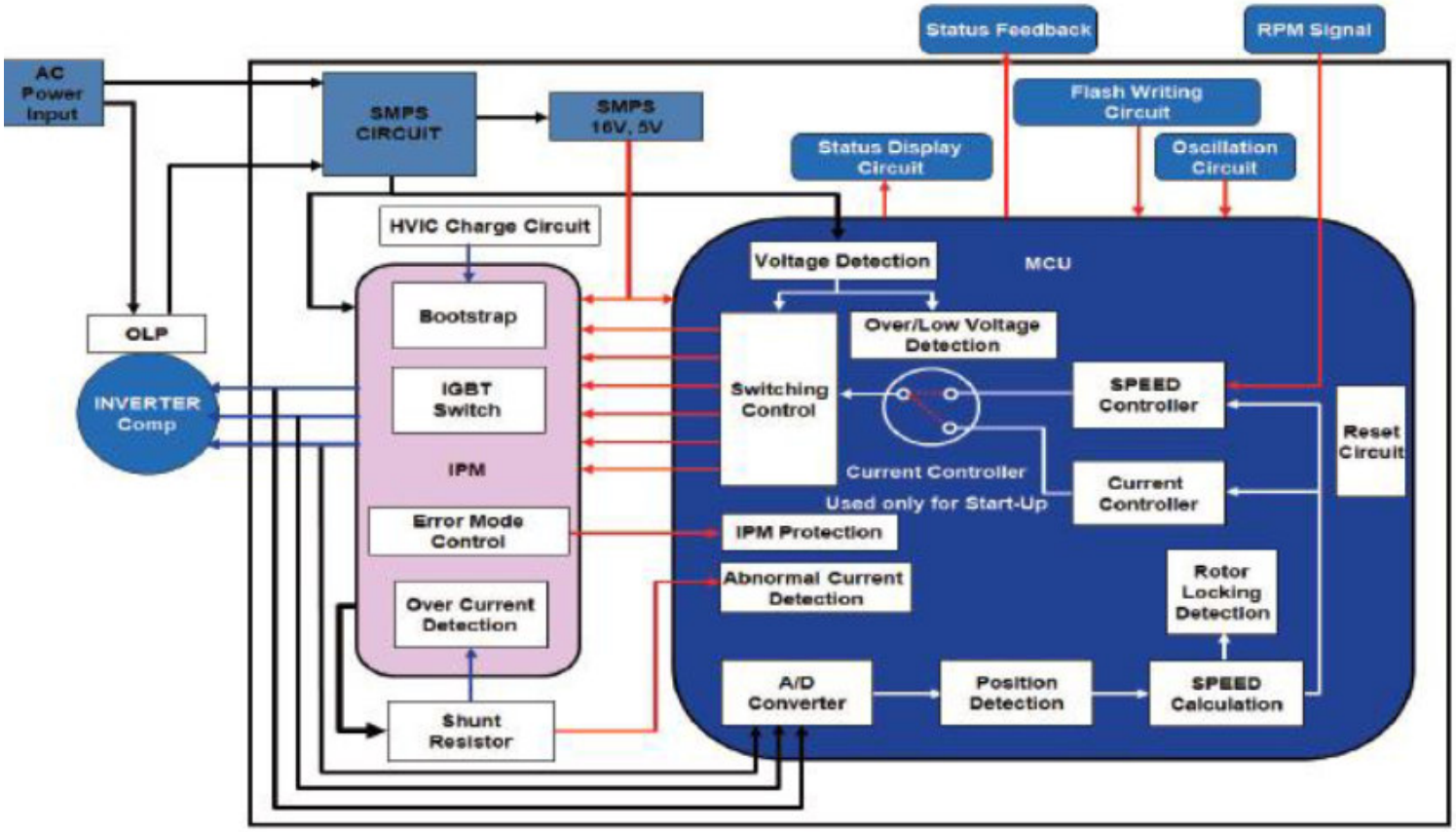

Intelligent Power Module

IGBT (isolated gate bipolar transistor)
(Transistor bipolar de puerta aislada)

Daniel Enciso16008594중남미총괄|SVC OUTSOURCED10521038249 20150910221211

345801441941140

VERIFICACIÓN DE COMPONENTES

Voltaje de entrada PCB MAIN

Voltaje 120 V	Diagrama Eléctrico
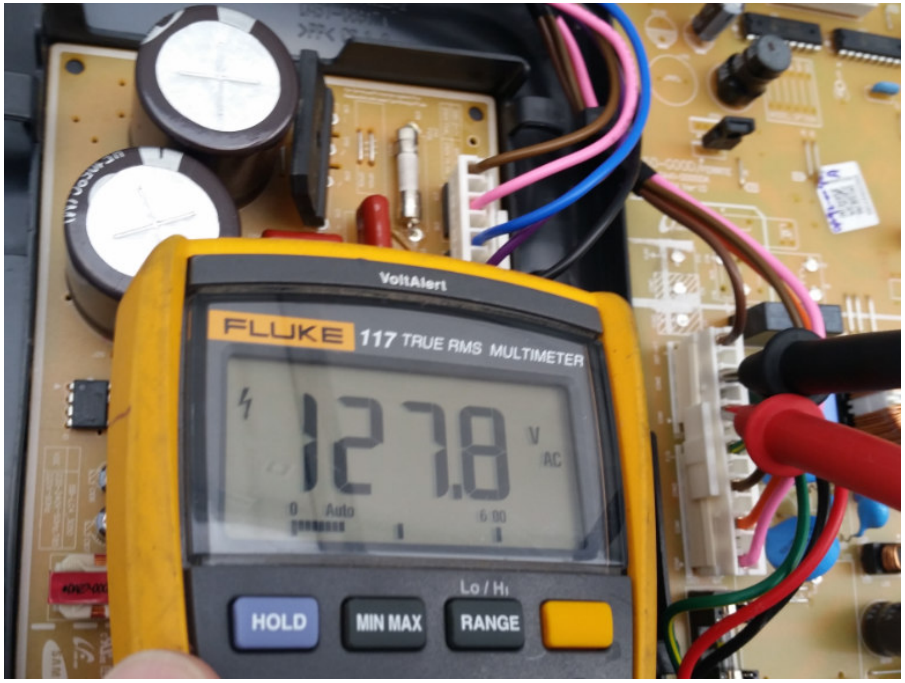	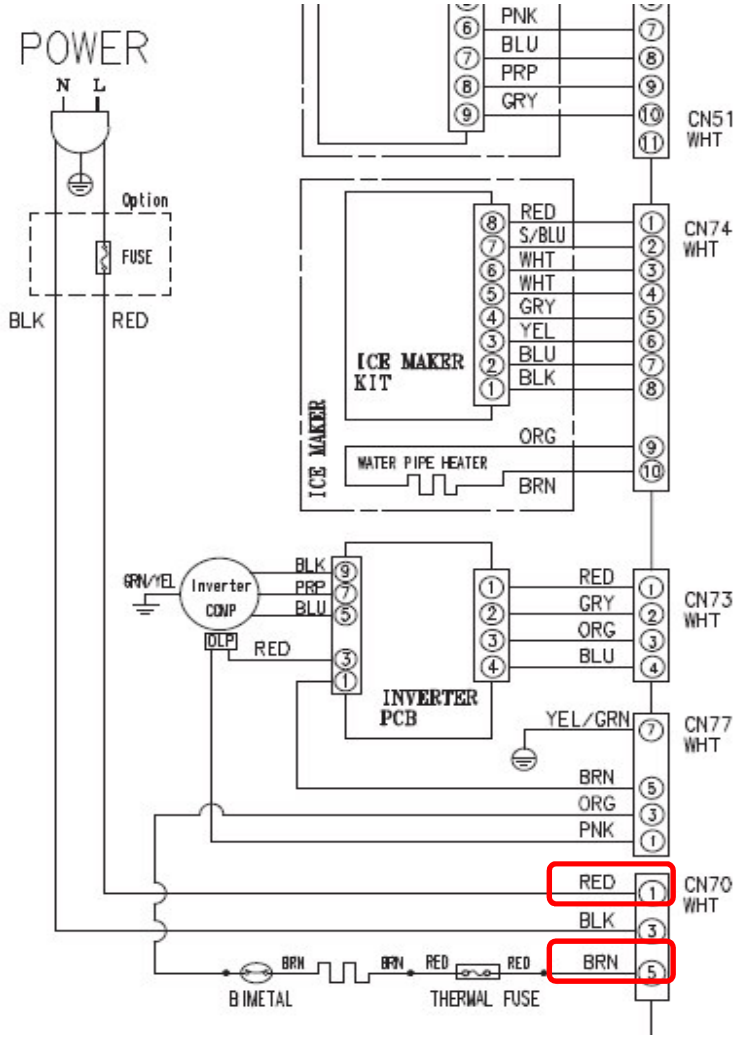

Daniel Enciso16008594중남미총괄|SVC OUTSOURCED10521038249 20150910221211
345801441941140

VERIFICACIÓN DE COMPONENTES

Defrost Heater

Voltaje 120 V , Resistencia Ohm 91 Ohm	Diagrama Eléctrico
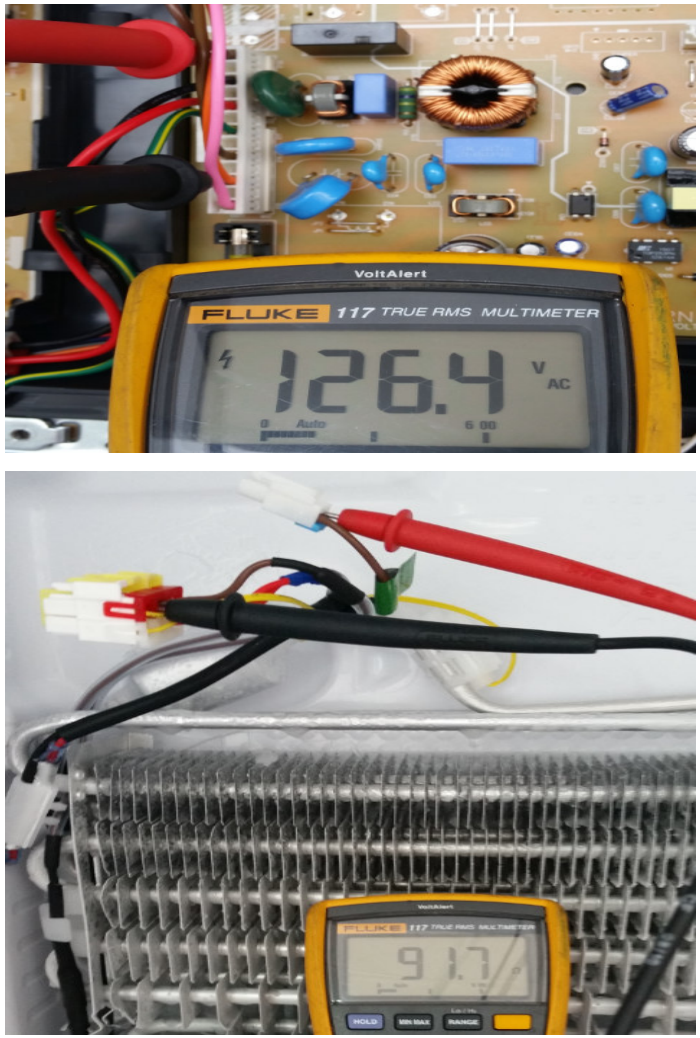	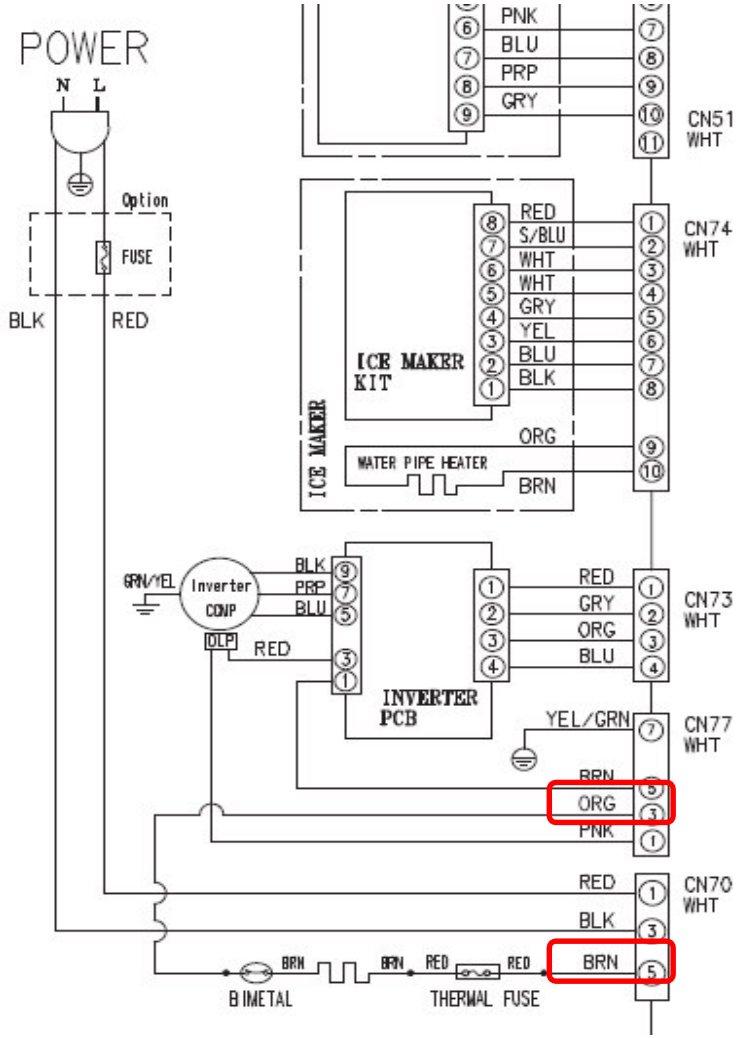

Daniel Enciso16008594중남미총괄|SVC OUTSOURCED10521038249 20150910221211
345801441941140

VERIFICACIÓN DE COMPONENTES

Voltaje Salida PCB MAIN

Voltaje 120 Vac	Diagrama Eléctrico

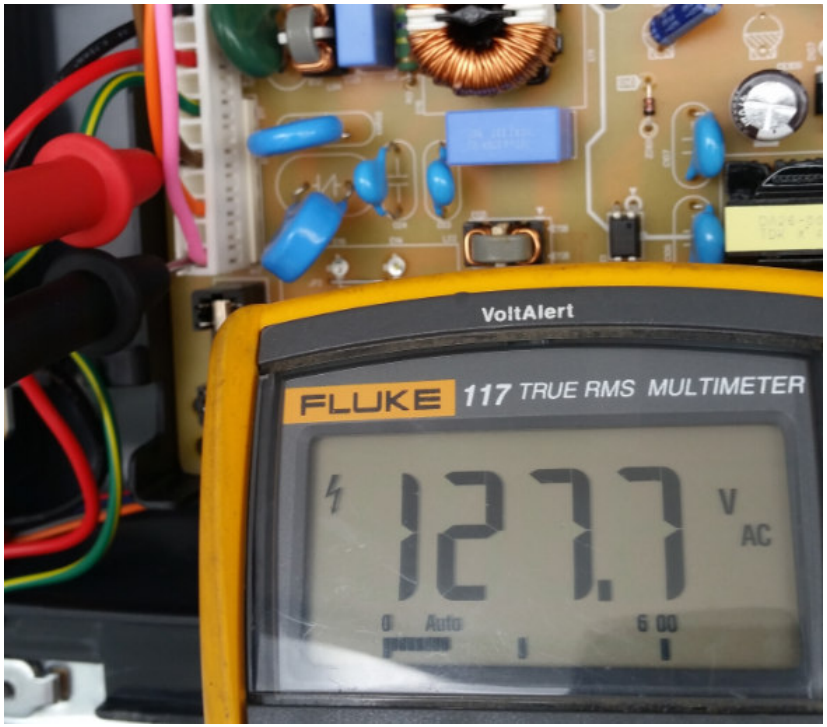

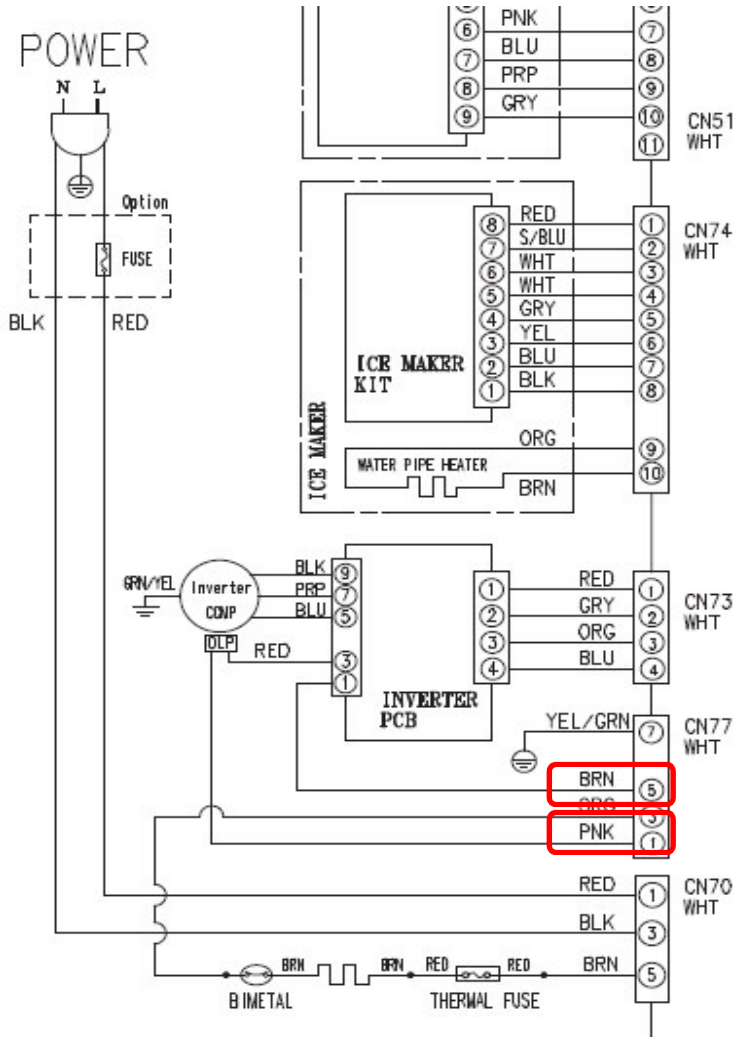

Daniel Enciso16008594중남미총괄|SVC OUTSOURCED10521038249 20150910221211
345801441941140

VERIFICACIÓN DE COMPONENTES

Voltaje entrada PCB INVERTER

Voltaje 120 Vac, OLP	Diagrama Eléctrico
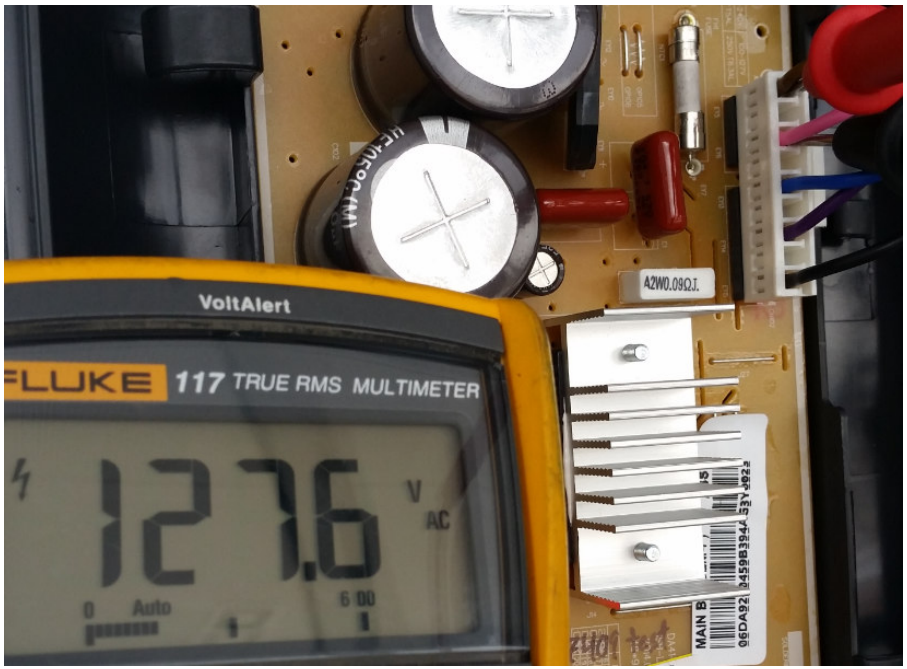	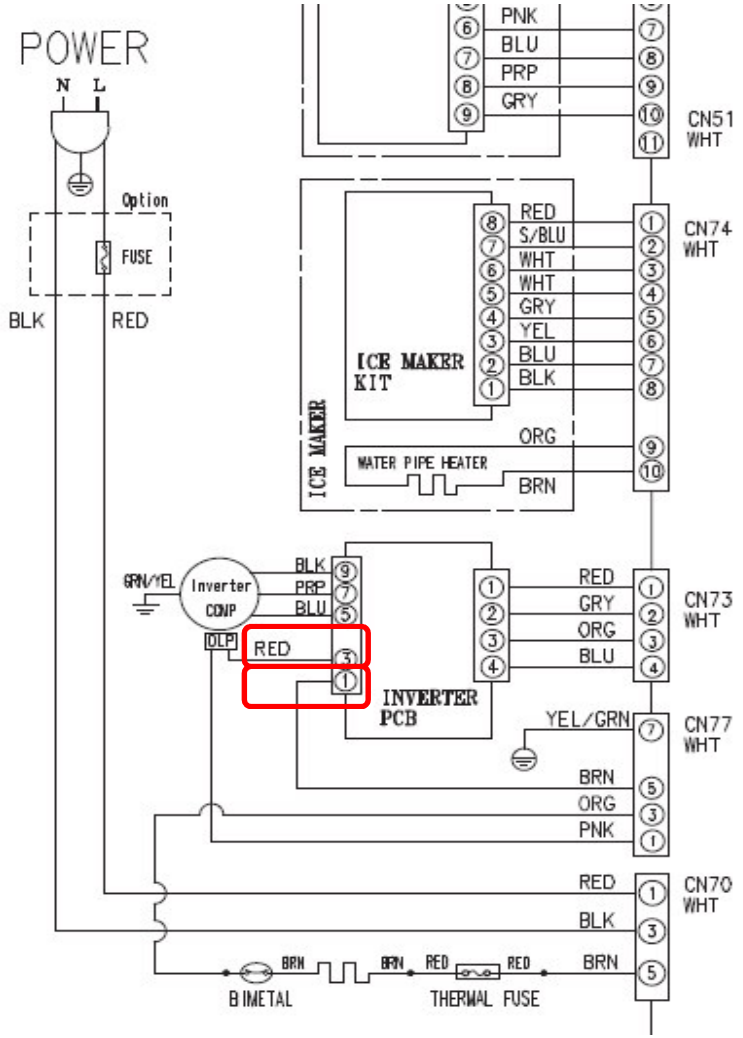

Daniel Enciso16008594중남미총괄|SVC OUTSOURCED10521038249 20150910221211
345801441941140

VERIFICACIÓN DE COMPONENTES

Compresor

Voltaje variable Vac, Frec variable, Res Ohm	Diagrama Eléctrico
	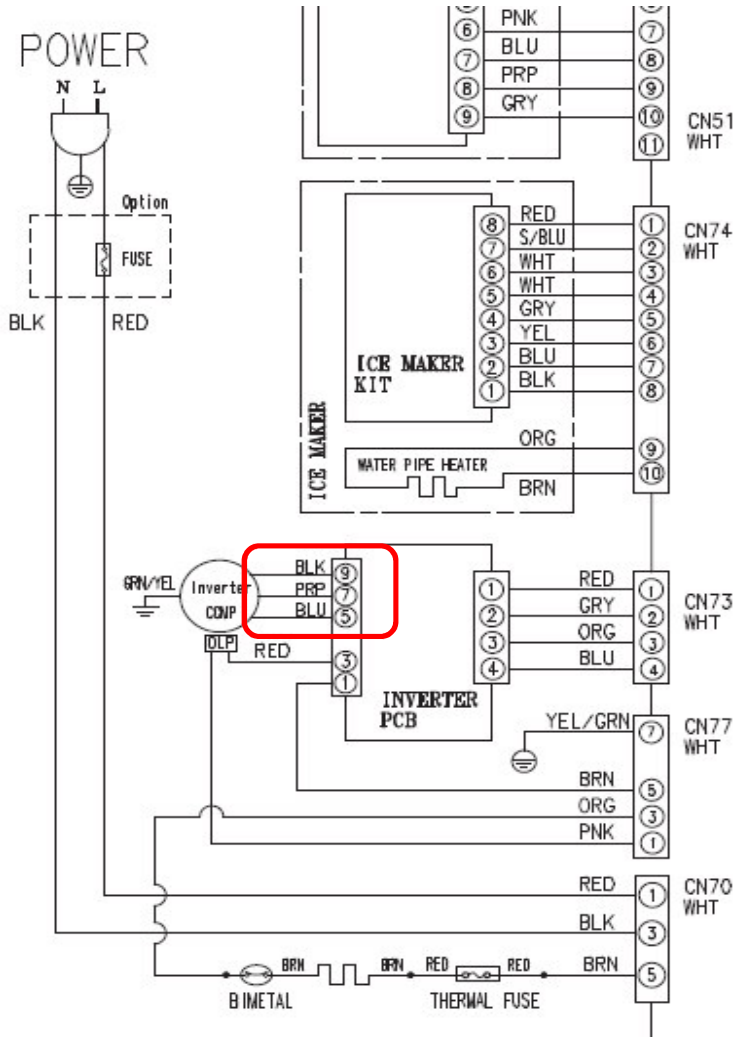

Daniel Enciso16008594중남미총괄|SVC OUTSOURCED10521038249 20150910221211

345801441941140

VERIFICACIÓN DE COMPONENTES

Comunicación Inverter PCB y PCB Main

V1= 5vdc v2= 2Vdc v3= 0.1 Vdc Aprx	Diagrama Eléctrico
	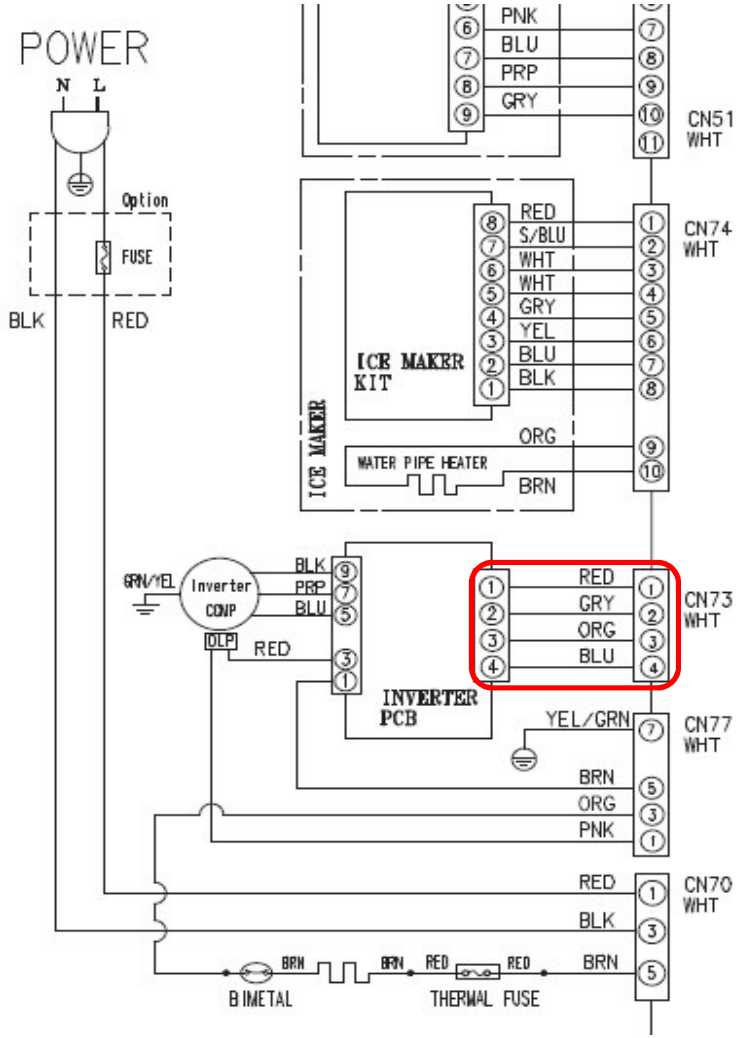

Daniel Enciso16008594중남미총괄|SVC OUTSOURCED10521038249 20150910221211
345801441941140

VERIFICACIÓN DE COMPONENTES

Ext - Sensor

Voltaje 1.7 Vdc, Resis 5.5 Kohm, Temp = 23°C	Diagrama Eléctrico
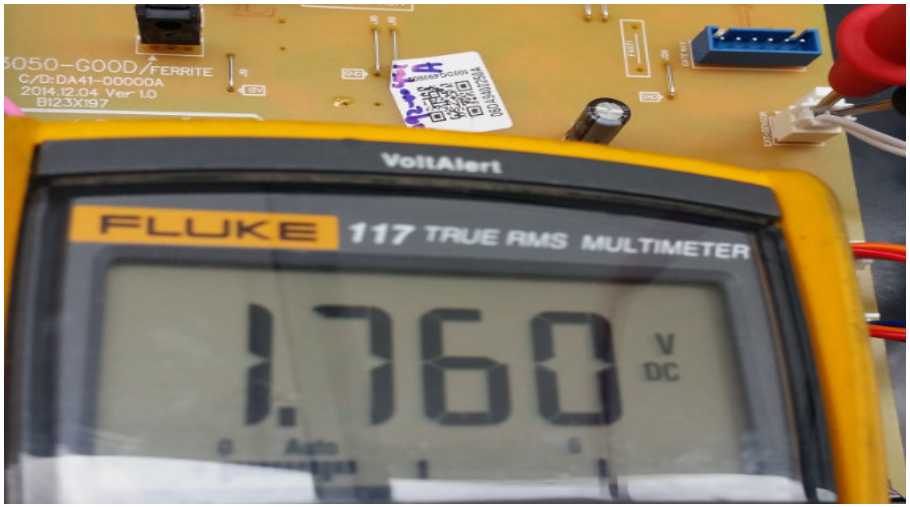 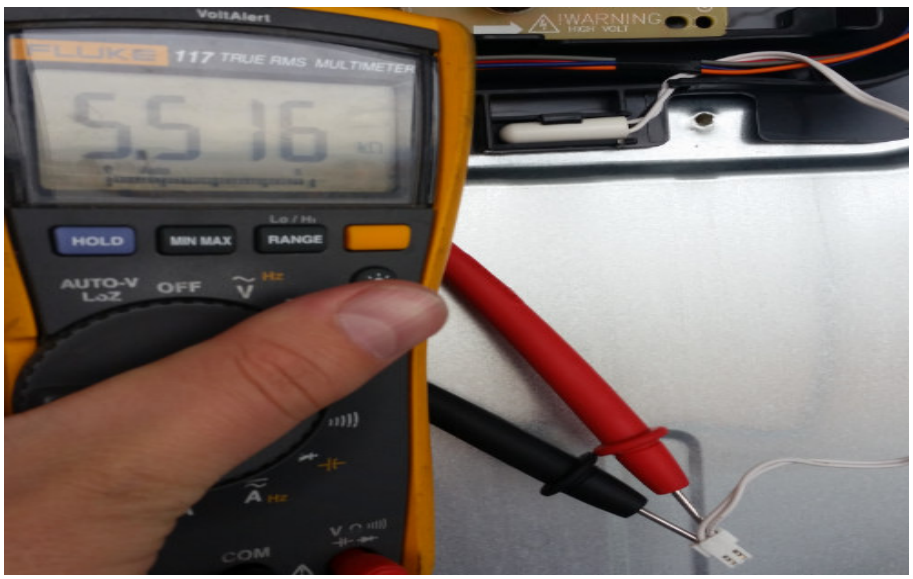	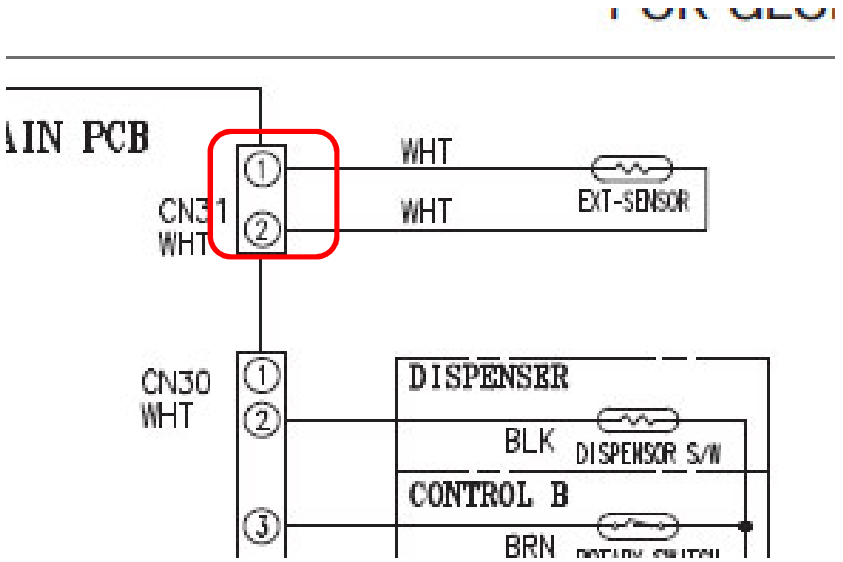

Daniel Enciso16008594중남미총괄|SVC OUTSOURCED10521038249 20150910221211

345801441941140

VERIFICACIÓN DE COMPONENTES

Defrost Sensor

Voltaje 3.2 Vdc , Temp = -7 °C	Diagrama Eléctrico
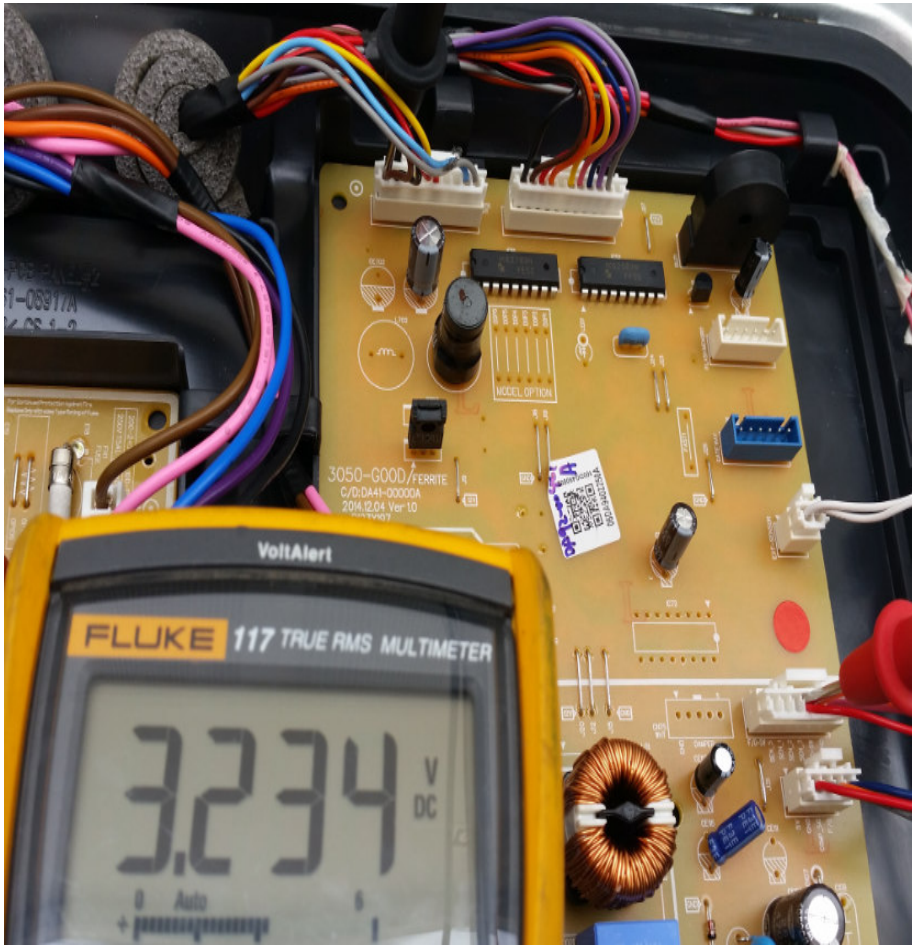	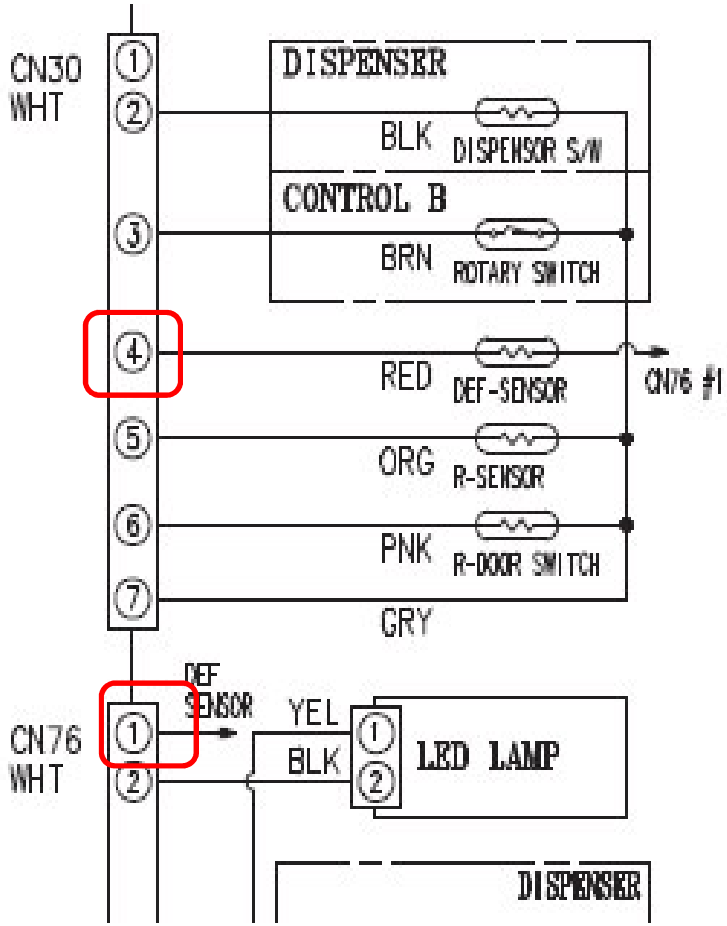

Daniel Enciso16008594중남미총괄|SVC OUTSOURCED10521038249 20150910221211
345801441941140

VERIFICACIÓN DE COMPONENTES

R Sensor

Voltaje 2.2 Vdc , Temp = 13 °C	Diagrama Eléctrico
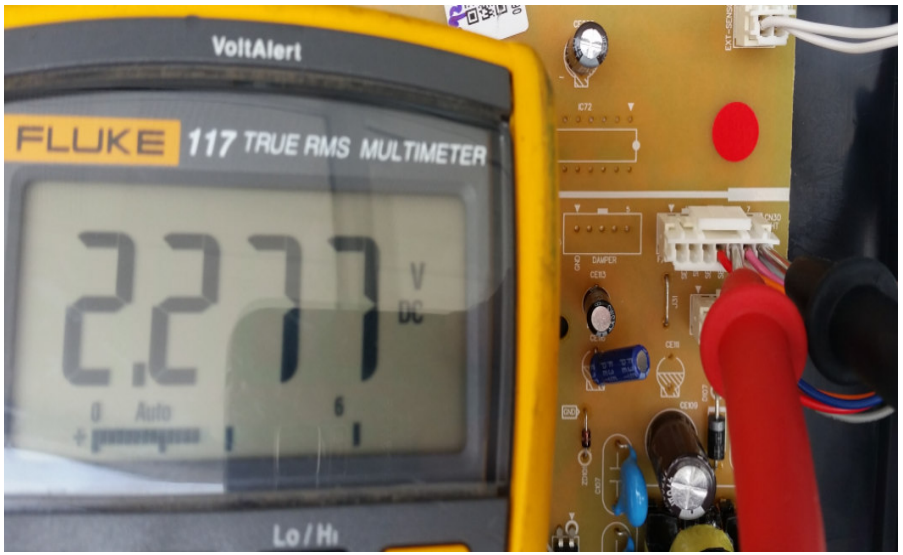	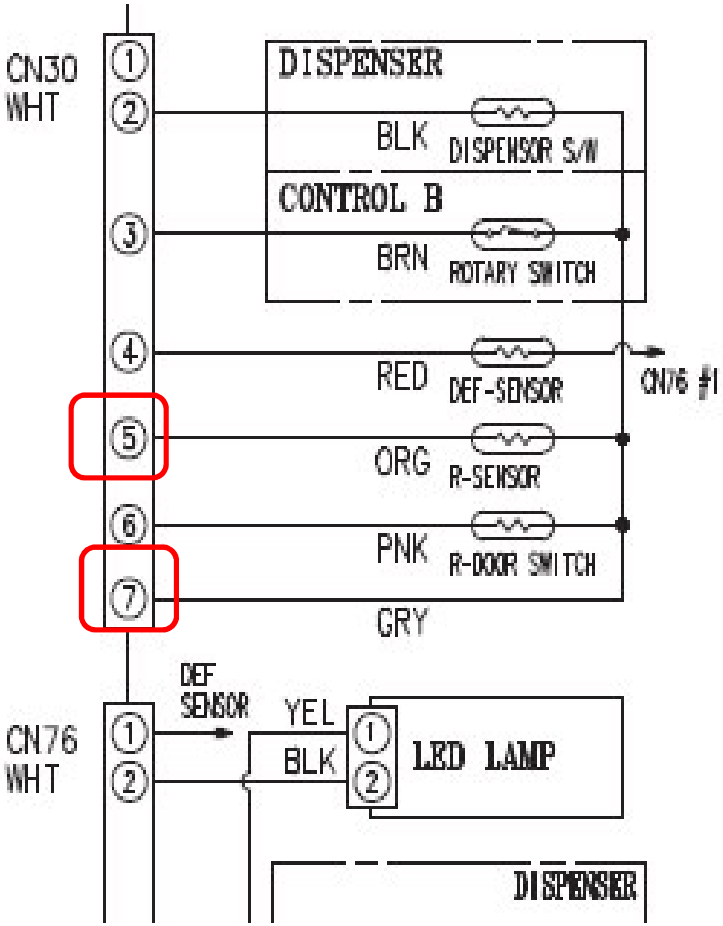

Daniel Enciso16008594중남미총괄|SVC OUTSOURCED10521038249 20150910221211
345801441941140

VERIFICACIÓN DE COMPONENTES

R-Door Switch

Voltaje 0 Vdc y 5 Vdc	Diagrama Eléctrico
   	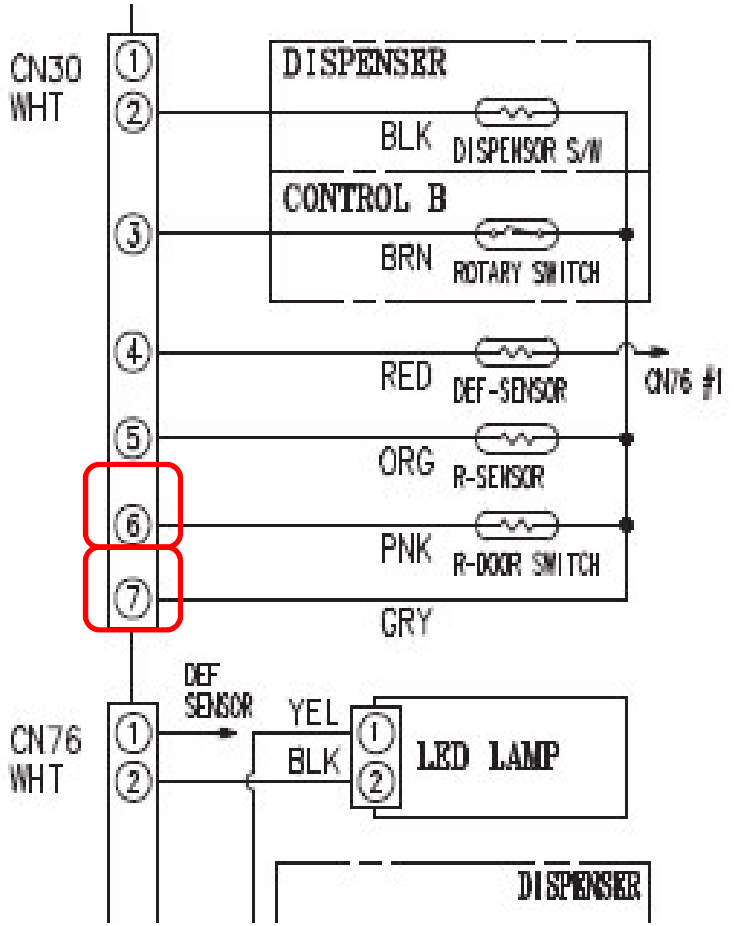

Daniel Enciso16008594중남미총괄|SVC OUTSOURCED10521038249 20150910221211

345801441941140

VERIFICACIÓN DE COMPONENTES

Led Lamp

Voltaje 0 Vdc y 12 Vdc	Diagrama Eléctrico
	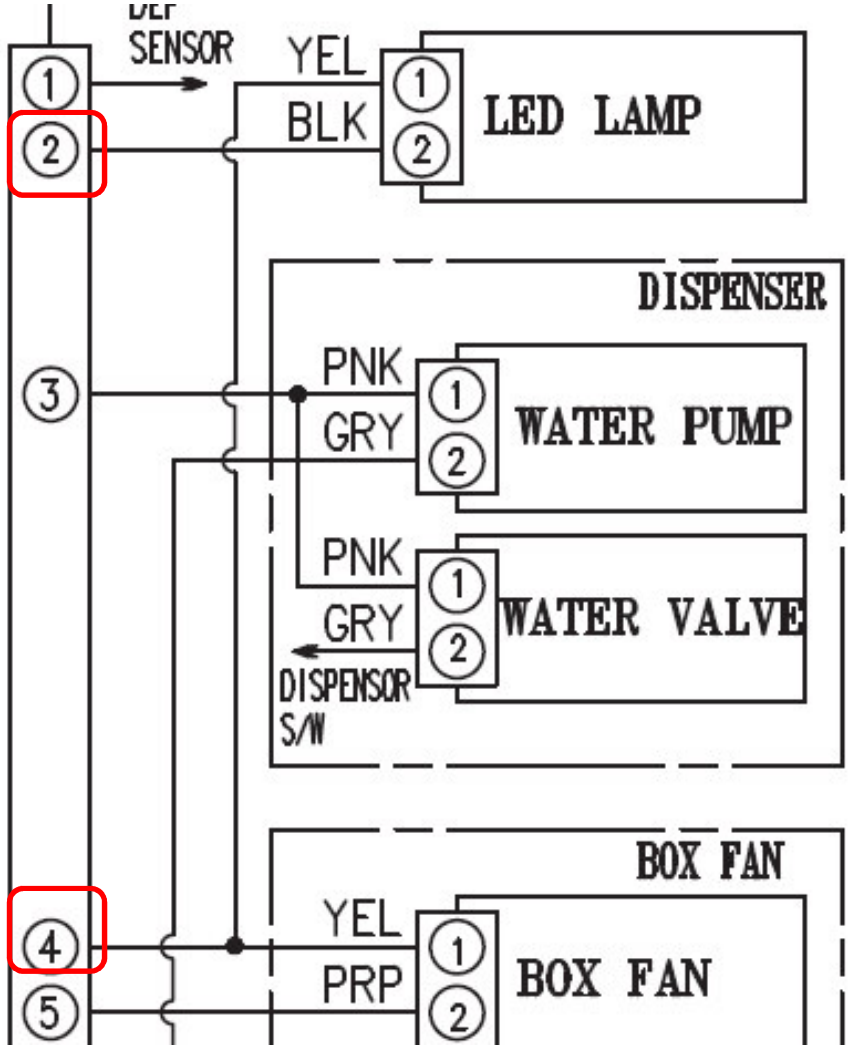

Daniel Enciso16008594중남미총괄|SVC OUTSOURCED10521038249 20150910221211
345801441941140

VERIFICACIÓN DE COMPONENTES

F-Fan

Voltaje 7.7 Vdc F/B 2.5 Vdc	Diagrama Eléctrico
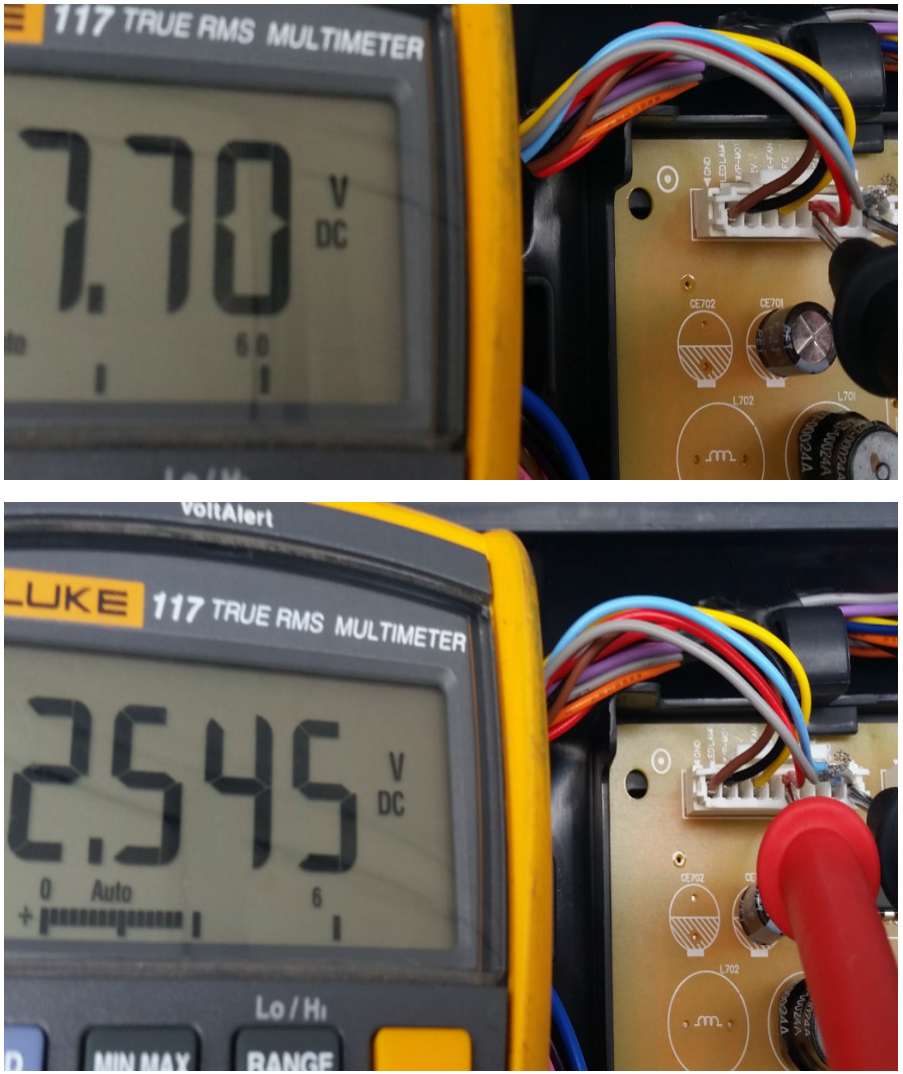	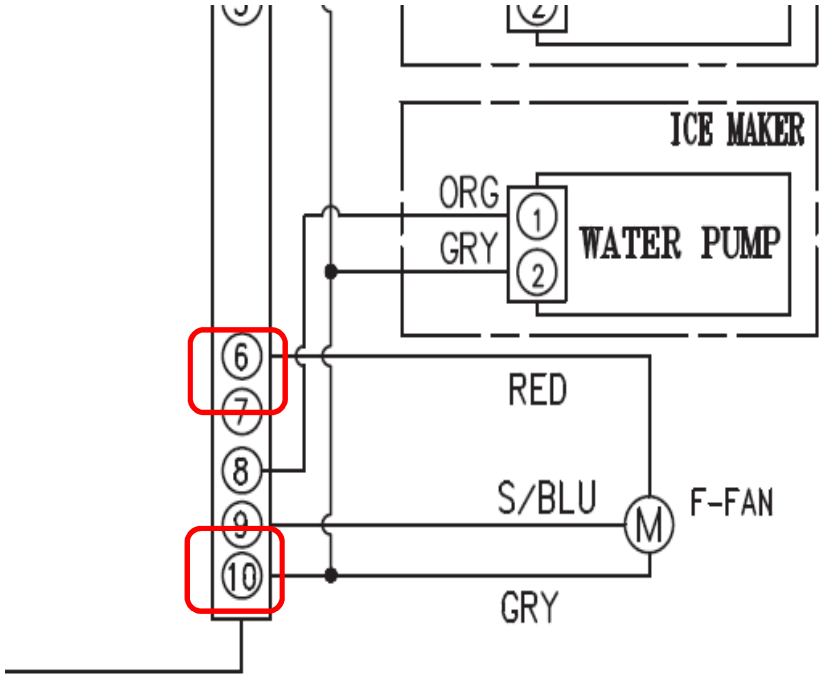

Daniel Enciso16008594중남미총괄|SVC OUTSOURCED10521038249 20150910221211
345801441941140

Thank you

- This Service Manual is a property of Samsung Electronics Co., Ltd.
Any unauthorized use of Manual can be punished under applicable
International or domestic law.

Daniel Enciso16008594중남미총괄|SVC OUTSOURCED10521038249 20150910221211

345801441941140