Westinghouse

USER MANUAL

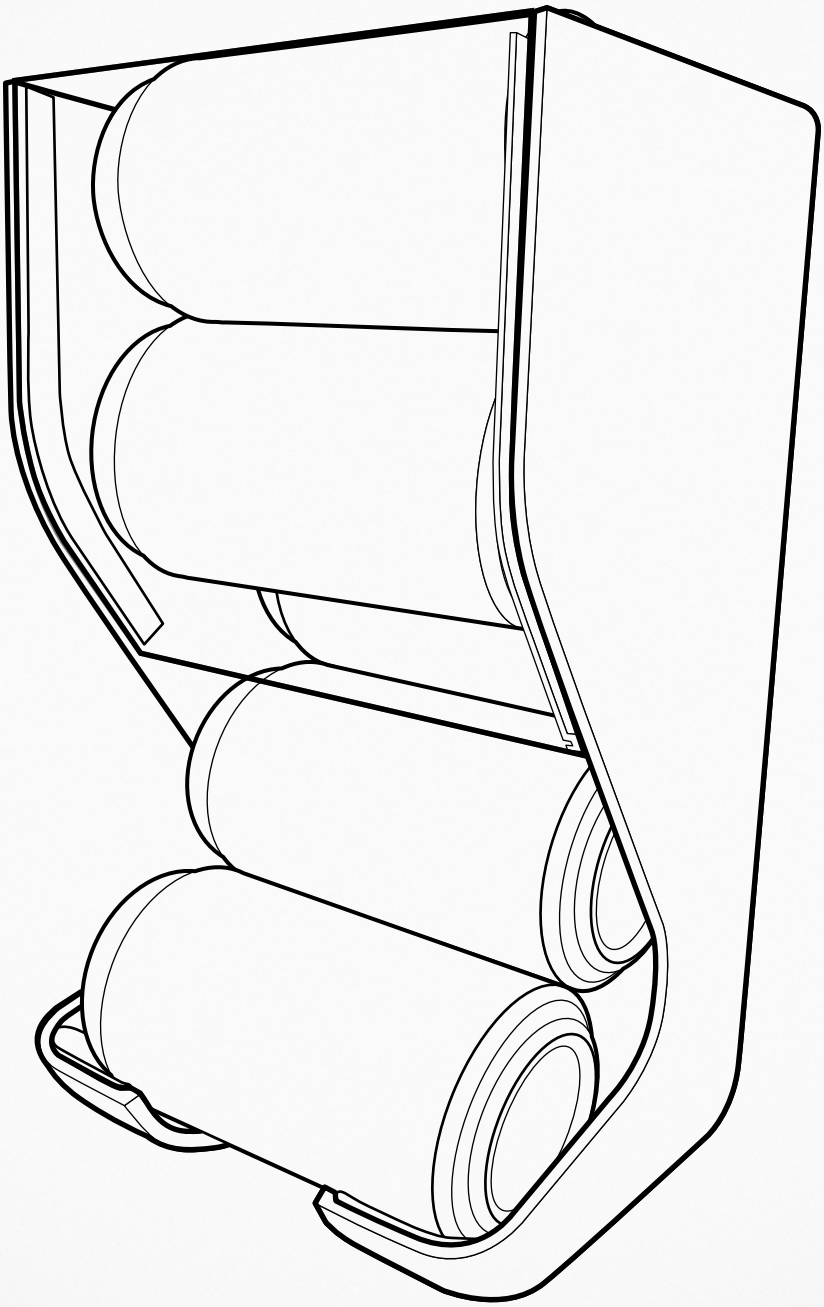

CAN DISPENSER

ACC082

GENERAL WARNINGS

Please read the user manual carefully and store in a handy place for later reference. Pass the user manual on to possible new owners of the appliance.

Read the following carefully to avoid damage or injury.

NOTE: You must read these warnings carefully before installing or using the accessory. If you need assistance, contact your Customer Care Department. The manufacturer will not accept liability, should these instructions or any other safety instructions incorporated in this book be ignored.

ENVIRONMENT

Remove and discard any packaging material before using this accessory. Most of the packaging materials are recyclable. Please dispose of those materials through your local recycling depot or by placing them in the appropriate collection containers.

WARNING

Risk of suffocation, injury or permanent disability.

- This accessory is not intended for use by persons (including children) with reduced physical, sensory or mental capabilities, or lack of experience and knowledge, unless they have been given supervision or instructions concerning the use of the appliance by a person responsible for their safety.
- This accessory may contain small parts that are a choking hazard. Not suitable for children under 3 years of age.

CAUTION

It is important to use your appliance safely. Check these safety points before using your appliance.

- Do not use or place the accessory near the edge of the table or counter, near hot gas, stove, electric burner or heated oven.
- This accessory is for indoor use only.
- Never use this can dispenser in the freezer compartment of the appliance.
- This accessory is intended for domestic use only. Electrolux will not accept any liability for possible damage caused by improper or incorrect use.
- When cleaning, use only a soft cloth with an unscented mild soap and lukewarm water.
- Never use hot water, solvents, commercial kitchen cleaners, aerosol cleaners, metal polishes, caustic or abrasive cleaners, or scourers to clean the accessory, as they may damage it. Many commercially available cleaning products and detergents contain solvents that will damage your accessory.

Installation

CAUTION

- The can dispenser only works on select refrigerators. Be sure to check the compatible appliance listed on the Westinghouse website: westinghouse.com.au or westinghouse.co.nz
- This product contains small parts and should not be used as a child's toy.

1. Position the Can Dispenser Hook onto the FlexStor Rail.
2. Ensure that the Dispenser Hook is securely engaged on the FlexStor Rail.

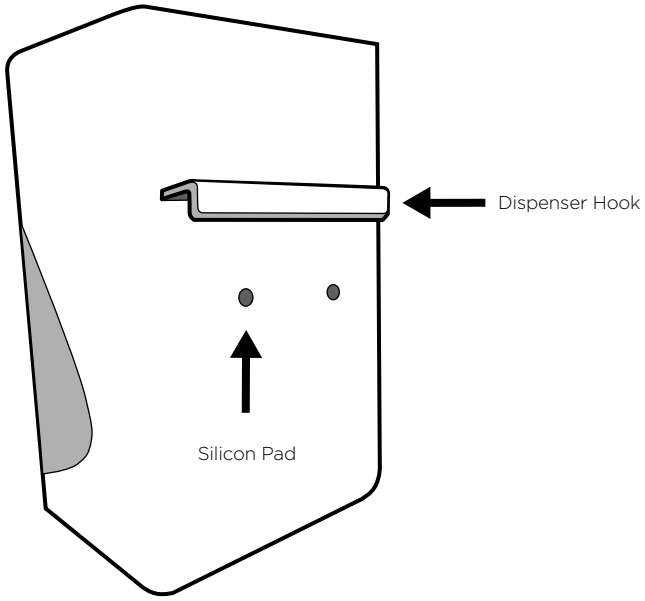

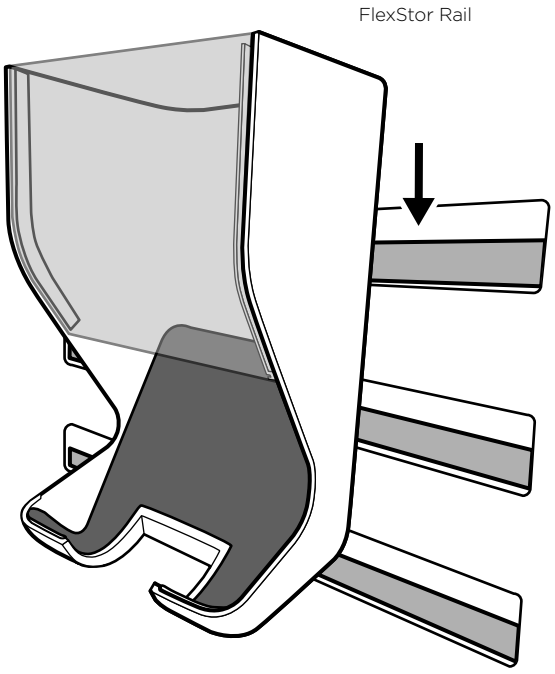

OPERATION

Operation

1. Load the first can from the front. (Do not drop the first can from the top, this may cause the can to land crooked or bounce out of the dispenser).

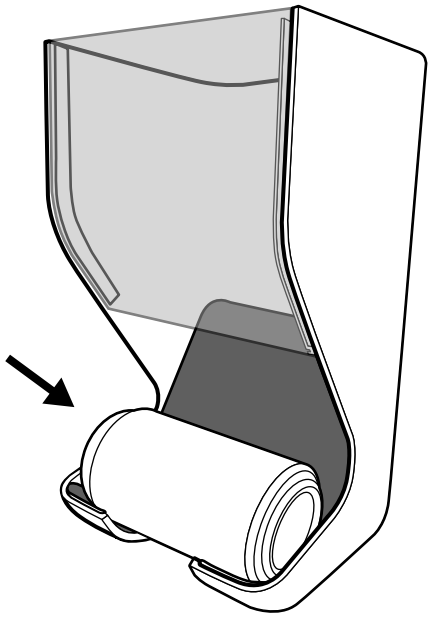

2. Load subsequent cans from the top ensuring that the cans are not dropped from a height greater than 15cm. (Dropping cans may damage dispenser and cause soft drink to fizz up).

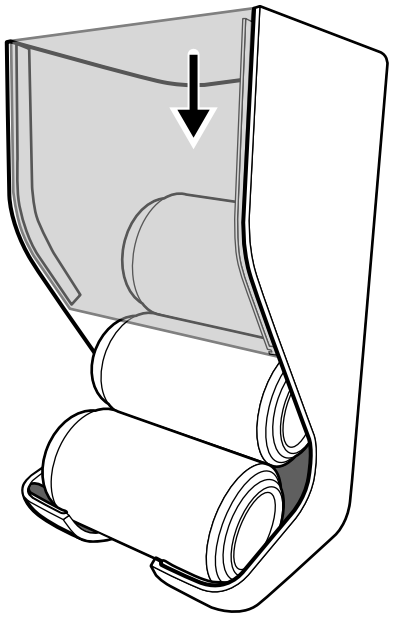

3. Do not continue loading cans if half of the can protrudes from the top of the dispenser.

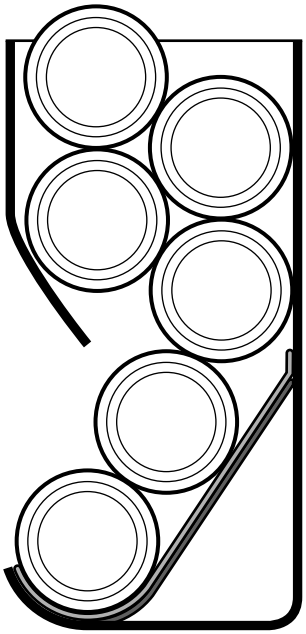

4. When removing cans pull the can up and towards yourself. Ensure that the can is not being pulled into the front lip of the dispenser.

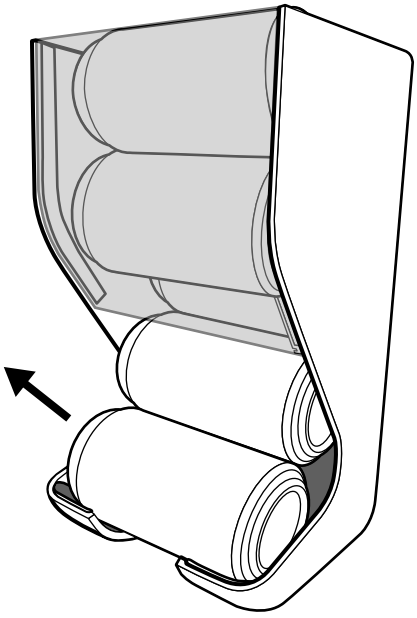

For more information on all Westinghouse appliances, or for dimension and installation information, call into your retailer, phone or email our customer care team or visit our website:

AUSTRALIA
phone: 1300 363 640
fax: 1800 350 067
email: customercare@electrolux.com.au
web: westinghouse.com.au

NEW ZEALAND
phone: 0800 436 245
fax: 0800 225 088
email: customercare@electrolux.co.nz
web: westinghouse.co.nz



TOP SERVICE
Top Service encompasses the after sales service provided by The Electrolux Group to consumers including delivery, home service and spare parts.

Westinghouse. We are part of the Electrolux family.
Share more of our thinking at electrolux.com.au

Important Notice

FOR SERVICE or to find the address of your nearest state service centre in Australia **PLEASE CALL 13 13 49** For the cost of a local call (Australia only)	**SERVICE AUSTRALIA** Electrolux ELECTROLUX HOME PRODUCTS electrolux.com.au	**FOR SPARE PARTS** or to find the address of your nearest state spare parts centre in Australia **PLEASE CALL 13 13 50** For the cost of a local call (Australia only)
FOR SERVICE or to find the address of your nearest authorised service centre in New Zealand **FREE CALL 0800 10 66 10** (New Zealand only)	**SERVICE NEW ZEALAND** Electrolux ELECTROLUX (NZ) Limited electrolux.co.nz	**FOR SPARE PARTS** or to find the address of your nearest state spare parts centre in New Zealand **FREE CALL 0800 10 66 20** (New Zealand only)

and WESTINGHOUSE are trademarks of Westinghouse Electric Corporation.
Used under license. All Rights Reserved.

© 2015 Electrolux Home Products Pty Ltd.

Part Number: A03645901
ABN 51 004 762 341
WMAN_CAN_MAR15