

OWNER'S GUIDE & SERVICE MANUAL

MARVEL UNDERCOUNTER REFRIGERATION



Model: MRRE215-IS31A

09/03/2026

CONTENTS

Contents

Welcome 3
Important Safety Instructions 4
Unpacking Your Appliance 5
Electrical 6
Cutout and Product Dimensions 7
Installing Your Appliance 9
Door Reversal 10
Integrated Panel Dimensions 12
Integrated Panel Installation 13
Using Your Electronic Control 14
Care and Cleaning 15
Replace Carbon Filter 15
Stainless Steel Maintenance 16
Energy Saving Tips 17
Extended Non-Use 18
Obtaining Service 19
Troubleshooting 20
Wire Diagram 22
Product Liability 23
Warranty Claims 24
Ordering Replacement Parts 25
R600a Specifications 26
Warranty 30

WELCOME

Welcome to Marvel

Thank you for choosing our quality product to add to your home. We are thrilled to welcome you to our growing community of Marvel owners, who trust in our products and our support.

The information in this guide is intended to help you install and maintain your new Marvel undercounter model to protect and prolong its lifetime. We encourage you to contact our Technical Support team at (616) 754-5601 with any questions.

Warranty

It is important you register your product warranty after taking delivery of your appliance. You can register online at marvelrefrigeration.com/warranty-registration.

The following information will be required when registering your appliance:
Serial Number
Date of Purchase
Dealer's name and address

Important Safety Instructions

Warnings and safety instructions appearing in this guide are not meant to cover all possible conditions and situations that may occur. Common sense, caution and care must be exercised when installing, maintaining or operating this appliance.

Recognize Safety Symbols, Words and Labels

⚠ WARNING

WARNING - You can be killed or seriously injured if you do not follow these instructions.

⚠ CAUTION

CAUTION - Hazards or unsafe practices which could result in personal injury or property/product damage.

NOTE

NOTE - Important information to help assure a problem-free installation and operation.

⚠ WARNING

State of California Proposition 65 Warning:
This product contains one or more chemicals known to the State of California to cause birth defects or other reproductive harm.

⚠ WARNING

State of California Proposition 65 Warning:
This product contains one or more chemicals known to the State of California to cause cancer.

⚠ WARNING

WARNING - This unit contains R600a (isobutane) which is a flammable hydrocarbon. It is safe for regular use. Do not use sharp objects to expedite defrosting. Do not damage refrigerant circuit.

UNPACKING YOUR APPLIANCE

⚠ WARNING

EXCESSIVE WEIGHT HAZARD

Use two or more people to move product.
Failure to do so can result in personal injury.

Remove Interior Packaging

Your appliance has been packed for shipment with all parts that could be damaged by movement securely fastened. Remove internal packing materials and any tape holding internal components in place. The getting started guide is shipped inside the product in a plastic bag along with the warranty registration card and other accessory items.

Important

Keep your carton and packaging until your appliance has been thoroughly inspected and found to be in good condition. If there is any damage, the packaging will be needed as proof of damage in transit. Afterwards, please dispose of all items responsibly.

⚠ WARNING

WARNING - Dispose of the plastic bags which can be a suffocation hazard.

Note to Customer

This merchandise was carefully packed and thoroughly inspected before leaving out facility. Responsibility for its safe delivery was assumed by the retailer upon acceptance of the shipment. Claims for loss or damage sustained in transit must be made to the retailer.

NOTE

DO NOT RETURN DAMAGED MERCHANDISE TO THE MANUFACTURER - FILE THE CLAIM WITH THE RETAILER.

⚠ CAUTION

Damages caused by ambient temperatures of 40°F (4°C) or below are not covered by the warranty.

⚠ CAUTION

If the appliance was shipped, handled or stored in other than an upright position for any period of time, allow the appliance to sit upright for a period of at least 24 hours before plugging in. This will assure oil returns to the compressor. Plugging the appliance in immediately may cause damage to internal parts.

⚠ WARNING

WARNING - Help Prevent Tragedies

Child entrapment and suffocation are not problems of the past. Junked or abandoned refrigerators are still dangerous, even if they sit outside for “just a few hours”.

If you are getting rid of your old refrigerator, please follow the instructions below to help prevent accidents.

Before you throw away your old refrigerator or freezer:

- Take off the doors or remove the drawers.
- Leave the shelves in place so children may not easily climb inside.

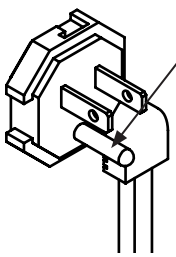

Electrical Connection

A grounded 115 volt, 15 amp dedicated circuit is required.

This product is factory equipped with a power supply cord that has a three-pronged, grounded plug. It must be plugged into a mating grounding type receptacle in accordance with the National Electrical Code and applicable local codes and ordinances. If the circuit does not have a grounding type receptacle, it is the responsibility and obligation of the customer to provide the proper power supply. The third-ground prong should not, under any circumstances, be cut or removed.

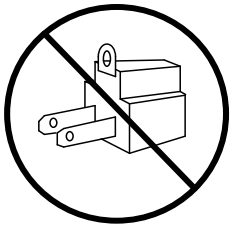

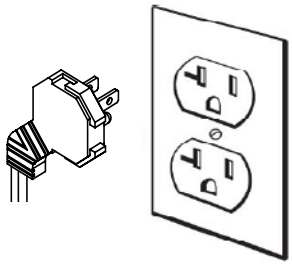

NOTE

Ground Fault Circuit Interrupters (GFCI) are prone to nuisance tripping which will cause the appliance to shut down. GFCI's are generally not used on circuits with power equipment that must run unattended for long periods of time, unles required to meet local building codes and ordinances.

⚠ WARNING

Electrical Shock Hazard

- Do not use an extension cord with this appliance. They can be hazardous and can degrade product performance.
- This appliance should not, under any
- circumstances, be installed to an un-grounded
- electrical supply. Do not remove the grounding prong from the power cord.
- Do not use an adapter.
- Do not splash or spray water from a hose on the appliance. Doing so may cause an electrical shock, which may result in severe injury or death.

CUTOUT AND PRODUCT DIMENSIONS

ROUGH-IN OPENING DIMENSIONS			CABINET DIMENSIONS					
"A"	"B"	"C"	"D"	"E"	"F"	"G"	"H"	"I"
15 ⅞" (40.3 cm)	34" to 35" (86.4 cm to 88.9 cm)	24" (61 cm)	15" (38.1 cm)	33 ⅞" to 34 ⅞" (86 cm to 88.6 cm)	22 9⁄16" (57.3 cm)	22 ¼" (56.5 cm)	36 ½" (92.7 cm)	15 1⁄16" (38.3 cm)

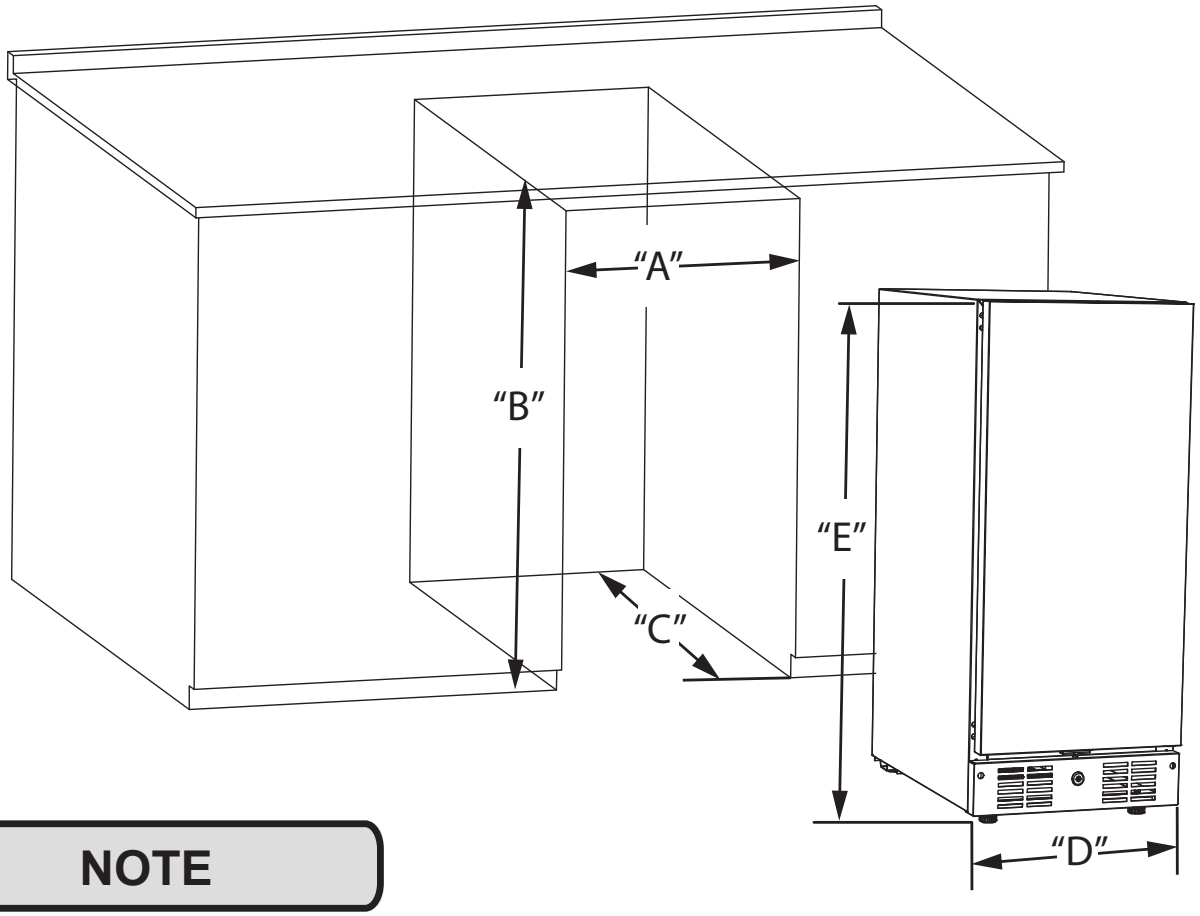

NOTE

The cutout shown above includes an extra ⅝" to the opening width ("A") to allow for proper clearance with surrounding cabinetry when a ¾" panel is installed.

If necessary, to gain clearance inside the rough-in opening, a hole can be cut through the adjacent cabinet and the power cord routed through this hole to a power outlet. Another way to increase the available opening depth is to recess the power outlet into the rear wall to gain the thickness of the power cord plug. Not all recessed outlet boxes will work for this application as they are too narrow, but a recessed outlet box equivalent to Arlington #DVFR1W is recommended for this application.



CUTOUT AND PRODUCT DIMENSIONS

PRODUCT DATA	
ELECTRICAL REQUITEMENTS #	**PRODUCT WEIGHT**
115V/60Hz/15A	105 lbs (47.6 kg)

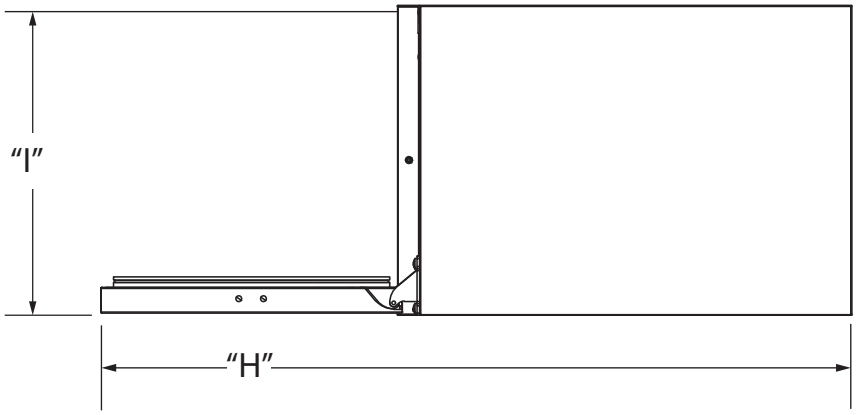

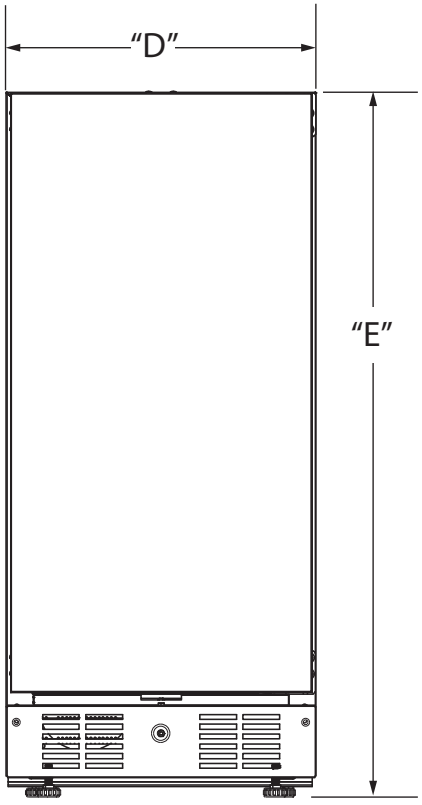

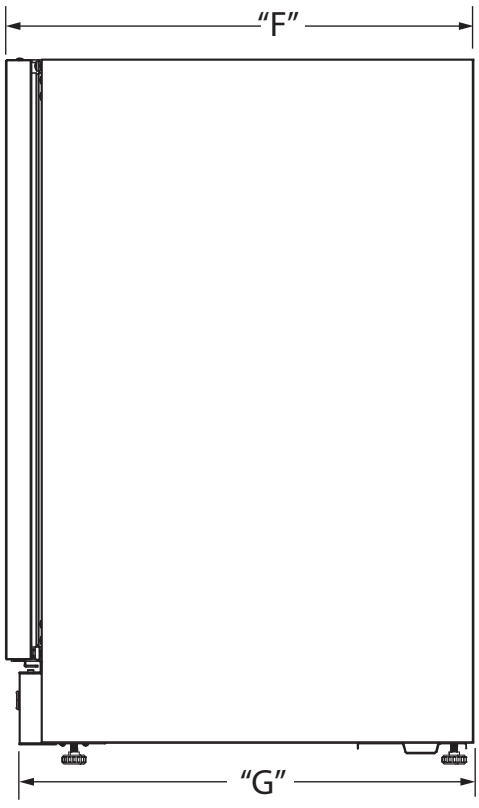

Minimum rough-in opening is required to be larger than the adjusted height of the cabinet.

A grounded 15-amp dedication circuit us required. Follow all local building codes when installing electrical and appliance.

Select Location

The proper location will ensure peak performance of your appliance. We recommend a location where the unit will be out of direct sunlight and away from heat sources. To ensure your product performs to specifications, the recommended installation location temperature range is from 55 to 100°F (13 to 38°C).

Cabinet Clearance

Ventilation is required from the bottom front of the appliance. Keep this area open and clear of any obstructions. Adjacent cabinets and counter top can be installed around the appliance as long as the front grille remains unobstructed.

Front Grille

Do not obstruct the front grille. The openings within the front grille allow air to flow through the condenser heat exchanger. Restrictions to this air flow will result in increased energy usage and loss of cooling capacity. For this reason it is important this area to not be obstructed and the grille openings kept clean. Marvel does not recommend the use of a custom made grille as air flow may be restricted.

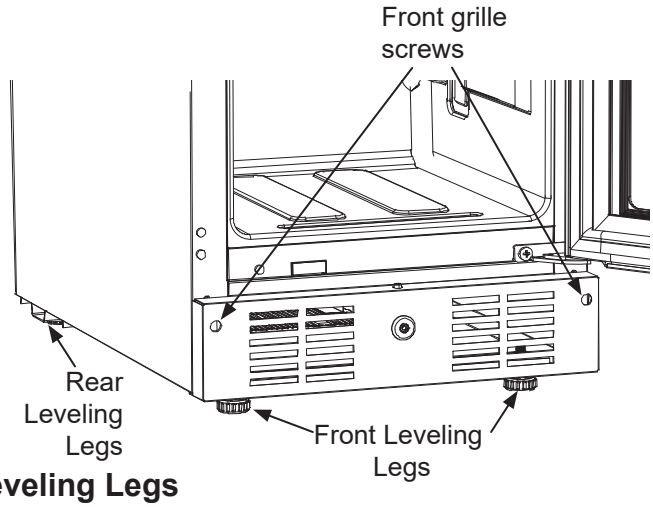

Leveling Legs

Adjustable legs at the front and rear corners of the appliance should be set so the unit is firmly positioned on the floor and level from side to side and front to back. The overall height of your Marvel appliance may be adjusted higher (by turning the leveling leg out, CCW) and lower (by turning the leveling leg in, CW).

To adjust the leveling legs, place the appliance on a solid surface and protect the floor beneath the legs to avoid scratching the floor. With the assistance of another person, lean the appliance back to access the front leveling legs. Raise or lower the legs to the required dimension by turning the legs. Repeat this process for the rear by tilting the appliance forward using caution. On a level surface check the appliance for levelness and adjust accordingly.

DOOR REVERSAL

Door Reversing Instructions

1. Remove grille by taking out 2 screws in front, accessible through holes and 3 screws on the bottom of the grille.

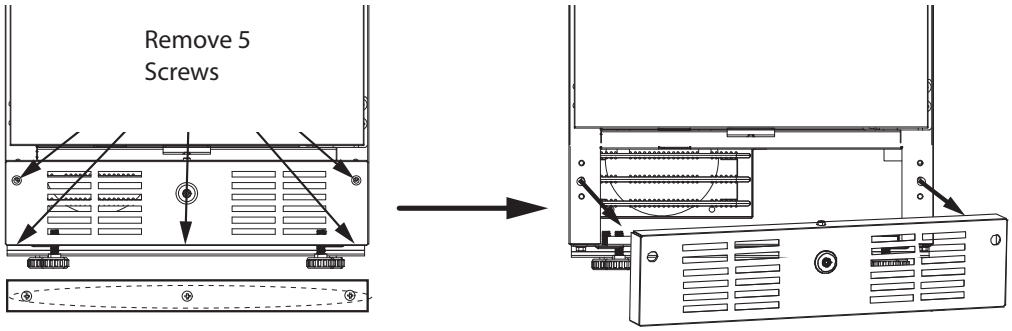

2. Open the door
3. While holding the door, securely remove the 3 screws from the lower hinge.
4. Once the lower hinge is removed, the door will drop out of the upper hinge pin and be off of the cabinet.
5. Lay the door in a secure place.
6. Remove upper hinge by removing the 3 screws.

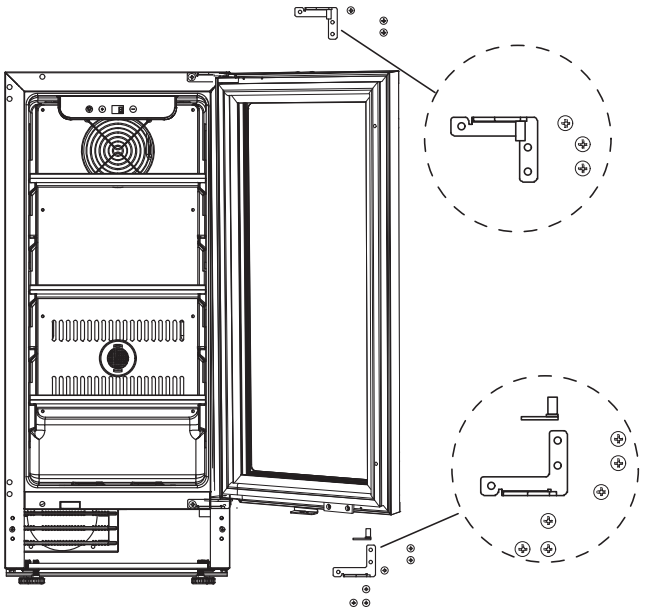

7. Locate the lefthand hinges in the literature packet that was included with your product.
8. From the left side, remove all 6 of the gray hole plugs from the screw holes of the upper and lower hinges.
9. Place the hole plugs in the screw holes on the right side where the hinges were removed.

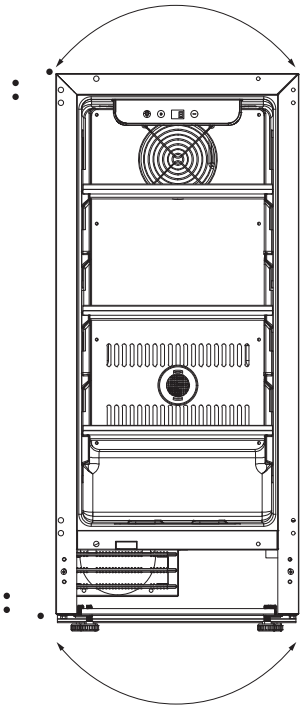

DOOR REVERSAL

10. Remove the door magnet by removing the 2 screws
11. Once removed, place the magnet on the opposite end of the door.
12. Install using the 2 screws
13. The door is now ready to be rotated 180°.

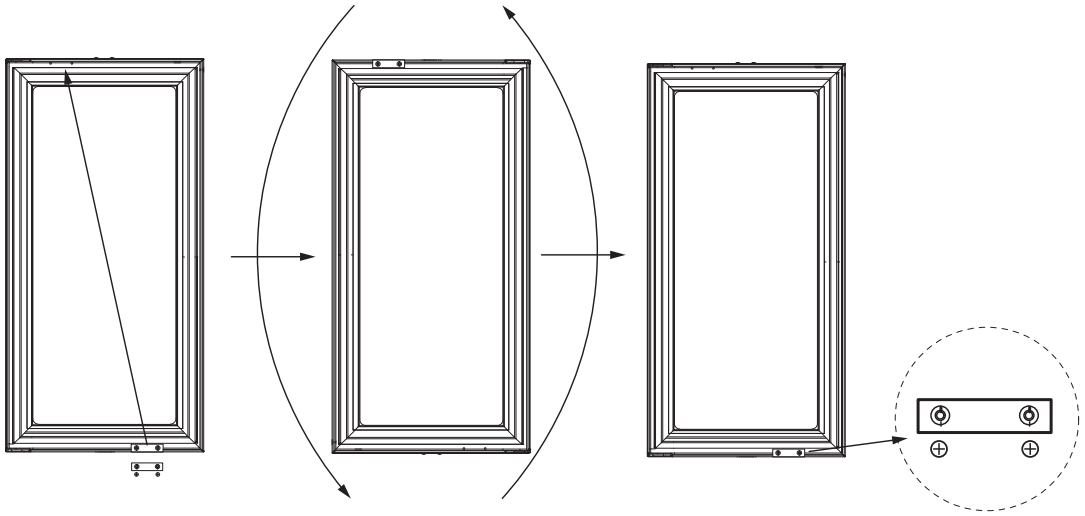

14. Install the upper hinge with 3 screws.
15. With the door turned to its new position, hold the door upward to the upper hinge.
16. Place the lower hinge on the bottom of the door.
17. Attach the lower hinge with 3 screws.
18. Install grille (see Step No. 1).
19. Door reversal is now complete.

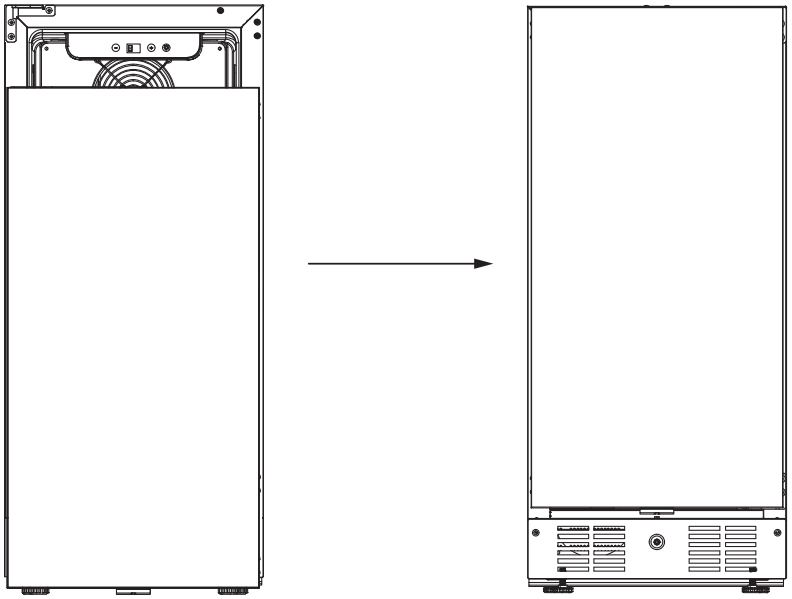

Integrated Panel Dimensions

NOTE

Due to differences in surrounding cabinetry the panel may not perfectly align with door. The procedure below is designed to provide a finished integrated panel that seamlessly integrates with surrounding cabinetry.

Panel Preparation

Panel thickness should be at least 5/8” and no more than 3/4”
Total weight of the door should not exceed 20 lbs.

1. Cut the panel to the dimensions listed below.
2. Optional: Stain or finish panel to desired stain or color. Be sure to closely follow the instructions provided by the manufacturer.
3. Optional: Install handles and hardware.

NOTE

When applying an integrated panel to a unit, ensure that all surfaces are finished in order to prevent warping. In some situations, the panel/frame may be visible through the glass while the door is open.

NOTE

If using a 3/4” panel, it is necessary to add 5/8” to the opening width (“A”) to allow for proper clearance with surrounding cabinetry or wall.

5/8” may not be required for Partial Overlay cabinet styles (A) but is required for Full Overlay (B) and Inset style (C) cabinets.

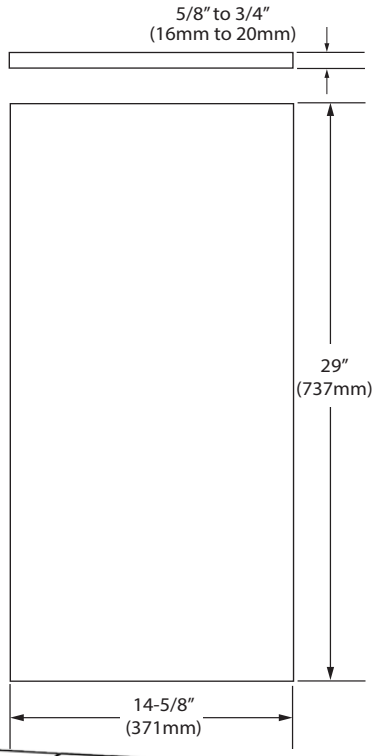

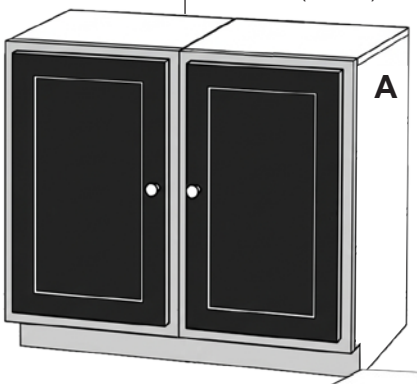

Doors sit on top of the cabinet frame but leave some of the frame visible.

Doors almost completely cover the cabinet face frame, creating a seamless look.

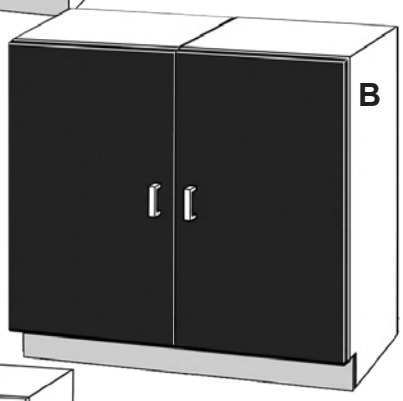

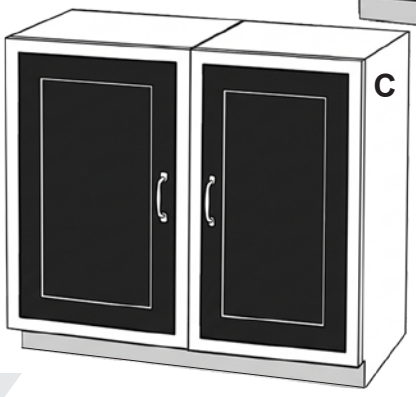

Doors are set inside the cabinet frame, sitting flush with the face.

Panel Installation

NOTE

If you do not have assistance, you may wish to remove the door completely - for door removal, refer to the door reversal instructions found in the main owner's guide.

1. Starting at corner, pull gasket away from door and completely remove.

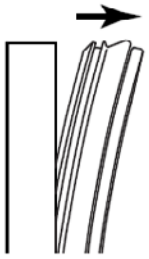

2. Upon removal, lay gasket down on a flat surface.

3. Align the panel with the outside edge (opposite the hinge) and high enough to align with the highest point in the door.

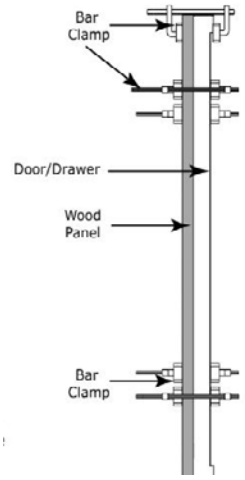

4. Secure integrated panel to door using clamps. A robust tape may also be used. Marvel recommends the use of bar clamps to secure the panel to the door. If using tape, be certain the tape will not damage panel finish upon removal.

5. Locate within the gasket channel 8 pre-drilled holes (3 on each side, 1 on top, 1 on bottom).

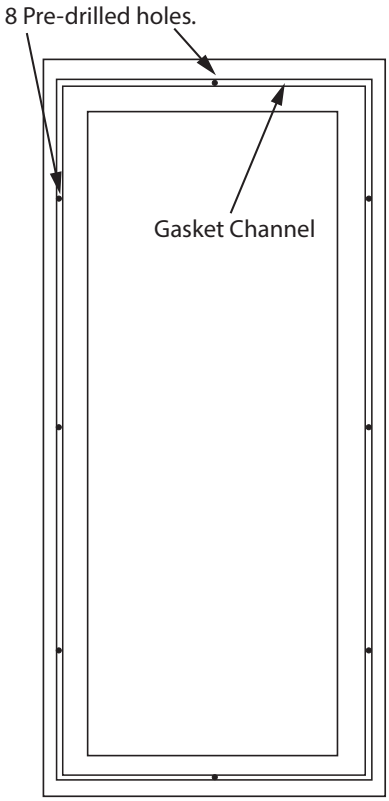

6. Using a 7⁄64" drill bit, drill 8 pilot holes into the wood panel ½" deep using the holes in the door frame as a guide.

NOTE

It is important to ensure that all drilled holes are drilled to the correct depth in order to avoid spills in the wood when hardwood is installed.

7. Using a Phillips screwdriver, place one screw into each of the 8 pilot holes and screw down. Do not overtighten screws.

8. Remove clamps from door.

9. Starting at the corners, reinstall the gasket into the gasket channel in the frame. Make sure the gasket is fully seated. This may take some force.

10. Reinstall door.

Control Operation

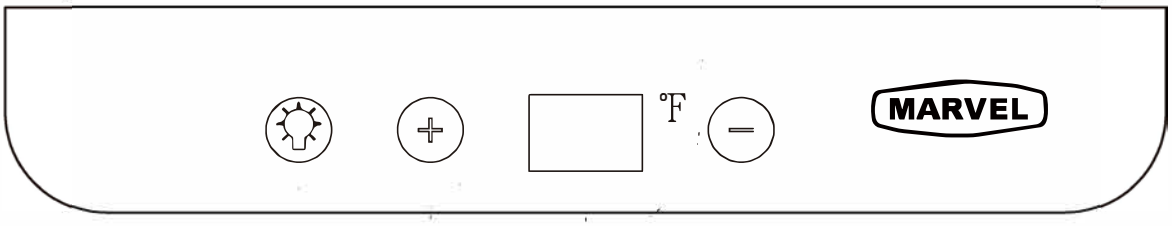

CONTROL FUNCTION GUIDE

FUNCTION	COMMAND	NOTES
Adjust Temperature	Press the + or − buttons.	Set a temperature from 34°F-61°F.
Adjust Interior Light Color	Press the button to toggle interior lighting color.	Toggle between bright white, warm white, cool white, light blue, blue, and teal interior LED lighting.
Interior Light Remain On	Press and hold the button until interior lighting flashes 3 times. This enables interior lighting to remain on when door is closed.	Interior light remains on until procedure is repeated.
Start Sabbath Mode	Press and hold the + and − buttons for 3 seconds to enable Sabbath mode.	All lights and display turn off, but cooling continues.
End Sabbath Mode	Press and hold the + and − buttons for 3 seconds to end Sabbath mode.	Machine returns to standard operation.

Front Grille
Be sure that nothing obstructs the required air flow openings in front of the cabinet. At least once or twice a year, brush or vacuum lint and dirt from the front grille area.

⚠ CAUTION

SHOCK HAZARD: Disconnect electrical power from the appliance before cleaning with soap and water.

Cabinet
The painted cabinet can be washed with either a mild soap and water and thoroughly rinsed with clear water. NEVER use abrasive scouring cleaners.

Interior
Wash interior compartment with mild soap and water. Do NOT use an abrasive cleaner, solvent, polish cleaner or undiluted detergent.

Care of Appliance
1. Avoid leaning on the door, you may bend the door hinges or tip the appliance.
2. Exercise caution when sweeping, vacuuming or mopping near the front of the appliance. Damage to the grille can occur.
3. Periodically clean the interior of the appliance as needed.
4. Periodically check and/or clean the front grille as needed.

In the Event of a Power Failure
If a power failure occurs, try to correct it as soon as possible. Minimize the number of door openings while the power is off so as not to adversely affect the appliance's temperature.

Light assembly replacement
All models use LED lamps to illuminate the interior of the appliance. This component is very reliable, but should one fail, contact a qualified service technician for replacement of the LED.

Replace Carbon Filter

NOTE

The carbon filter should be changed every 6 months.

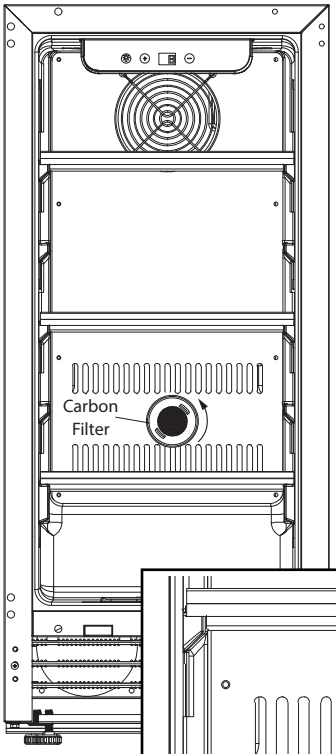

Carbon filters may be ordered online at marvelrefrigeration.com. Enter part # 90-54223-15.

To remove carbon filter, rotate to the left until tabs are verticle, then pull filter out towards you. To install, line up tabs with slots in evaporator cover, push in slightly and rotate filter to the right until it stops.

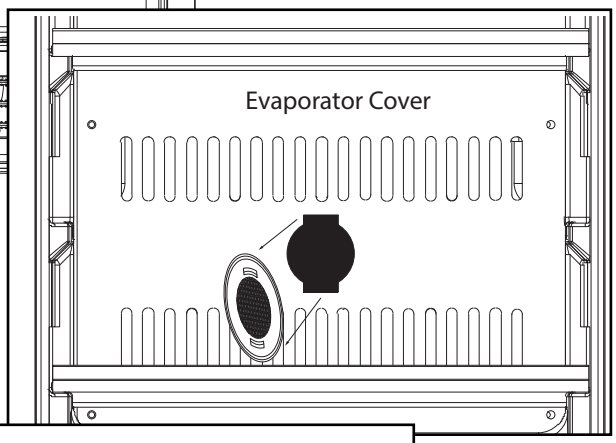

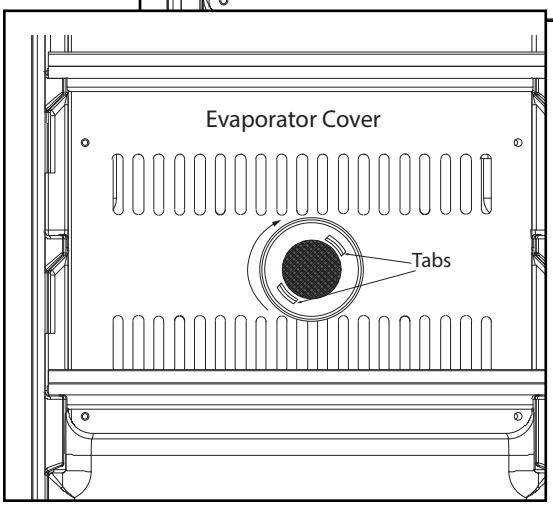

STAINLESS STEEL MAINTENANCE

Background

Stainless steel does not stain, corrode, or rust as easily as ordinary steel, but it is not stain or corrosion proof. Stainless steels can discolor or corrode if not maintained properly.

Stainless steels differ from ordinary carbon steels by the amount of chromium present. It is this chromium that provides an invisible protective film on the surface called chrome-oxide. This protective chrome-oxide film on the surface can be damaged or contaminated, which may result in discoloration, staining, or corrosion of the base metal.

Care & Cleaning

Routine cleaning of the stainless steel surfaces will serve to greatly extend the life of your product by removing contaminants. This is especially important in coastal areas which can expose the stainless to severe contaminants such as halide salts, (sodium chloride).

It is strongly recommended to periodically inspect and thoroughly clean crevices, weld points, under gaskets, rivets, bolt heads, and any locations where small amounts of liquid could collect, become stagnant, and concentrate contaminates. Additionally, any mounting hardware that is showing signs of corrosion should be replaced.

Frequency of cleaning will depend upon the installation location, environmental, and usage conditions.

Choosing a Cleaning Product

The choice of a proper cleaning product is ultimately that of the consumer, and there are many products from which to choose. Depending upon the type of cleaning and the degree of contamination, some products are better than others.

Typically the most effective and efficient means for routine cleaning of most stainless steel products is to give the surfaces a brisk rubbing with a soft cloth soaked in warm water and a gentle detergent, or mild mixture of ammonia. Rubbing should, to the extent possible, follow the polish lines of the steel, and always insure thorough rinsing after cleaning.

Although some products are called "stainless steel cleaners," some may contain abrasives which could scratch the surface, (compromising the protective chrome-oxide film), and some many contain chlorine bleach which will dull, tarnish or discolor the surface if not completely removed.

After the stainless surfaces have been thoroughly cleaned, a good quality car wax may be applied to help maintain the finish.

Stainless steel products should never be installed, or stored in close proximity to chlorine chemicals.

Whichever cleaning product you chose, it should be used in strict accordance with the instructions of the cleaner manufacturer.

ENERGY SAVING TIPS

The following suggestions will minimize the cost of operating your refrigeration appliance.

1. Do not install your appliance next to a hot appliance (cooker, dishwasher, etc.), heating air duct, or other heat sources.
2. Install product out of direct sunlight.
3. Ensure the front grille vents at front of appliance beneath door are not obstructed and kept clean to allow ventilation for the refrigeration system to expel heat.
4. Plug your appliance into a dedicated power circuit. (Not shared with other appliances).
5. When initially loading your new product, or whenever large quantities of warm contents are placed within refrigerated storage compartment, minimize door openings for the next 12 hours to allow contents to pull down to compartment set temperature.
6. Maintaining a relatively full storage compartment will require less appliance run time than an empty compartment.
7. Ensure door closing is not obstructed by contents stored in your appliance.
8. Allow hot items to reach room temperature before placing in product.
9. Minimize door openings and duration of door openings.
10. Use the warmest temperature control set temperature that meets your personal preference and provides the proper storage for your stored contents.
11. When on vacation or away from home for extended periods, set the appliance to warmest acceptable temperature for the stored contents.
12. Set the control to the “off” position if cleaning the appliance requires the door to be open for an extended period of time.

Outdoor Product Long-Term Storage / Winterization:

1. Time to Winterize, when the daily low ambient
2. temperature is at or below 38°F (3.3°C).

⚠ CAUTION

Operation of the unit at ambient temperatures below the recommended Winterization temperature will void your warranty.

3. Unplug the unit from the power outlet
4. It is also recommended that the power to the outlet be turned-off if the circuit is not required for other items during the Winter season.
5. Remove all contents.
6. If necessary, move the unit so you can gain access to the rear of the product.
7. When cleaning unit pay particular attention to any cracks and crevices that may have accumulated dirt and debris.
8. Remove the front toe-grille, and use a brush and vacuum to clean dirt and debris from beneath the unit.
9. Thoroughly clean the toe-grille and re-install on the unit.
10. Remove the rear access cover, and use a brush and vacuum to clean dirt and debris from the machine compartment.
    - If the plastic defrost drain pan located under the compressor contains water, use a sponge to remove as much water as possible.
11. Thoroughly clean the rear access cover and re-install on the unit.
12. Wipe down all interior surfaces with anti-bacterial cleaner to be followed with clean rinse water to remove any residual chemicals which could cause staining. Do not use any abrasive cleaners or scouring pads.
13. Leave the door open and allow to completely dry out before closing the door.
14. Thoroughly clean the door gasket with anti-bacterial cleaner to be followed with clean rinse water to remove any residual chemicals.
15. Thoroughly clean the exterior with a cleaner approved for stainless steel. Do not use any abrasive cleaners or scouring pads. See "Stainless Steel Maintenance".
16. Any mounting hardware / fasteners that are showing signs of corrosion should be replaced.
17. Once the exterior has been thoroughly cleaned, you may want to apply a coating of car wax to help protect against spotting from moisture, dirt, and debris that may accumulate on the surfaces during the Winterization period.
18. Do not place a cover on the unit, as this can trap condensation.

After completion of these steps, you may choose to store the unit indoors, although this is not required.

Start-Up After Long-Term Storage:

1. If stored outside, it is recommended that the unit again be thoroughly inspected per the storage instructions above to address any dirt or debris from the weather and/or animals/insects.
2. Connect the unit to electrical power.
3. Turn unit on and confirm your desired control settings.
4. Allow 24-hrs for the unit to stabilize before loading contents.

OBTAINING SERVICE

If Service is Required:

- If the product is within the second year warranty period, please go to marvelrefrigeration.com/request-productservice or call Marvel Customer Service at 616.754.5601 for directions on how to obtain warrantycoverage in your area.
- If the product is outside the second year warranty period, Marvel Customer Service can provide recommendations of service centers in your area.
- In all correspondence regarding service, be sure to give the serial number and proof of purchase.
- Try to have information or description of nature of the problem, how long the appliance has been running, the room temperature, and any additional information that may be helpful in quickly solving the problem.

Before Calling for Service

If you think your product is malfunctioning, read the Control Operation section to clearly understand the function of the control.

If the problem persists, read the Normal Operating Sounds and Troubleshooting Guide sections below to help you quickly identify common problems and possible causes and remedies. Most often, this will resolve the problem without the need to call for service.

If Service is Required

If you do not understand a troubleshooting remedy, or your product needs service, contact Marvel directly at 616.754.5601.

When you call, you will need your product Model and Serial Numbers. This information appears on the Model and Serial number plate of your product.

Normal Operating Sounds

All models incorporate rigid foam insulated cabinets to provide high thermal efficiency and maximum sound reduction for its internal working components. Despite this technology, your model may make sounds that are unfamiliar.

Normal operating sounds may be more noticeable because of the unit's environment. Hard surfaces such as cabinets, wood, vinyl or tiled floors and paneled walls have a tendency to reflect normal appliance operating noises.

Listed below are common refrigeration components with a brief description of the normal operating sounds they make. NOTE: Your product may not contain all the components listed.

- Compressor: The compressor makes a hum or pulsing sound that may be heard when it operates.
- Evaporator: Refrigerant flowing through an evaporator may sound like boiling liquid.
- Condenser Fan: Air moving through a condenser may be heard.
- Automatic Defrost Drain Pan: Water may be heard dripping or running into the drain pan when the unit is in the defrost cycle.

Troubleshooting Guide

WARNING

WARNING - ELECTROCUTION HAZARD. Never attempt torepair or perform maintenance on the unit before disconnecting the main electrical power.

Troubleshooting - What to check when problems occur:

Problem	Possible Cause and Remedy
Interior Light Does Not Illuminate	Ensure the unit is plugged in and cooling.
Unit Develops Frost on Internal Surfaces.	Ensure the door is closing and sealing properly.
Unit Develops Condensation on External Surfaces.	The unit is exposed to excessive humidity. Moisture will dissipate as humidity levels decrease.
Product is Not Cold Enough	Air temperature does not indicate product temperature. See CHECKING PRODUCT TEMPERATURE below. Adjust the temperature to a cooler set point. Ensure unit is not located in excessive ambient temperatures or in direct sunlight. Ensure the door is closing and sealing properly. Ensure the interior light has not remained on too long. Ensure nothing is blocking the front grille, found at the bottom of the unit. Ensure the condenser coil is clean and free of any dirt or lint build-up.

Checking Product Temperature

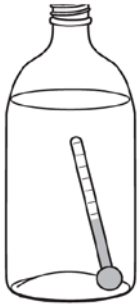

To check the actual product temperature in the unit:

1. Partially fill a plastic (nonbreakable) bottle with water
2. Insert an accurate thermometer.
3. Tighten the bottle cap securely.
4. Place the bottle in the desired area for 24 hours.
5. Avoid opening the unit during the testing period.
6. After 24 hours, check the temperature of the water.

If required, adjust the temperature control in a small increment (see Control Operation).

Causes which affect the internal temperatures of the cabinet include:

- Temperature setting.
- Ambient temperature where installed.
- Installation in direct sunlight or near a heat source.
- The number of door openings and the time the door is open.
- The time the internal light is illuminated. (This mainly affects product on the top rack or shelf.)
- Obstruction of front grille or condenser

WIRE DIAGRAM

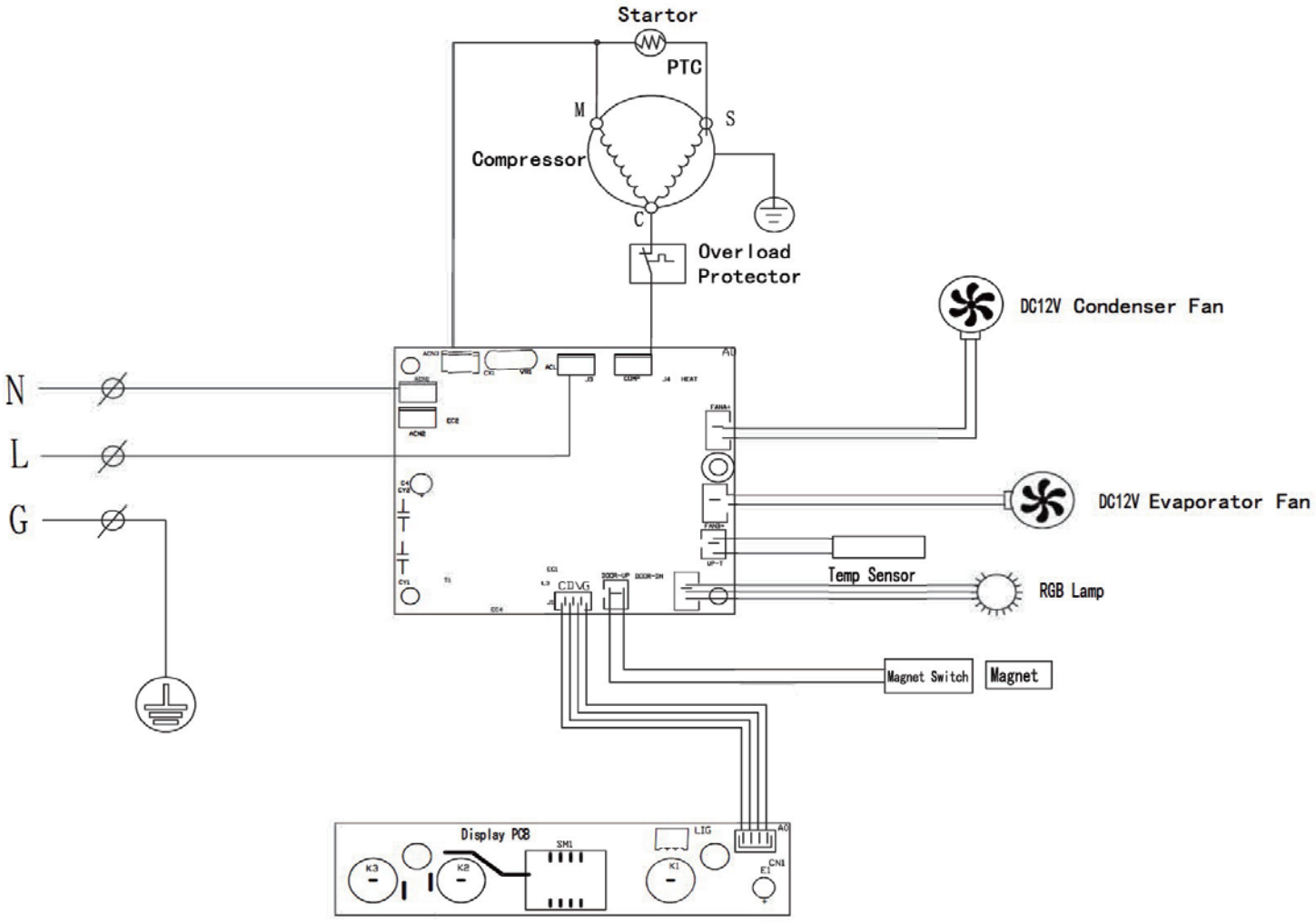

PRODUCT LIABILITY

Field service technicians are authorized to make an initial assessment in the event of reported damages. If there are any questions about the process involved, the technician should call Marvel for further explanation.

While inspecting for defects or installation issues, photos should be taken to document any damages or issues found.

During the assessment, if the service technician is able to find the source of the damage and it can be resolved by replacement of a part, the servicer is authorized to replace the part in question. The part that caused the damage must be returned to Marvel in its entirety. The part must be clearly labeled with the serial number of the unit it was removed from, the date, and the servicer who removed the part.

If the service technician determines the damage is the result of installation issues (water connection/drain, etc.), the consumer would be notified and the issues shall be resolved at the direction of the consumer.

If damage is evident and the service technician is unable to find the source, Marvel must be contacted at 616.754.5601 for further direction.

1260 E. Van Deinse St. • Greenville, MI 48838
T: 616.754.5601

WARRANTY CLAIMS

Before Calling for Service

The following information defines the parameters for filing a warranty claim:

- Valid serial number needed
- Valid model number needed
- Claims must be submitted online at marvelrefrigeration.com
- 60 day submittal deadline from date of completed service
- Only one repair or unit per warranty claim
- Part order numbers will be required when submitting for warranty labor

Units must be registered prior to warranty submittal Customers may register at marvelrefrigeration com/warranty-registration. A proof of purchase is required. We also accept the following information to update warranty:

- New construction occupancy documents
- Closing paperwork
- Final billing - Remodel

Warranty parts will be shipped at no charge after Marvel confirms warranty status. Please provide the model, serial number, part number and part description. Some parts will require color or voltage information.

ORDERING REPLACEMENT PARTS

Parts may be ordered online at marvelrefrigeration.com.

Or contact:

Phone Number: (616) 754-5601

NOTE

Use only genuine Marvel replacement parts. The use of non-Marvel parts can reduce performance, damage the unit, and void the warranty.

Warranty parts will be shipped at no charge after Marvel confirms warranty status. Please provide the model, serial number, part number and part description. Some parts will require color or voltage information.

Marvel requires the return of original parts, we will inform you when the parts order is taken. This requirement will be noted on your packing list. A prepaid shipping label will be emailed to you. Please enclose a copy of the parts packing list and be sure the model and serial numbers are legible on the paperwork. Tag the part with the reported defect.

Customers and non-authorized servicers may order non-warranty parts at marvelrefrigeration.com. Authorized servicers with a servicer login may order non-warranty parts at marvelrefrigeration.com

R600A Specifications & Handling

WARNING

Flammability warnings for a pure-iso-butane refrigerant.







Gloves and Eye Protection must be used.





R-600a is considered non-toxic, but is flammable when mixed with air.

Keep a dry powder type fire extinguisher in the work area.



R-600a is heavier than air, do not allow any leakage/migration to low areas such as basements and stairs.

Never use a torch on a fully charged refrigeration system.

Never substitute Marvel OEM replacement parts or methods of construction.

R-600a must be stored and transported in approved containers.

R600 SPECIFICATIONS

⚠ WARNING

Only skilled and well trained service technicians permitted to service R-600a equipped products.

All tools and equipment must be approved for use with R-600a refrigerant.

Local, state and federal laws, standards must be observed along with proper certification and licensing.

Ventilation is required during servicing.

No conversions to R-600a from any other refrigerants. OEM R-600a equipped unit only.

Service area must be free of ignition sources.

No smoking is allowed in the service area.

All replacement electrical components must be OEM and installed properly (sealed and covered).

If the evaporator is cold prior to service, it must be thawed prior to service.

When using a vacuum pump, start pump before opening refrigeration system.

Vacuum pump and recovery equipment should be at least 10 feet from the work area.

It is recommended that a simple LPG gas detector is on site during service.

Ensure that all R-600a is removed from the system prior to brazing any part of the sealed system.

Only a clean, dry leak free system should be charged with R-600a.

R-600A Specifications/Labeling

R-600a equipped products are labeled (both the unit and the compressor).

R-600a is colorless and odorless.

R-600a is considered non-toxic, but is flammable when mixed with air.

Do not remove or alter any R-600a labeling on the product.

Use only a refrigerant grade R-600a from a properly labeled container.

Recovering/Reclaiming R-600A

(R-600a has been exempted from recovery/reclaiming requirements by the US EPA)

Recovery/Reclaiming equipment must be approved for use with R-600a.

Ensure the evaporator is at room temperature prior to recovery/reclaiming R-600a.

Use a common piercing pliers or piercing valve to remove R-600a from the compressor process tube. (Note: Piercing devices must not be left on the system and must be replaced with a Schrader type valve).

Evacuate/reclaim via the piecing pliers to ensure the system is empty of R-600a before any system work is performed.



The recovery cylinder must be evacuated (no air inside) prior to accepting R-600a.

The recovery cylinder must not be filled more than 45% safe fill level and refrigerants must not be mixed.

The recovery cylinder must be clearly marked with R600a and Flammable Warning labels.

Ensure proper ventilation during recovery/reclaiming of R600a.

Start vacuum pump/recovery pump prior to piercing the compressor process tube.

Follow recovery/reclaim OEM instructions for the specific equipment used.

System Repair

Ensure no residual R-600a refrigerant is left within the system prior to repair (simple venting is not sufficient).

Evacuate and charge with dry nitrogen for leak checks.

Repair leaks or replace system parts as required.

When re-brazing, the system must be purged with dry nitrogen and at least one access point open to the atmosphere.

When re-brazing, proper ventilation is required along with constant monitoring for the presence of R600a refrigerant.

The filter dryer must be replaced any time the sealed system is serviced.

No system should be open to the atmosphere for longer than 15 minutes to avoid moisture migration into the system components.

Leak Detection

After removal of the R-600a, the unit can be charged with dry nitrogen or helium.

Electronic leak detection or soap solution can be used tocheck for nitrogen/helium leaks.



Never use a halide torch or lighted match to check the system for leaks at any time.

The high side of the refrigeration system (compressor discharge to outlet of drier) must be leak tested with the compressor running.

The low side of the refrigeration system (evaporator, compressor and suction line) must be leak tested with the compressor off (equalized pressure).

Recharging

No air is ever to be allowed inside the refrigeration system (R-600a refrigerant or dry nitrogen only).

Never use a torch on a fully charged refrigeration system.

Install a Schrader Type access port on the compressor process stub.



Evacuate the system to 100 microns prior to charging.

Weigh in the R-600a charge using a refrigerant scale (run compressor an extra two minutes to clear the charging hoses).

Seal the Schrader Type access port, a proper cap and seal must be used to close the system.



Summary

Safely handling R-600a requires proper procedures and training.

R-600a approved service tools must be used.

R-600a labeling must not be removed or altered.

Proper ventilation during service is required.

Never apply a torch to a charged R-600a refrigeration system.

Use OEM replacement service parts and do not alter the construction of the unit.

Proper ventilation during service is required.

Never apply a torch to a charged R600a refrigeration system.

Use OEM replacement service parts and do not alter the construction of the unit.

No air is ever to be allowed inside the refrigeration system (R600a refrigerant or dry nitrogen only).

Never use a torch on a fully charged refrigeration system. Install a Schrader Type access port on the compressor process stub.

The filter dryer must be replaced any time the sealed system is serviced.

No system should be open to the atmosphere for longer than 15 minutes to avoid moisture migration into the system components.

Leak Detection

After removal of the R600a, the unit can be charged with dry nitrogen or helium.

Electronic leak detection or soap solution can be used to check for nitrogen/helium leaks. Evacuate and charge with dry nitrogen for leak checks.

CLEANING AND MAINTENANCE

- **Clean the Condenser Every Six Months**

⚠ CAUTION

Failure to keep the condenser clean can result in permanent damage to the compressor.

The condenser coil is located near the compressor and usually at the bottom of the machine. In order for the condenser to perform efficiently, it must be cleaned about every six months to remove dust and debris and prevent overheating.

- **Deep Clean the Ice Machine Every Six Months**

⚠ CAUTION

Neglecting this cleaning will lead to mold or mildew buildup, cloudy ice, reduced water flow, reduced ice production, and damage to the machine.

⚠ CAUTION

Use only manufacturer-approved, nickel-safe ice machine cleaner and follow all label warnings and directions. Order ice machine cleaner online: marvelrefrigeration.com.

Every six months the ice machine requires a thorough cleaning to remove debris from the bin and flush out impurities that accumulates from the water supply; clear, craft, and nugget machines are equipped with a built-in cleaning cycle.

⚠ CAUTION

- **Clean Stainless Steel Surfaces**

Your machine is built with quality stainless steel, but it can still rust when not properly maintained.
- Avoid exposure to outdoor elements such as rain, snow, sprinklers or pool splash.
- Use only a non-chlorine, non-abrasive stainless steel cleaner.
- Inspect the machine for any signs of rust. When spotted early, the rust is only on the surface and can usually be scrubbed off.

SAFE INSTALLATION AND MAINTENANCE

- **Outdoor Operation**

⚠ CAUTION

Only machines designed for outdoor use may be operated outdoors.
- The machine should be installed under cover, to avoid exposure to rain, snow, and direct sun.
- The machine should not be not be exposed to chlorinated water such as from pool or hot tub splash.
- Do not operate in temperatures below 45°F (7°C) or above 100°F (38°C).

- **Indoor Operation**
- Install where the machine will not be exposed to direct sunlight - especially if the appliance a glass door.
- Do not install the machine where it will be exposed to chlorinated water such as from an indoor pool or hot tub splash.
- Do not operate in temperatures below 50°F (10°C) or above 100°F (38°C).

- **Location and Ventilation**
- Do not block the grille on the front base of the machine; proper airflow is essential to cooling.
- Do not operate the appliance inside a cabinet; it has been designed to operate under a counter or free-standing (certain models only).

- **Proper Sealing - Beverage Dispensers**
- If not sealed properly, excessive condensation, limited cooling, and damage to the machine will occur. When correctly installed, the insulation should extend from within the refrigerator, through the counter, and into the tap tower.

ELECTRICAL AND DRAINAGE REQUIREMENTS

- **Operate With a Safe Electrical Connection**

⚠ CAUTION

Only operate the appliance on a dedicated circuit to avoid power fluctuations and overloads.
- Do not use an extension cord. Only the supplied power cord directly connected to an outlet ensures that the machine will safely receive adequate power. Extension cords can become unplugged accidentally, overheat, or become damaged. Improper electrical connection will void the warranty.

- **Operate With Proper Drainage**

If your appliance requires a drain hookup consult a plumber for proper installation. Improper drainage can cause damage to the machine as well as its surroundings. Improper drainage will void the warranty.

Marvel Limited Warranty

ONE YEAR LIMITED PARTS & LABOR WARRANTY – Northland Collection

For one year from the date of original purchase, this warranty covers all parts and labor to repair or replace any part of the product that proves to be defective in materials or workmanship. For products installed and used for normal residential use, material cosmetic defects are included in this warranty, with coverage limited to 60 days from the date of original purchase. All service provided by Marvel Refrigeration under the above warranty must be performed by a Marvel Refrigeration factory authorized servicer, unless otherwise specified by Marvel Refrigeration. Service provided during normal business hours.

TWO YEAR LIMITED PARTS & LABOR WARRANTY – Essential Collection

For two years from the date of original purchase, this warranty covers all parts and labor to repair or replace any part of the product that proves to be defective in materials or workmanship. For products installed and used for normal residential use, material cosmetic defects are included in this warranty, with coverage limited to 60 days from the date of original purchase. All service provided by Marvel Refrigeration under the above warranty must be performed by a Marvel Refrigeration factory authorized servicer, unless otherwise specified by Marvel Refrigeration. Service provided during normal business hours.

LIMITED SIX YEAR SEALED SYSTEM PARTS WARRANTY – Essential Collection

For six years from the date of original purchase, Marvel will cover the following parts only (no labor) if they prove to be defective under normal residential use: compressor, condenser, evaporator, drier, and connecting tubing.

WARRANTY TERMS

These warranties apply only to products installed in any one of the fifty states of the United States, the District of Columbia, or the ten provinces of Canada. The warranties do not cover any parts or labor to correct any defect caused by negligence, accident or improper use, maintenance, installation, service, repair, acts of God, fire, flood or other natural disasters. The product must be installed, operated, and maintained in accordance with Marvel Brand User Guides.

The remedies described above for each warranty are the only ones that Marvel will provide, either under these warranties or under any warranty arising by operation of law. Marvel will not be responsible for any consequential or incidental damages arising from the breach of these warranties or any other warranty, whether express, implied, or statutory. Some states do not allow the exclusion or limitation of incidental or consequential damages, so the above limitation or exclusion may not apply to you. These warranties give you specific legal rights, and you may also have other rights which vary from state to state.

Any warranty that may be implied in connection with your purchase or use of the product, including any warranty of merchantability or any warranty fit for a particular purpose is limited to the duration of these warranties. Some states do not allow limitations on how long an implied warranty lasts, so the above limitations may not apply to you.

The warranties only apply to the original purchaser and are non-transferable.

The warranties apply to units operated outside only if designed for outdoor use by model and serial number.

Replacement water filters, light bulbs, and other consumable parts are not covered by these warranties.

The start of Marvel's obligation is limited to four years after the shipment date from Marvel.

In-home instruction on how to use your product is not covered by these warranties.

Food, beverage, and medicine loss are not covered by these warranties.

If the product is located in an area where Marvel factory authorized service is not available, you may be responsible for a trip charge or you may be required to bring the product to a Marvel factory authorized service location at your own cost and expense.

Units purchased after use as floor displays, and/or certified reconditioned units, are covered by the limited one year warranty only and no coverage is provided for cosmetic defects.

Signal issues related to Wi-Fi connectivity are not covered by these warranties.

Equipment that is not installed, operated and maintained in accordance with Marvel's Use and Care Manual or other written materials provided to you by Marvel or available for the Equipment (as may be updated by Marvel from time to time, the "Manual"), a copy of which is provided to you with the Equipment or otherwise will be furnished to you upon request, is excluded from this warranty. This warranty does not apply to damage or failure which results, in Marvel's or its service agent's sole opinion, from failure to provide a suitable installation and operating environment (including power and HVAC if applicable) and facilities as prescribed by the Manual, misuse, abuse, accident or improper use, neglect, power failure or power surges (over or under voltage), or to damage or failure from flood, fire, lightning or other natural or man-made disasters, or other Acts of God, or to Equipment that has missing or altered serial numbers.

Modifications and Repair: Equipment that has been modified or altered by persons other than Marvel's or its service agents, or Equipment that has had non-approved devices or connection items attached thereto, is excluded from coverage under this warranty. Repair of the Equipment by anyone other than Marvel's or its authorized service agents will void all warranties on the Equipment.

Accessories: Accessories and parts (collectively "Accessories") that are consumed in the normal course of Equipment operation or maintenance are excluded from this warranty. Failure of or damage to Equipment or components from the use of non-approved cleaning chemicals, devices or processes is also excluded from this warranty.

Warranty Service, Exclusive Remedy

Marvel will be solely responsible for determining whether or not the Equipment or any component thereof is defective. Defective components covered by this warranty will be repaired or replaced at Marvel's option without charge to you and such repaired or replacement components will be covered by this warranty for the balance of the Warranty Period. Parts used in the repair of defective components and replacement components may be new, recovered or rebuilt. At its sole option, Marvel may decide to replace defective Equipment covered by this warranty with new, recovered or rebuilt Equipment of equal or greater capability, and such Equipment will be covered by this Limited Warranty for the balance of the Warranty Period. Defective Equipment and components will become the property of Marvel. This paragraph states Marvel's sole and exclusive obligation and liability and your sole and exclusive remedy under this warranty. Marvel shall not be responsible for a failure to provide warranty services due to causes beyond Marvel's or its service agents' control.

Warranty Claims

Claims under this warranty must be reported to Marvel under such reporting service as Marvel may designate. Upon receipt of the claim and related information and preliminary verification that the claim is valid, Marvel will promptly notify an authorized service agent to contact you and arrange for an on-site repair visit during the service agent's normal working hours. Any costs incurred by Marvel or its service agent associated with a service agent being refused or unable to gain access to the Equipment on your premises, or a claim not covered by this warranty, will be charged to you.

Disclaimer of Damages

Marvel disclaims all incidental, special and consequential damages, including but not limited to loss of use, lost revenue or profits, or substitute use, suffered by you or any third party, whether arising in contract, tort (including negligence), or otherwise, resulting from any breach by Marvel or its service agents of this warranty, or resulting from the manufacture, use, or defects, of or in the Equipment, even if Marvel was apprised of the possibility of such damages.

Customer Indemnity

You agree to indemnify, defend and hold Marvel harmless from all third-party claims, demands, judgments, fees and costs directly or indirectly arising out of or related to your use of the Equipment. You further agree to indemnify and hold Marvel harmless from any incidental, consequential or special damage suffered by you, including lost revenue or profits, loss of use, or substitute use, during periods of Equipment failure or loss of use.

Governing Law, Entire Warranty

This warranty shall be governed and construed in accordance with the laws of the State of Michigan, USA (except with respect to its provisions regarding conflicts of laws). The warranty described herein is the complete and only warranty for Equipment and supersedes all prior oral or written agreements and understandings that may have existed between us relating to Equipment warranties. The terms of this warranty may not be altered, amended or modified except by a signed writing from Marvel. Any purported alteration, amendment or modification by a service agent or anyone else will not be enforceable against Marvel.

Charges for Non-Warranty Service or Rejection of Service Visit

In the event that repairs, replacement or service are provided by Marvel's service agents for work not covered by this limited warranty, customers agree to pay the service agent directly according to the service agent's normal scale of charges. In the event Marvel is invoiced by the service agent for services not covered under this extended warranty, Marvel will invoice customer, and customer will pay such invoice based on terms of net 10 days. Customer also agrees to pay any cost incurred by Marvel or its service agent associated with a service agent responding to a call for service but then being refused or unable to gain access to the Equipment on Customer's premises. Failure to submit payment may, at Marvel's discretion, result in Marvel voiding the balance of the warranty. In no event will Marvel authorize a customer with an outstanding Non-Warranty invoice.

For parts and service assistance, or to find factory authorized service near you, contact Marvel at 616.754.5601.



Marvel Refrigeration
1260 E. Van Deinse St.
Greenville MI 48838

616.754.5601

All specifications and product designs subject to change without notice. Such revisions do not entitle the buyer to corresponding changes, improvements, additions, replacements or compensation for previously purchased products.