NORCOLD® INC.

Service Manual

Gas Electric Refrigerators

MODELS

N41X Series

N500 Series

N51X Series

Improper installation, adjustment, alteration, service or maintenance can cause personal injury or property damage. Refer to this manual. For assistance or additional information, contact a qualified installer, service agency, or the gas supplier.

Questions? 1-800-444-7210

© 2015 NORCOLD, INC. All rights reserved.

Part No. 626800 Rev. B 07.12.2015

TABLE OF CONTENTS

Table of contents 2
Introduction 4
About This Manual 4
Model Identification 4
Information Label 4
Cooling Unit Serial Number 4
Certification and Code Requirements 4
About Installation 4
Replacement Parts 4
Technical Assistance 4
Safety Awareness 6
Safety Notice 6
Attention Statements 6
Specifications 7
N41X Models 7
N500 Models 8
N51X Models 9
Troubleshooting - Quick Reference Guide 10
N41X /N51X Displayed Fault Codes 11
Troubleshooting Flowcharts - N500 Units 12
Burner Will Not Maintain Flame - N500 Units 12
No AC Operation - N500 Units 13
No DC Operation - N500.3 (3-Way Units Only) 14
No Gas Operation - N500 Units 15
Thermocouple and Interrupter Malfunctioning - N500 Units 16
Troubleshooting flowcharts - N41X/N51X Units 17
Blank Display - Refrigerator does not turn on - N41X/N51X 17
Optical Display Does Not Turn On - Power is available - N41X/N51X 17
On-Off Theory of Operation - N41X / N51X 17
“F” Fault Code - Burner failed to ignite or reignite - N41X/N51X 19
“E” Fault Code - DC voltage high - N41X/N51X 20
“C” Fault Code - DC voltage low - N41X/N51X 20
“A” Fault Code - No AC power available - N41X/N51X 21
“S” Fault Code - Flame sense circuit failure - N41X/N51X 21
“H” Fault Code - AC heater failed open - N41X/N51X 22
“r” Fault Code - AC relay stuck closed - N41X/N51X 22
Thermistor Failure Fault - Controls in Backup Operating System Mode - N41X/N51X 23
Backup Operating System - N41X/N51X Models 23
“N” Fault Code - No cooling detected by the controls - N41X/N51X 24
Power Board Resetting Procedure 24
Ventilation 25
Roof Exhaust Venting 25
Double Sidewall Venting 25
Propane Gas System - N500 27
Components 27
Propane Gas System - N41X/N51X 28
Components 28
Propane Gas System - All Models 29
Components Continued - All Models 29
Handling of Propane Gas Lines and Fittings 29
Propane Gas Pressure 30
Testing for Gas Leakage 30
Burner Cleaning Procedure 31
Electrical Requirements and Components 32
AC Power 32
DC Power 32
AC Power Cord 34
N500 Terminal Block 34
AC/DC Converter as Power Source 34
Cooling Unit 35
Description 35
Gradual Decrease in Cooling Efficiency 35
Cooling Monitoring - N510 Units Only 35
Refrigerant Leakage - All Models 36
Disposal of Cooling Unit - All Models 36
Cooling System Diagnostic Flowchart 37
Electronic Components - All Models 39
Spark/Sense Electrode - All Models 39
Electronic Components - N500 Models 39
Relighter - N500 Models 39
Flame Indicator - N500 Models 39
Electronic Components - N41X/N51X Models 40
Power Board - N41X/51X Models 40
Controls 41
N500 Controls 41
N41X/N51X Controls 42
N41X/N51X Modes of Operation 43
N41X/N51X Diagnostic Mode 46
Diagnostic Mode 46
Wiring Pictorials and Diagrams 49

Figures

Figure 1. Information label location 5
Figure 2. Cooling unit label location 5
Figure 3. Jumping interrupter terminals..... 12
Figure 4. Checking thermocouple voltage output to interrupter..... 16
Figure 5. Checking angled terminal to ground..... 16
Figure 6. Checking voltage across terminals..... 16
Figure 7. Checking straight terminal to ground..... 16
Figure 8. Checking DC fuse continuity 17
Figure 8A. Continuous 12 -Volts..... 18
Figure 8B. Switched 12-Volts 18
Figure 9. Measuring AC heater resistance 22
Figure 10. Thermistor assembly..... 23
Figure 11. Checking thermistor resistance 23
Figure 12. Resetting the power board 24
Figure 13. Roof vented ventilation arrangement 25
Figure 14. Roof vented ventilation with roof vent inboard of condenser 25
Figure 15. Double sidewall ventilation arrangement..... 26
Figure 16. Baffles required for sidewall venting..... 26
Figure 17. N500 propane gas system components..... 27
Figure 18. N500 manual shutoff valve..... 27
Figure 19. LP14 orifice 27
Figure 21. N41X/N51X propane gas system components..... 28
Figure 22. N41X/N51X solenoid gas valve..... 28
Figure 23. LP14 orifice 28
Figure 24. Gas flame appearance. 29
Figure 25. Flue and components..... 29
Figure 26. AC heater in heater well 32
Figure 27. DC heater..... 33
Figure 28. N500 AC power cord 34
Figure 29. N41X/N51X AC power cord..... 34
Figure 30. Terminal block and connections 34
Figure 36. Spark/sense electrode..... 39
Figure 37. Relighter and connections..... 39
Figure 38. N510 Power Board..... 40
Figure 39. N500 Controls 41
Figure 41. N41X/N51X Controls..... 42
Figure 44. N41X/N51X Optical Control Assembly. 46
Figure 45. Diagnostic LEDs segments identification 46
Figure 46. N500 wiring pictorial..... 49
Figure 47. N500 wiring diagram 49
Figure 48. N41X/N51X wiring pictorial..... 50

INTRODUCTION

About This Manual

This service manual provides maintenance, diagnostic, and repair information for **NORCOLD**® model N41X/ N500/N51X Series gas absorption refrigerators. It is a reference tool designed for technicians who are knowledgeable in the theory and operation of gas/electric absorption refrigerators, liquefied petroleum (LP) gas–propane–systems, and AC/DC electrical systems as installed in a variety of recreational vehicles (RV).

All information, illustrations, and specifications contained in this publication are based on the latest product information available at the time of publication. **NORCOLD**® reserves the right to make changes at any time without notice.

Model Identification

Models N41X, N500 and N51X are 2-way refrigerators that can operate on AC power or propane gas. The electronic controls operate on 12 Vdc.

Models N41X.3, N500.3 and N51X.3 are 3-way refrigerators that can operate on AC power, propane gas, or DC power. The electronic controls operate on 12 Vdc.

Information Label

The information label is located in the upper right corner of the fresh food compartment just below the freezer compartment. See Figure 1. The label provides the following information:

- Serial number.
- Model number.
- LP gas (propane) pressure.
- Btu/hr.
- AC voltage and amperage.
- DC voltage and amperage.
- Design certification.
- Vent kit requirement.

Cooling Unit Serial Number

The cooling unit has a separate serial number that appears on the cooling unit bar code label. The label is affixed to the surface of the cooling unit leveling chamber. See Figure 2.

Certification and Code Requirements

NORCOLD® N500/N510 gas/electric absorption refrigerators are certified under the latest edition of ANSI Z21.19B standards for installation in mobile homes or recreational vehicles. NORCOLD® N41X, N500, and N51X gas/electric absorption refrigerators are also certified with the Canadian Standards Association, CAN/CGA-1.4-M94.

Electrical components are UL compliant.

About Installation

Refrigerator installation must conform with the *N41X/N51X Installation Manual* for the **NORCOLD**® limited warranty to be in effect. Installation must also comply with applicable local codes and standards set by the cognizant certification agency.

Replacement Parts

Use only authorized **NORCOLD**® replacement parts. Generic parts do not meet **NORCOLD**® specifications for safety, reliability, and performance. The use of unauthorized aftermarket or generic replacement parts voids the refrigerator's limited warranty coverage.

Technical Assistance

If technical issues are unable to be resolved using the information provided in this manual, technical support for service technicians is available through the **NORCOLD**® Customer Service Center:

☎	Telephone	1-800-444-7210
	Fax	1-734-769-2332
	World Wide Web	www.norcold.com

The following information is required to process technical support requests:

- Model number.
- Serial number.
- Make, model, and year of recreational vehicle.

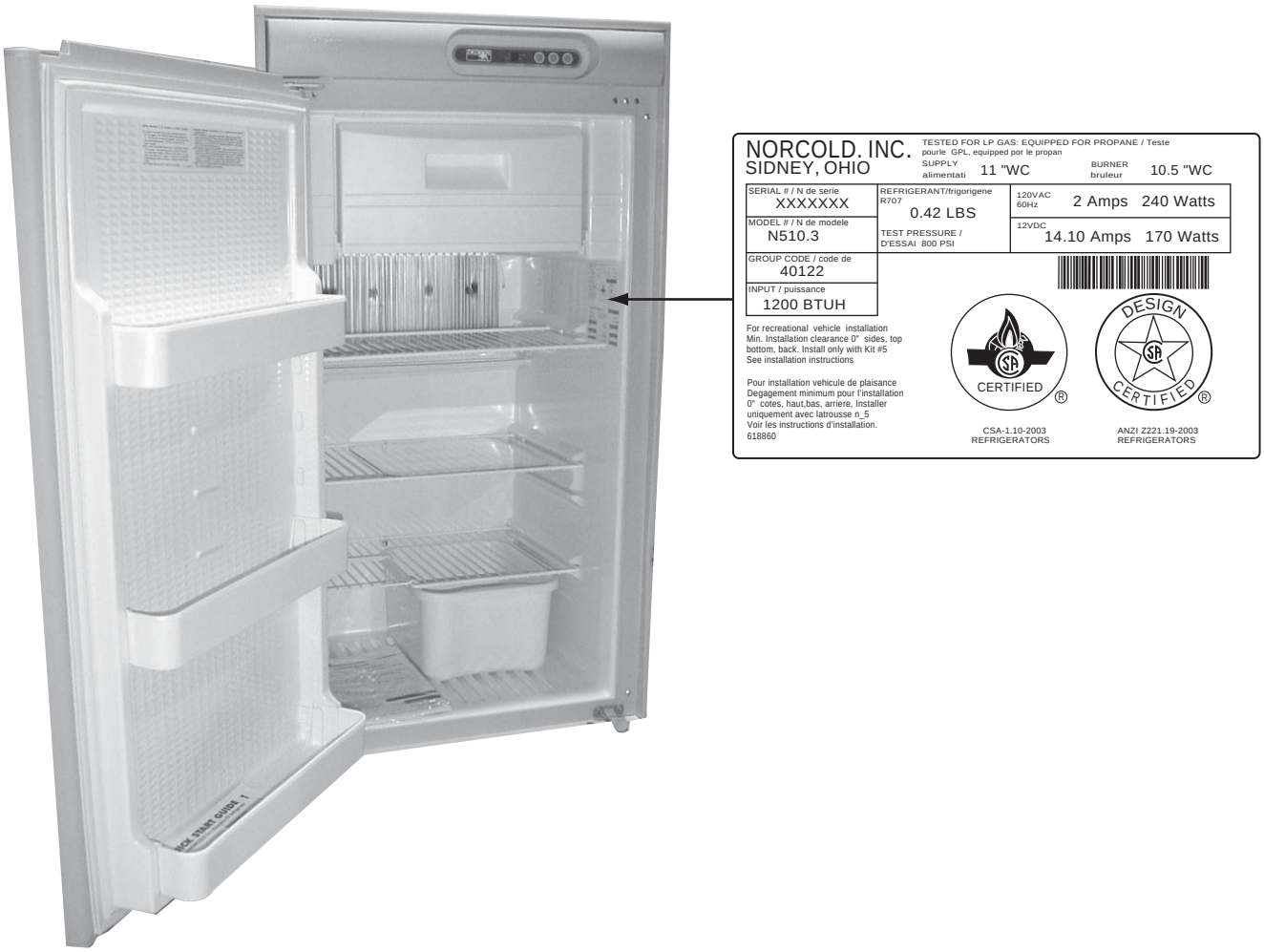

Figure 1. Information label location

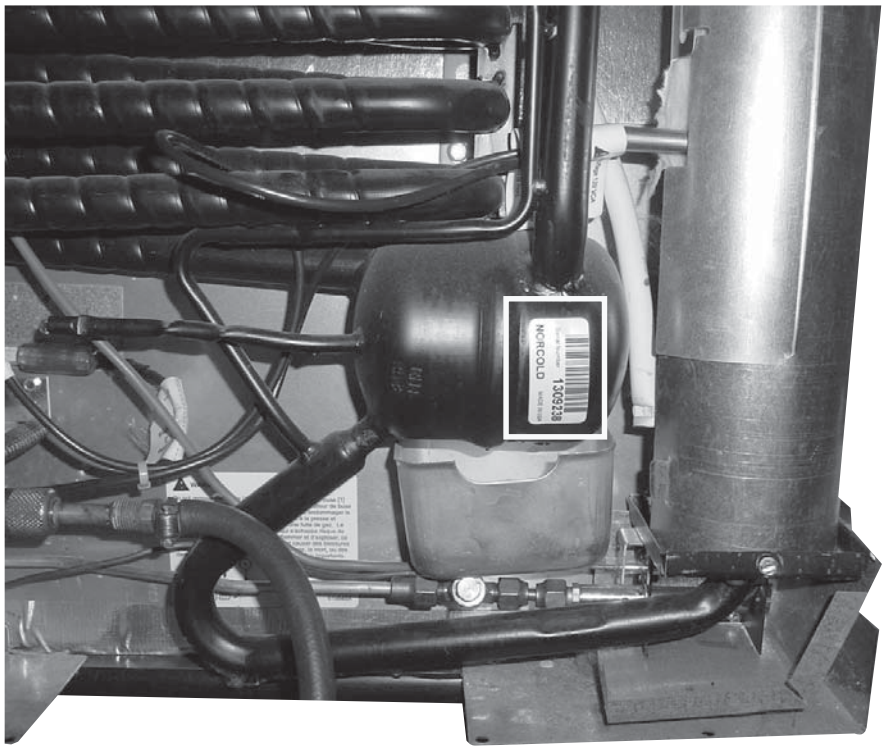

Figure 2. Cooling unit label location

SAFETY AWARENESS

Safety Notice

It is not possible to anticipate all of the conceivable ways or conditions under which the refrigerator may be serviced or to provide cautions as to all of the possible hazards that may result. Standard and accepted safety precautions and equipment should be used when working on electrical circuits and handling toxic or flammable materials. Safety goggles and other required protection should be used during any process that can cause material to become airborne, such as removing a leaking cooling unit and cleaning components.

Attention Statements

The safety alert symbol ⚠ followed by the word ***WARNING*** or ***CAUTION*** identifies potential safety hazards or conditions.

The safety alert symbol with the appropriate heading appears on all safety labels posted on the refrigerator and safety awareness notices presented throughout this manual.

> ⚠ ***WARNING:*** This heading identifies hazards or conditions, which if ignored can cause serious injury, death, and/or extensive property damage.

> ⚠ ***CAUTION:*** This heading identifies hazards, which if ignored can cause injury and/or property damage.

⚠ *WARNING:*

Do not modify, alter, or equip the refrigerator to the use of any other fuel (natural gas, butane, etc.). N410/N500/N510 refrigerators are designed and equipped for the use of LP gas–*propane gas*–only.

Incorrect installation, adjustment, alteration, or maintenance of the refrigerator can cause personal injury, property damage, or both.

Do not smoke, light fires, or create sparks when working on the propane gas system.

Do not use an open flame for leak testing any of the propane gas system components. Propane gas is highly flammable and explosive.

Always use two wrenches to tighten or loosen LP gas connections. Damaged connections, piping, and components create the potential for gas leaks.

All electrical connections and repairs to the refrigerator must comply with all applicable codes. Refer to the certification and code requirements section of the *N410/N500/N510 Installation Manual* for more information.

Do not work on live electrical circuits. Turn off AC power and DC power sources before attempting to remove, service, or repair any of the refrigerator's electrical or electronic components.

Do not modify, bypass, or eliminate any of the refrigerator's electrical components, electronic circuits, or propane gas system components.

Do not wet or spray liquids on or near electrical connections or electronic components. Most liquids, including leak detection solutions, are electrically conductive and pose the potential for an electric shock hazard, short electrical components, damage electronic circuits, and/or ignite a fire.

Do not use leak test solutions that contain ammonia or chlorine. Ammonia and chlorine degrade copper and brass components.

The cooling unit is a sealed system under pressure! Do not try to repair or recharge the cooling unit. **Do not** bend, drop, weld, drill, puncture, saw, or strike the cooling unit.

Handle a leaking cooling unit with extreme caution! The cooling unit contains ammonia, hydrogen, and sodium chromate. Ammonia can cause severe skin and eye burns. Hydrogen is highly flammable, can ignite, and burns with an intense flame. Certain chromium compounds, such as sodium chromate, are carcinogenic.

Do not use extension cords. **Do not** remove the grounding prong from the refrigerator AC power cord. **Do not** use a two prong adapter to connect the refrigerator to the AC outlet.

Do not over-fuse electrical circuits. Use specified fuses and AWG wire sizes. The "Specifications" section of this manual provides fuse size information. Refer to the *N410/N500/N510 Installation Manual* for the correct AWG wire size specifications.

Prevent child entrapment! Before disposing of the refrigerator, remove all doors and fasten all shelves with retainers.

⚠ *CAUTION:*

Some of the refrigerator's metal components have sharp corners and edges. Wear hand protection, such as cut-resistant gloves, and exercise extreme care when handling the refrigerator.

Make sure all hardware, such as hinges and fasteners (retaining screws, etc.), are properly fastened.

SPECIFICATIONS

N41X Models

Storage volume
N41X ---------- 5.5 ft^3.

Rough opening dimensions (H x W x D)
N41X ---------- 36.56 - 36.69 in. x 23.69 - 23.82 in. x 24 in.

Decorative panels dimensions
Thickness ---------- 3/16 in.
Door panel dimensions (H x W) ---------- 31 in. x 21 5/16 in.

Controls
Type ---------- Electronic with built-in diagnostic function
ON/OFF/MODE/TEMP SET switches ---------- Flush pushbutton style
Temperature settings ---------- 1=cold, 5=coldest
Temperature sensor ---------- Thermistor, fin-mounted on 5th fin

Off-level operating limits
Side-to-side ---------- 3 degrees maximum
Front-to-back ---------- 6 degrees maximum

DC power
Controls operating voltage ---------- 10.5 to 15.4 Vdc
Controls DC fuse (F2 in power board) ---------- 3 A type 3AG
DC operation voltage (3-way models only) ---------- 12 VDC to 15 Vdc
DC heater rating (3-way models only) ---------- 10.7 amps @12 VDC (resistance is 1.3 ohms)

DC amp draws (at nominal 12 Vdc)
Automatic ignition ---------- 0.50 A
Gas valve ---------- 0.146 A

AC power
AC heater operating voltage requirements ---------- 108 to 132 Vac
Fuse AC heater circuit (F3 in power board) ---------- 5 A, 1/4 in. x 1 1/4 in. AGC type fast acting
AC heater rating ---------- 200 W @ 110 VAC (resistance of 61.3 ohms)

Propane gas
Operating pressure ---------- 10.5 to 11.5 in. w.c.
Heat input ---------- 1200 Btu/h @ 11 in. w.c.
Orifice ---------- LP14

Gas ignition ---------- Automatic with flame-sensing circuit
Electrode-to-burner air gap ---------- 3/16 in.

N500 Models

Storage volume
N500 ---------- 5.5 ft^3.

Rough opening dimensions (H x W x D)
N500 ---------- 42 5/8 in. x 23 11/16 in. x 24 in.

Decorative panels dimensions
Thickness ---------- 3/16 in.
Door panel dimensions (H x W) ---------- 31 in. x 21 5/16 in.

Controls
Type ---------- Top mounted
Temperature settings ---------- 1=cold, 5=coldest
Temperature sensor ---------- Capillary tube

Off-level operating limits
Side-to-side ---------- 3 degrees maximum
Front-to-back ---------- 6 degrees maximum

DC power
Ignition circuit operating voltage ---------- 10.5 to 15.4 Vdc
Relighter ---------- 1.3 amp type 3AG
DC operation voltage (3-way models only) ---------- 12 VDC to 15 Vdc
DC heater rating (3-way models only) ---------- 10.7 amps @12 VDC (resistance is 1.3 ohms)

DC amp draws (at nominal 12 Vdc)
Automatic ignition ---------- 0.50 A

AC power
AC heater operating voltage ---------- 108 to 132 Vac
AC heater circuit fuse ---------- 5A, 1/4 in. x 1 1/4 in. AGC type fast acting, inline
AC heater rating ---------- 200 W @ 110 VAC (resistance of 61.3 ohms)

Propane gas
Operating pressure ---------- 10.5 to 11.5 in. w.c.
Heat input ---------- 1200 Btu/h @ 11 in. w.c.
Orifice ---------- LP14
Gas ignition ---------- 12 VDC ignition module
Electrode-to-burner air gap ---------- 3/16 in.

N51X Models

Storage volume
N51X ---------- 5.5 ft^3.

Rough opening dimensions (H x W x D)
N51X ---------- 42.63 - 42.69 in. x 23.69 - 23.82 in. x 24 in.

Decorative panels dimensions
Thickness ---------- 3/16 in.
Door panel dimensions (H x W) ---------- 31 in. x 21 5/16 in.

Controls
Type ---------- Electronic with built-in diagnostic function
ON/OFF/MODE/TEMP SET switches ---------- Flush pushbutton style
Temperature settings ---------- 1=cold, 5=coldest
Temperature sensor ---------- Thermistor, fin-mounted on 5th fin

Off-level operating limits
Side-to-side ---------- 3 degrees maximum
Front-to-back ---------- 6 degrees maximum

DC power
Controls operating voltage ---------- 10.5 to 15.4 Vdc
Controls DC fuse (F2 in power board) ---------- 3 A type 3AG
DC operation voltage (3-way models only) ---------- 12 VDC to 15 Vdc
DC heater rating (3-way models only) ---------- 10.7 amps @12 VDC (resistance is 1.3 ohms)

DC amp draws (at nominal 12 Vdc)
Automatic ignition ---------- 0.50 A
Gas valve ---------- 0.146 A

AC power
AC heater operating voltage requirements ---------- 108 to 132 Vac
Fuse AC heater circuit (F3 in power board) ---------- 5 A, 1/4 in. x 1 1/4 in. AGC type fast acting
AC heater rating ---------- 200 W @ 110 VAC (resistance of 61.3 ohms)

Propane gas
Operating pressure ---------- 10.5 to 11.5 in. w.c.
Heat input ---------- 1200 Btu/h @ 11 in. w.c.
Orifice ---------- LP14

Gas ignition ---------- Automatic with flame-sensing circuit
Electrode-to-burner air gap ---------- 3/16 in.

TROUBLESHOOTING - QUICK REFERENCE GUIDE

Problem	Possible Cause	Checks
The refrigerator does not turn ON.	No 12 Vdc power to refrigerator. Faulty/loose 12 Vdc connections. F1 fuse in power board open.	Check 12 Vdc connections. Check fuse (N41X/N51X).
The refrigerator does not cool on AC power.	No AC power to refrigerator. F3 fuse or AC heater inline fuse open. AC heater failed open.	Check fuse. Check heater resistance and continuity.
The refrigerator does not cool efficiently on AC power.	Ventilation obstructed. AC voltage low.	Check enclosure for air flow obstructions. Check AC voltage input.
3-Way Units Only The refrigerator does not cool on DC power.	F2 fuse or DC heater inline fuse open. DC heater failed open.	Check fuse. Check heater resistance and continuity.
3-Way Units Only The refrigerator does not cool efficiently on DC power.	Ventilation obstructed. DC voltage below 12 volts.	Check enclosure for obstructed air flow. Check DC power input.
The refrigerator does not operate on propane gas.	No propane gas. Incorrect electrode-to-burner gap. Faulty spark/sense electrode assembly. Flame sensing circuit failure.	Check propane gas supply and valves. Set electrode to 3/16 in. Replace spark/sense electrode. Replace power board (N41X/N51X).
The refrigerator does not cool efficiently on propane gas.	Ventilation obstructed. Incorrect propane gas pressure. Dirty burner. Missing flue baffle. Flue cap blocked.	Check enclosure for obstructed air flow. Set gas pressure to 10.5 to 11.5 in. w.c. Clean burner. Replace flue baffle. Clear flue cap.
Poor or no cooling.	Poor ventilation. Off-level operation. Dirty burner. Low AC voltage. Cooling fan inoperative (if present). Improper installation. Incorrect orifice.	Check enclosure for obstructed air flow. Level unit. Clean burner. Check AC voltage input. Test fan operation. Check installation. See *N41X/N51X Installation Manual.* Install correct orifice (LP14).

N41X /N51X DISPLAYED FAULT CODES

Code	Probable Cause
Blank Display Screen	Refrigerator turned off. No 12 Vdc to refrigerator. F1 fuse open.
	Burner failed to ignite or reignite.
	Flame sense circuit failure.
	DC voltage low.
	DC voltage high.
	AC relay stuck closed.
	No AC power available to refrigerator. AC cord not plugged into power board. F3 fuse open.
	AC heater failed open.
Flashing Temp Setting	Backup operating system in operation.
	No cooling detected by the controls.

Burner Will Not Maintain Flame - N500 Units

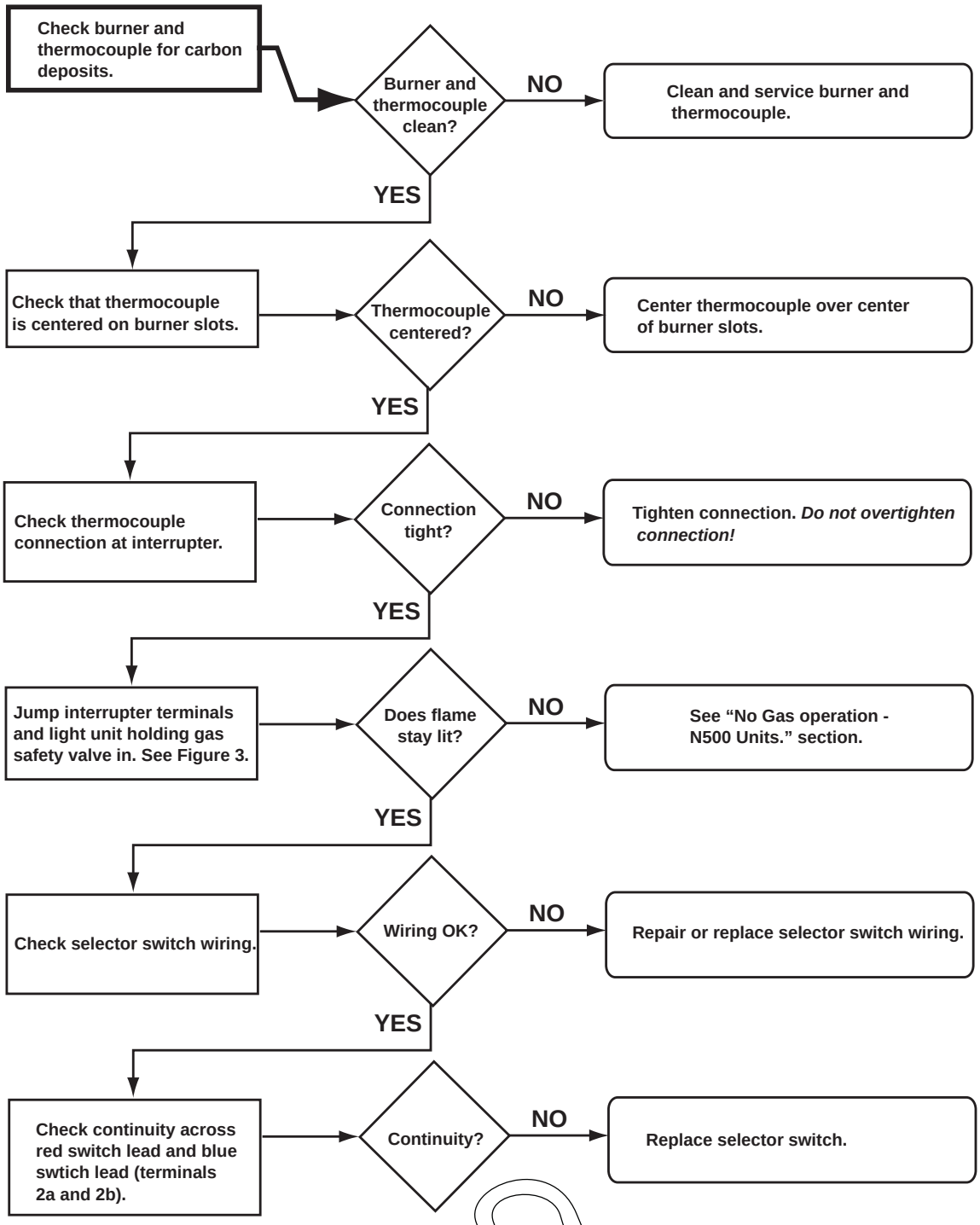

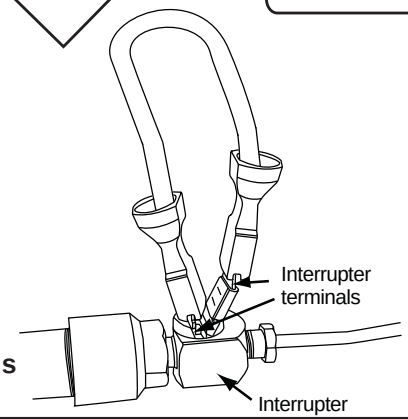

Figure 3. Jumping interrupter terminals

No AC Operation - N500 Units

Before beginning this procedure make sure:

- The refrigerator is receiving 108 (minimum) to 132 (maximum) Vac from a grounded receptacle.
- Fuse holder and 3 amp fuse are in good condition.
- Selector knob is set to "AC."
- Thermostat knob is set to 5.

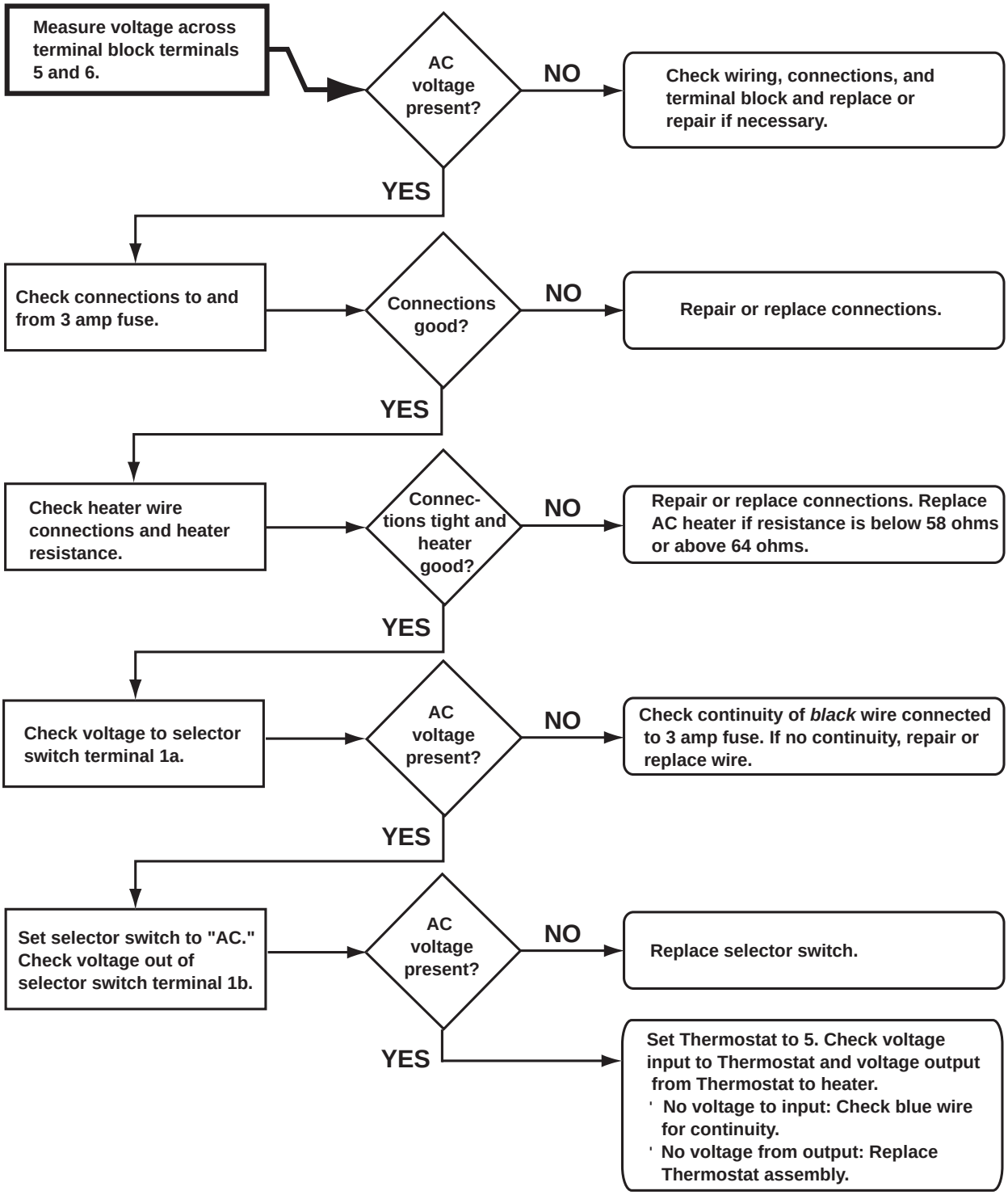

No DC Operation - N500.3 (3-Way Units Only)

Before beginning this procedure make sure:

- The refrigerator is receiving DC power from the RV DC power system.
- Voltage across terminal block connections 7 and 8 is at least 12 Vdc.
- Fuse holder and 25 amp fuse are in good condition.
- Selector switch is set to "DC."

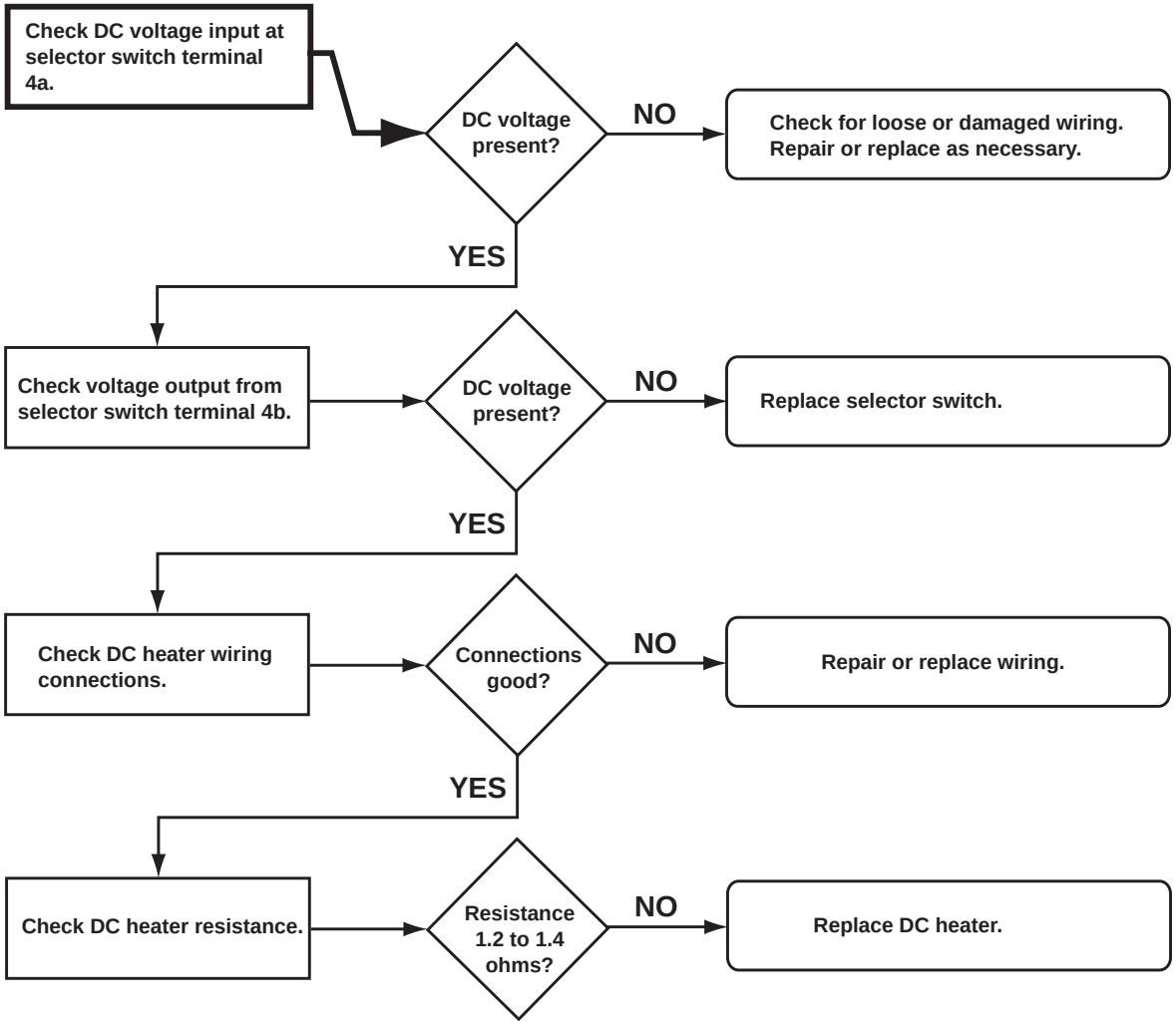

No Gas Operation - N500 Units

Before beginning this procedure make sure:

- The refrigerator is receiving DC power from the RV DC power system.
- All ground connections are clean and making full contact.
- Propane gas is available.
- Propane gas tank valve(s) is open.
- Refrigerator gas valve is open.
- Propane gas pressure is between 10.5 and 11.5 in. water column.

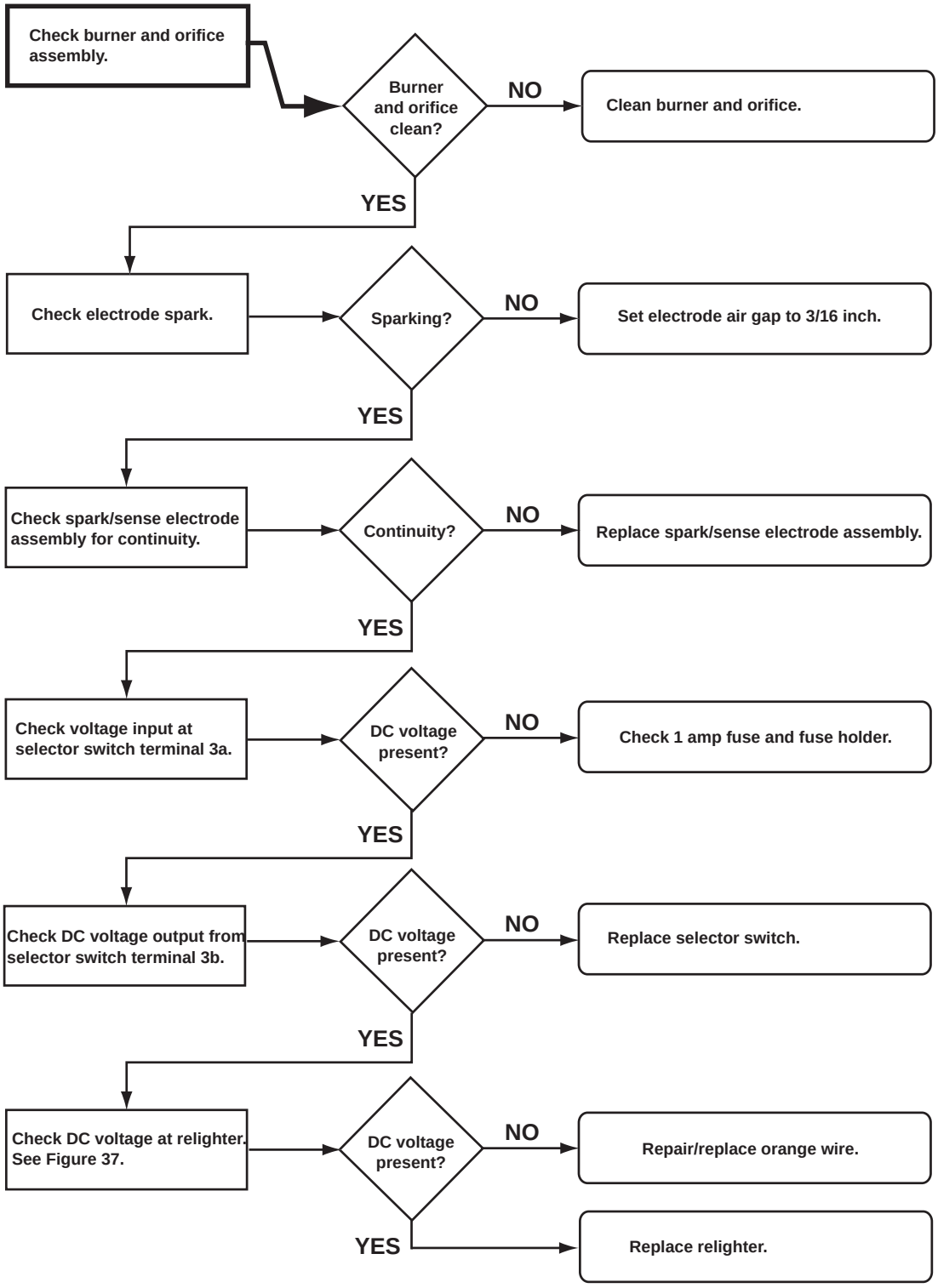

Thermocouple and Interrupter Malfunctioning - N500 Units

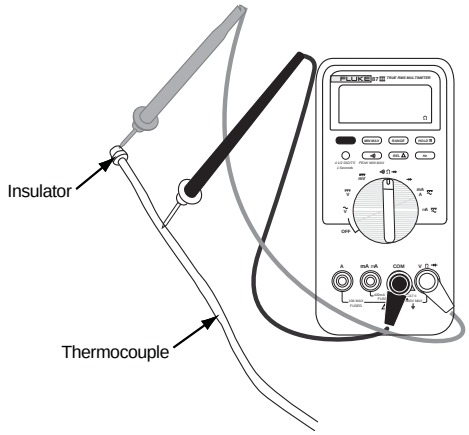

Figure 4. Checking thermocouple voltage output to interrupter

The following procedure and troubleshooting chart check the operation of the thermocouple and the interrupter.

Interrupter Voltage Output Check

1. Remove refrigerator from enclosure.
2. Remove upper shroud (four screws).
3. Connect an alternate gas supply. Gas pressure must be between 10.5 and 11.5 in. water column.
4. Set selector knob to LP GAS operation.
5. Set temperature control knob to 5.
6. Connect voltmeter as shown in Figure 4. Do not disconnect wires from interrupter.
7. Press and hold gas safety valve and turn selector knob to LP GAS to ignite burner. Hold the valve open to maintain the flame lit while following procedure below.

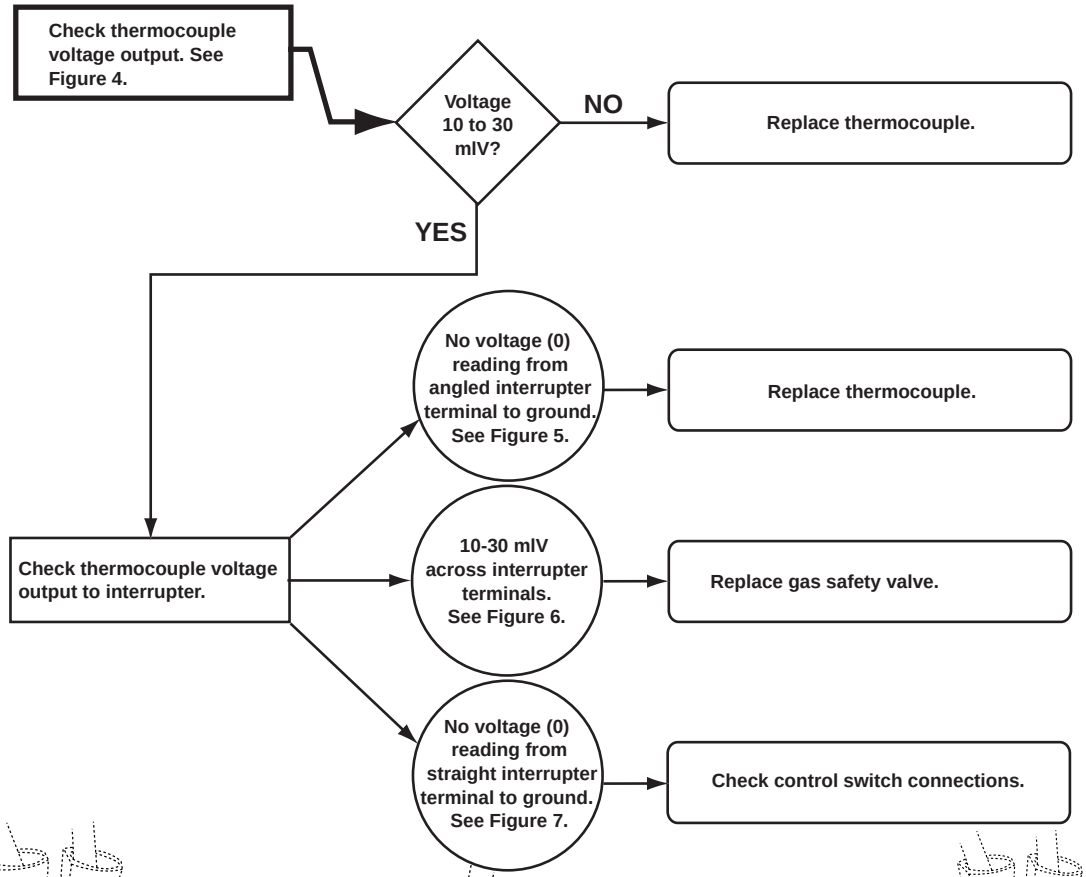

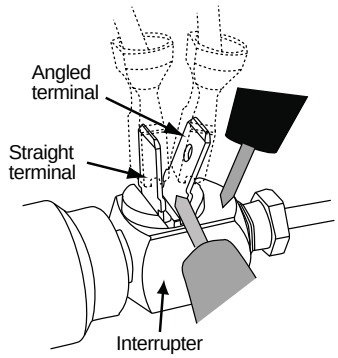

Figure 5. Checking angled terminal to ground

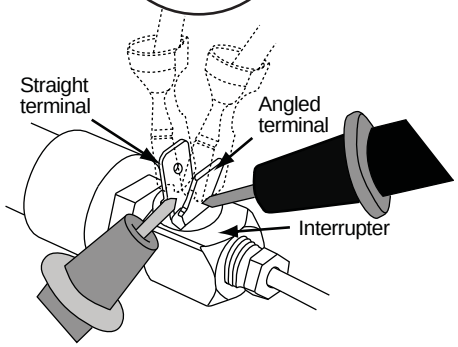

Figure 6. Checking voltage across terminals

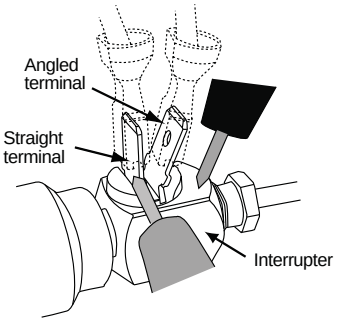

Figure 7. Checking straight terminal to ground

Blank Display - Refrigerator does not turn on - N41X/N51X

Verify:

- The DC power system of the vehicle is supplying 10.5 - 15.4 volts to the refrigerator.
- No other RV appliances or lighting circuits are connected to the refrigerator DC circuit.
- 12 volt DC input to the refrigerator power board is wired according to the Installation Manual.
- There are 10.5 - 15.4 volts DC between power board connections 12VDC and GND1.
- The 5 amp fuse (F1) on the power board is intact. If not, replace fuse.

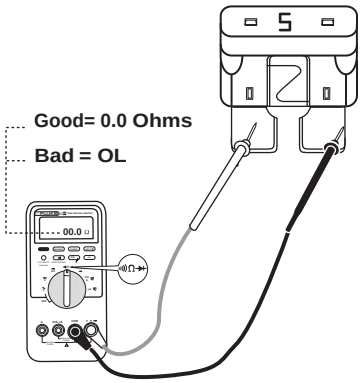

Figure 8. Checking DC fuse continuity

Optical Display Does Not Turn On - Power is available - N41X/N51X

Verify:

- There is 10.5 - 15.4 volts DC between power board terminals 12VDC and GND1. If not, correct DC input to power board.
- There is 10.5 - 15.4 volts DC between the white / red wire and the white / violet wire of the optical control wire harness connector.
- The 5 amp fuse (F1) on the power board is intact. If not, replace fuse.
- There is 10.5 - 15.4 volts DC between the white / red wire and the white / violet wire of the power board wire harness connector. If not, replace power board.
- While pressing and holding the ON/OFF button, there are 10.5 - 15.4 volts DC between the blue and the white / violet wires at the optical display connector. If the connectors and the terminals are secure and undamaged, replace the optical control display assembly.
- After releasing the ON/OFF button, there are 10.5 - 15.4 volts DC between the green wire and the white/violet wire of the wire harness optical display connector. If not, replace power board.
- That the optical display LED is illuminated, If not, replace the optical control display assembly.

On-Off Theory of Operation - N41X / N51X

Continuous 12-Volts (See Figure 8A)

12VDC is supplied to the refrigerator at Power Board terminals 12VDC & GND [A]. This 12VDC travels through the Power Board to fuse F1 [B] and then out to P1-6 [C]. Via the green wire, the 12VDC exits the Power Board and enters the Display Board at P1-1 [D]. 12VDC travels onto P2-1 of the Display Board and into the ribbon cable of the overlay and on out to one side of the On-Off switch [E] (The On-Off switch is one of three “normally open” membrane switches housed within the overlay). This 12VDC is referred to as the continuous 12-volts because it is always present at the one side of the On-Off switch when the 12VDC is applied to the refrigerator.

Switched 12-Volts (See Figure 8B)

Pressing the On-Off switch [E] will allow 12VDC to pass through the On-Off, out through the ribbon cable connection at P2-5, and on out to the blue wire [F] connected between the Display Board at P1-3 [G] and the Power Board at P2-3 [H]. Once the 12VDC reaches the Power Board, a signal is sent out to the coil of relay K3 [J] via the U1 microprocessor. This signal allows the K3 relay to energize thus closing the normally open contacts [K].

NOTE

K3 is a latching relay. Once the relay coil is energized the contacts close and remain closed even when the 12VDC is removed, hence the term “latching relay”. With the K3 contacts now closed, 12VDC is passed back to the Display Board via the white-red wire [L] between P1-9 of the Power Board and P1-2 [M] of the Display Board. This 12VDC will remain at P1-2 [M] until the latching relay is “unlatched”, which will not take place until the On-Off button is depressed again. This 12VDC is termed the switched 12-volts and is used to power on the display.

NOTE

The On-Off switch [E] is a momentary push-button switch. The operation described above takes place during the “split second” the On-Off button is depressed to power the refrigerator on. If for some reason the display does not turn on, the On-Off button can be pushed and held down to aid in troubleshooting. EXAMPLE: Verify you have 12VDC between P1-1 (GND) and P1-6 (continuous 12-volts) of the Power Board. Leave the meters black ground lead connected to P1-1 and move the red positive lead from P1-6 to P2-3 of the Power Board. Have someone press and hold the On-Off button. You should measure 12VDC as long as the On-Off button is held in. When the On-Off button is released you should see the 12VDC go away.

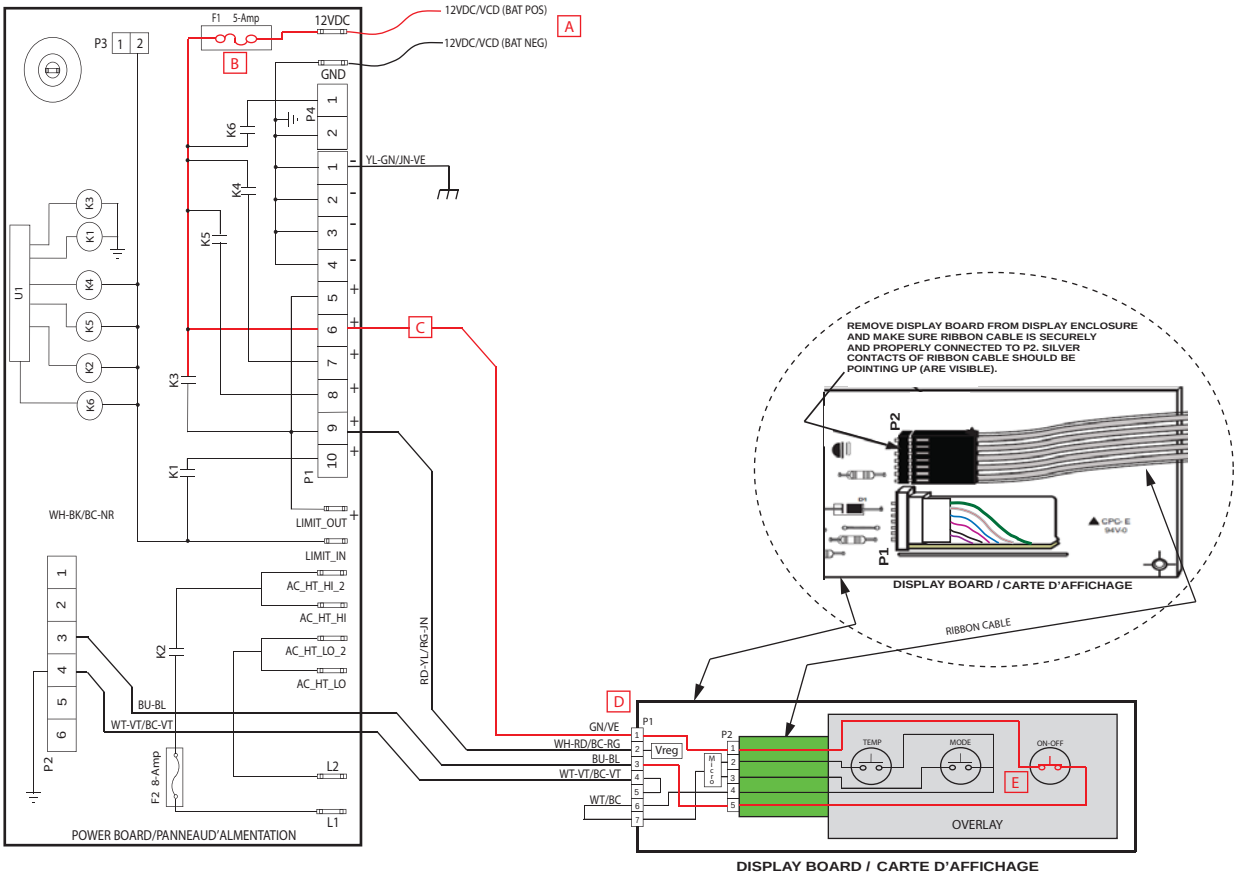

Figure 8A. Continuous 12 -Volts

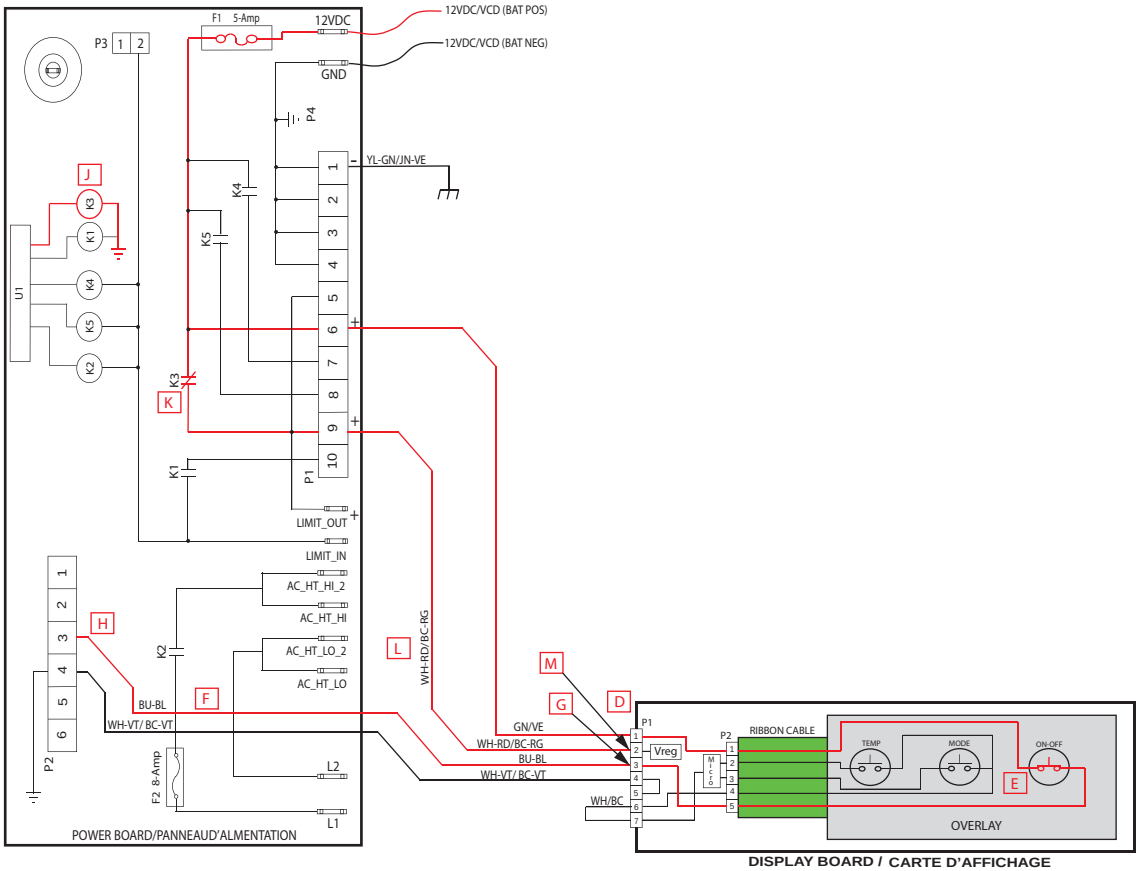

Figure 8B. Switched 12-Volts

"F" Fault Code - Burner failed to ignite or reignite - N41X/N51X

Before beginning this procedure make sure:

- RV propane gas tank valve(s) is open.
- Refrigerator solenoid gas valve manual shutoff is open.
- Propane gas pressure at the solenoid gas valve pressure tap is 10.5 to 11.5 inches water column.

Fault indicator displayed:



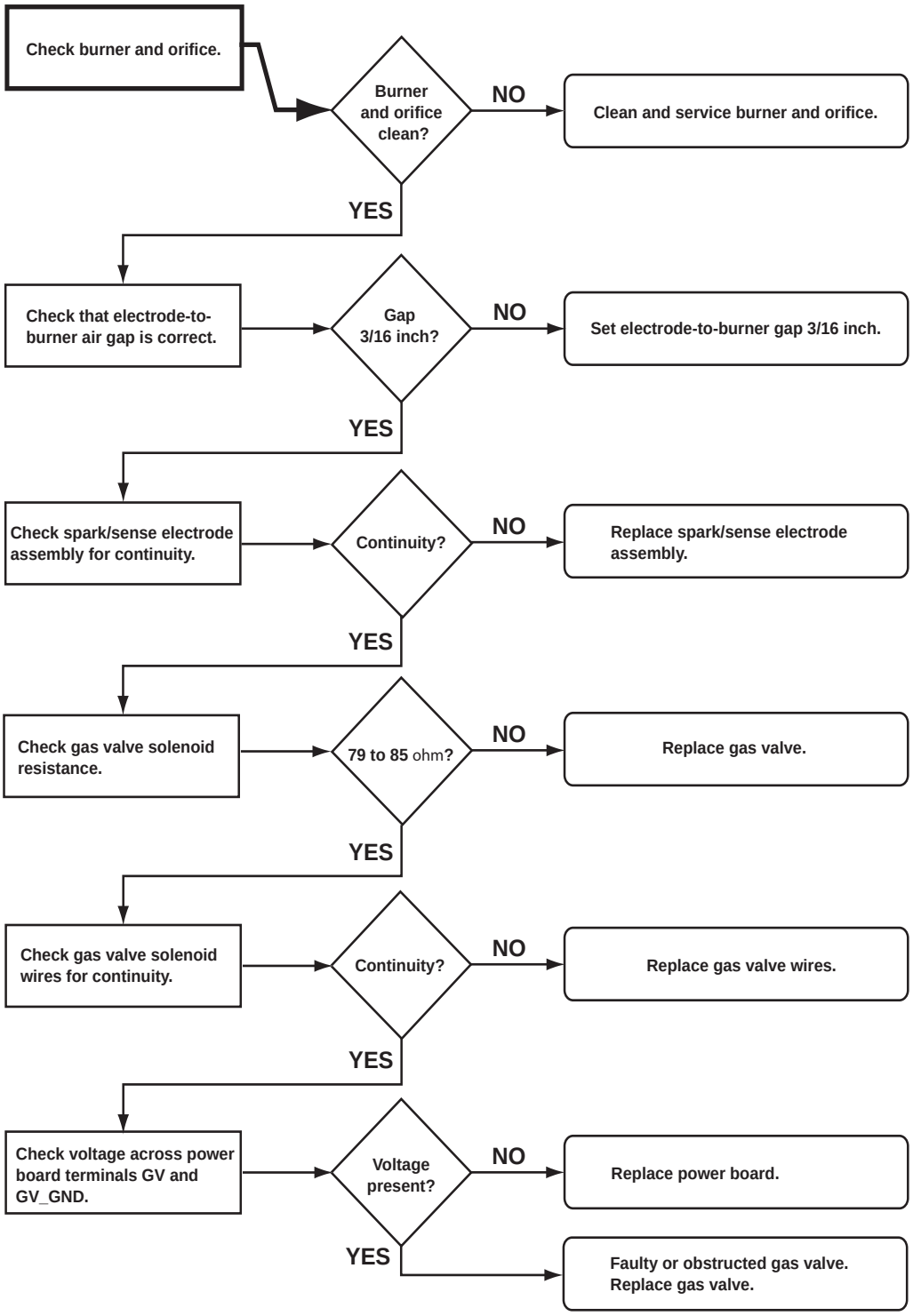

"E" Fault Code - DC voltage high - N41X/N51X

Before beginning this procedure:
- Make sure the RV DC voltage to the refrigerator is between 10.5 and 15.4 volts.
- Determine if the "E" fault code displays when the converter is the source of DC power.

Fault indicator displayed.



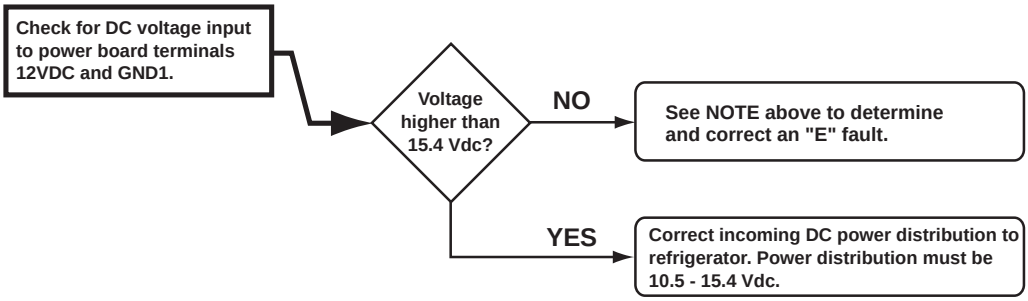

NOTE

Electronic controls operate on 12 Vdc. When an AC/DC converter is used to supply DC power, the refrigerator circuit must be connected to the appliance output terminals of the converter (filtered side).

If the refrigerator circuit is connected to the unfiltered side, the AC ripple generated by the converter may cause an "E" or "C" fault code to display.

To troubleshoot an "E" or "C" fault, connect a charged 12 volt automotive battery to the power board. If the "E" or "C" code clears, the fault was caused by unfiltered DC power. If the "E" or "C" code does not clear, replace the power board (see page 45).

"C" Fault Code - DC voltage low - N41X/N51X

Before beginning this procedure:
- Make sure RV DC voltage to refrigerator is 10.5 to 15.4 volts.
- Determine if the "C" fault code displays when the converter is the source of DC power.

Fault indicator displayed.



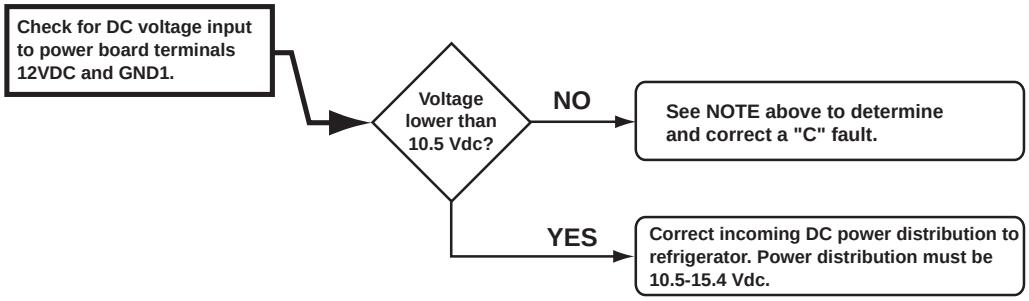

"A" Fault Code - No AC power available - N41X/N51X

Before beginning this procedure make sure:
- No other problem exists with the RV AC power supply.
- No other appliances or lighting circuits are connected to the refrigerator AC circuit.
- Extension cords are not being used to supply AC power to the refrigerator.

Fault indicator displayed:



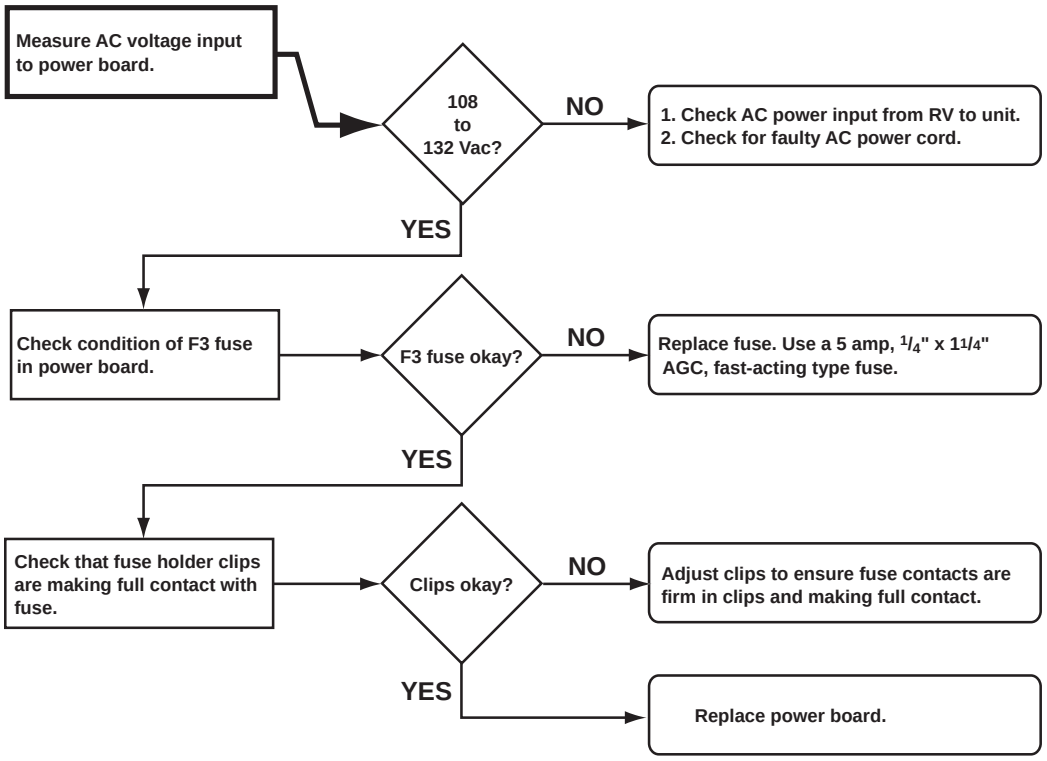

"S" Fault Code - Flame sense circuit failure - N41X/N51X

Fault indicator displayed:





"H" Fault Code - AC heater failed open - N41X/N51X

Before beginning this procedure make sure:
- RV AC voltage to the refrigerator is 108 to 132 volts.
- No other appliance or lighting circuit is connected to the refrigerator AC circuit.

Fault indicator displayed:



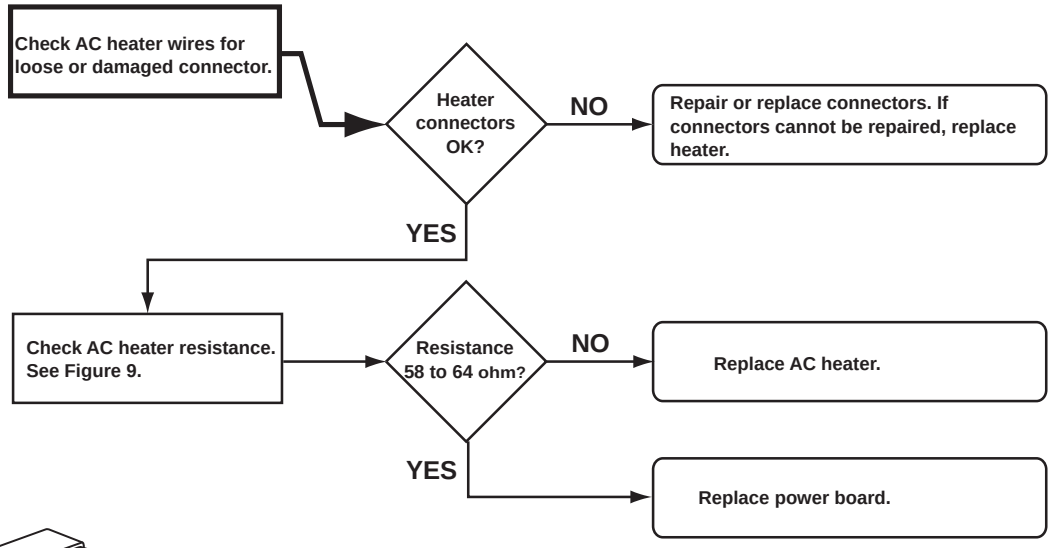

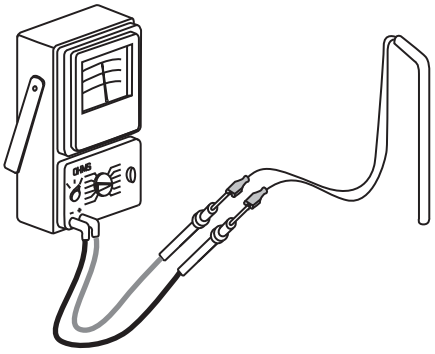

AC heater resistance 58 to 64 W.

Figure 9. Measuring AC heater resistance

"r" Fault Code - AC relay stuck closed - N41X/N51X

Fault indicator displayed:





Thermistor Failure Fault - Controls in Backup Operating System Mode - N41X/N51X

Before beginning this procedure:

- Make sure thermistor assembly is connected to the wire harness.

Fault indicator displayed:

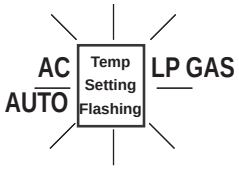

Check thermistor wire assembly and connector for dirty/broken connections. Thermistor connectors are located in P1 connector terminals 8 and 13.

Wires and connector good?

NO → **Clean/repair terminals or connector as required.**

YES → **Check thermistor resistance. See Figures 10 and 11. If resistance is not within specified ranges, replace thermistor.**

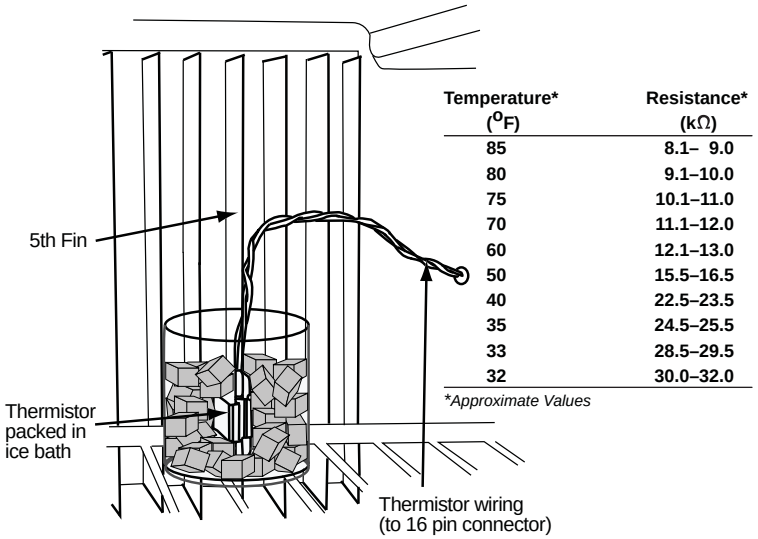

Temperature* (^{O}F)	Resistance* (kΩ)
85	8.1– 9.0
80	9.1–10.0
75	10.1–11.0
70	11.1–12.0
60	12.1–13.0
50	15.5–16.5
40	22.5–23.5
35	24.5–25.5
33	28.5–29.5
32	30.0–32.0

**Approximate Values*

Figure 10. Thermistor assembly

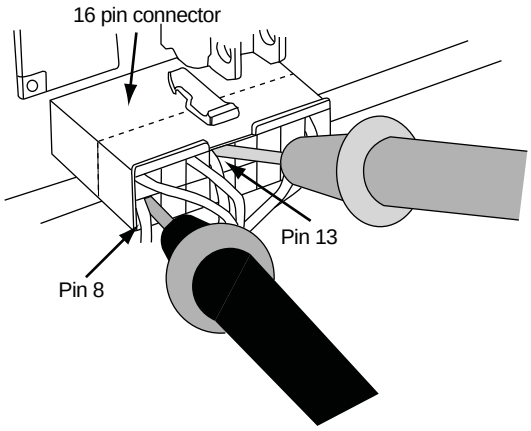

Figure 11. Checking thermistor resistance

Backup Operating System - N41X/N51X Models

The backup operating system (BOS) is an electronically controlled duty cycle. It maintains the refrigerator in operation if the thermistor is disconnected or fails. The BOS maintains cooling by controlling the heat source selected. When the refrigerator is operating in BOS, the length of the cooling cycle is regulated not by temperature, but by time.

To accomplish this, the BOS adjusts the length of the cooling cycle according to the temperature setting selected by the user-the higher the temperature setting, the longer the cooling cycle. For example, if the temperature setting is set to 4, raising the setting to 5 will lengthen the cooling cycle, making the cabinet colder.

When a warmer temperature is desired, changing the temperature setting to a lower number shortens the cooling cycle. For example, if the temperature setting is set to 5, lowering the setting to 4 will shorten the cooling cycle.

When the N41X/N51X controls shift to BOS operation, the temperature setting flashes for ten seconds when the TEMP button is pressed. After ten seconds, the selected operation mode indicator displays.

"N" Fault Code - No cooling detected by the controls - N41X/N51X

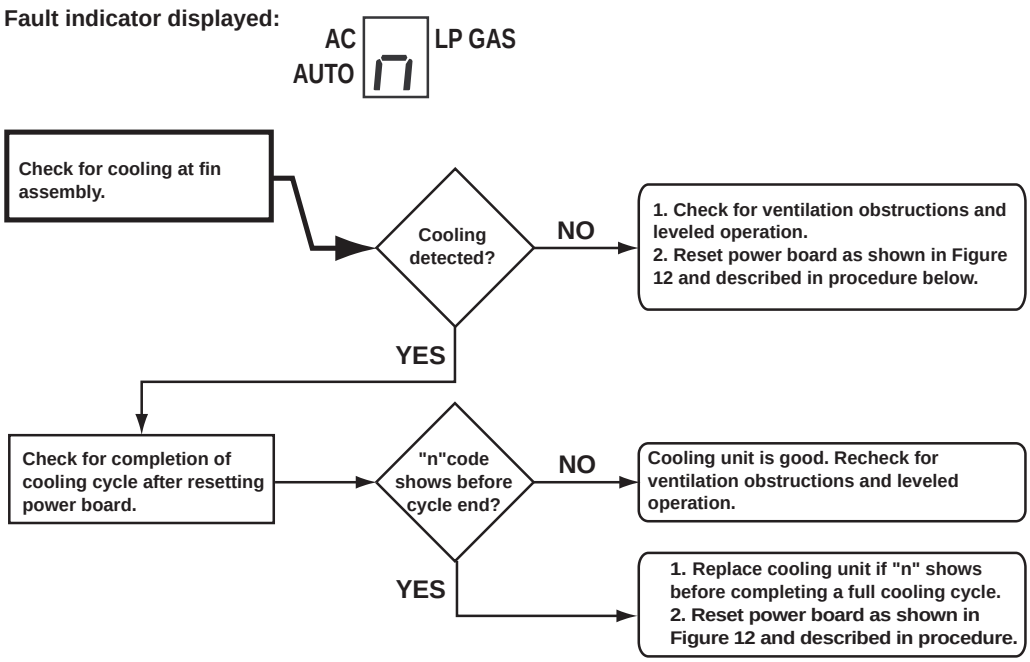

Power Board Resetting Procedure

1. Turn OFF the refrigerator.
2. Disconnect the following from power board:
   a. 12 VDC positive and negative wires.
   b. AC power cord.
   c. Solenoid gas valve wires.
   d. Spark/sense electrode assembly wires.
3. Remove the power board cover.
4. Reconnect 12 VDC positive and negative wires.
5. Turn ON the refrigerator.
6. Locate Pin 15 on 16 pin connector (P1). Pin 15 is the empty socket to the right of the white/violet wire on the top row. See Figure 12.
7. Using an insulated jumper wire, short Pin 15 to the power board ground lug for 10 - 15 seconds. A click sound will indicate when the controls are reset. See Figure 12.

NOTE

A jumper wire to short Pin 15 to ground can be made from a six inch long insulated 22 AWG wire with a 1/2 inch of insulation stripped from each end.

8. Turn OFF the refrigerator.
9. Turn ON refrigerator. If "n" code displays, repeat steps 7 - 9.
10. Turn OFF the refrigerator.
11. Disconnect the 12 VDC power positive and negative wires from the power board.
12. Install the power board cover.
13. Reconnect the following to the power board:
    a. Spark/sense electrode assembly wire.
    b. Solenoid gas valve wires.
    c. AC power cord.
    d. 12 VDC positive and negative wires from the power board.
14. Place refrigerator in service.

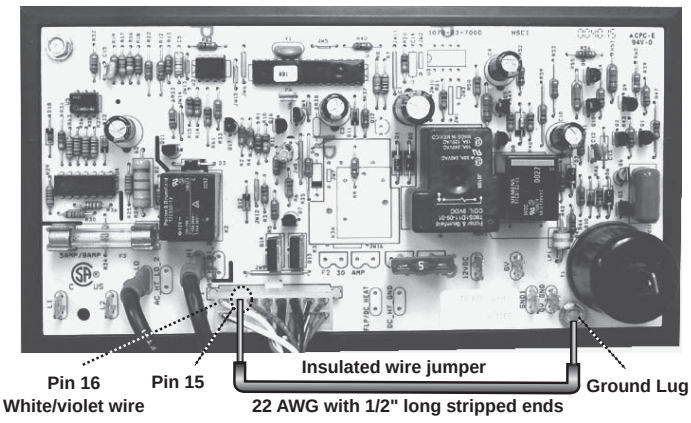

Figure 12. Resetting the power board

Roof Exhaust Venting

NOTE

The general guidelines for intake vents and roof exhaust vents presented in this section do not replace the instructions and/or guidelines provided in the *N41X/N51X Installation Manual* and the *Ventilation Guidelines for Gas/Electric Refrigerators*. Refer to the *N41X/N51X Installation Manual* and *Ventilation Guidelines for Gas/Electric Refrigerators* for the latest information on approved vents, installation instructions, and special construction exceptions.

Illustrations of different venting applications are shown in Figure 13 and Figure 14.

Air Intake Vent

The ventilation and combustion air flows into the enclosure through the air intake vent.

The space between the air intake vent and the rear of the refrigerator must be kept clear at all times. Any obstruction in this area may cause serious ventilation problems. The air intake vent opening also provides access for servicing cooling unit components.

Roof Exhaust Vent

The heat absorbed by ventilation air and combustion gases flow out of the enclosure through the roof exhaust vent.

The roof exhaust vent is equipped with a non- removable metal mesh screen that prevents leaves, debris, birds or rodents from getting into the enclosure. The roof cap is fastened to the exhaust vent with four screws. The cap is always installed with the slope towards the front of the RV.

Baffles

The minimum and maximum clearances for installing the refrigerator or correcting ventilation problems on roof vented units are listed in Table 1. Baffles are required whenever installations exceed maximum clearances listed in Table 1. Figure 13 and Figure 14 show baffle locations.

Vertical Angled Baffles

Vertical angled baffles are required when the roof exhaust vent is installed inboard of the condenser. Figure 14 shows the angled vertical baffles required on inboard roof vent installations. The horizontal wall baffles are required whenever the distance between the cooling unit and the interior surface of the outside wall exceeds one inch.

	Minimum	Maximum
Bottom	0 inch	0 inch
Sides (each)	0 inch	1/8 inch
Top	0 inch	1/4 inch
Rear	0 inch	1 inch

Table 1. Clearances for roof vented installations

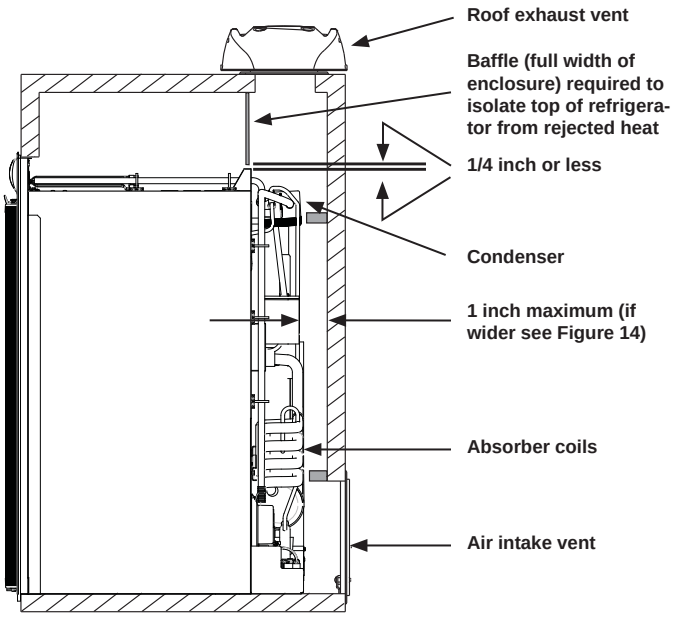

Art01638-1

Figure 13. Roof vented ventilation arrangement

Double Sidewall Venting

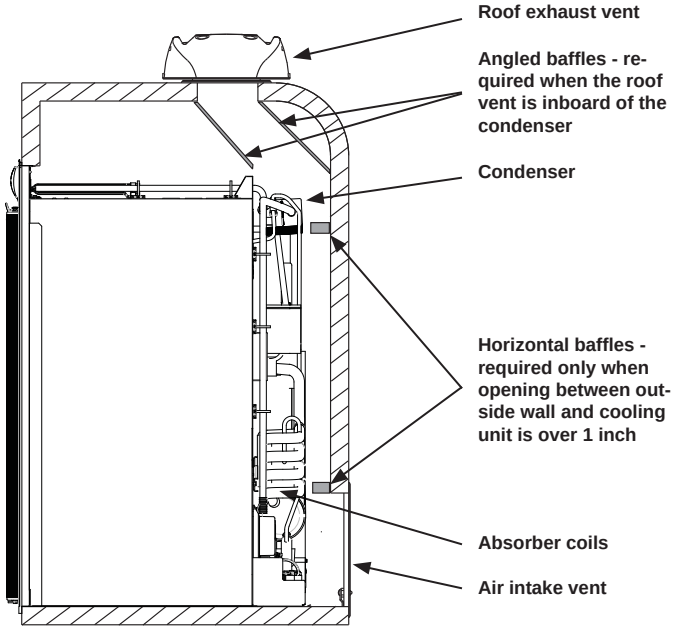

Art01639-1

Figure 14. Roof vented ventilation with roof vent inboard of condenser

Because of increased installation of refrigerators in RV slide outs, NORCOLD has developed venting guidelines for double sidewall vent applications. This ensures NORCOLD refrigerators meet the ANSI Z21.19 standards for cooling performance when used in slide out applications.

The challenge with slide out installations is that the "chimney effect" (see Cooling Unit section) that is present with roof vent installations is not as strong in slide outs. To improve the airflow of the chimney effect, side vent installations must have fans and baffles. These fans and baffles direct the air flow through the surfaces of heat rejecting components. NORCOLD has determined that the following four key design considerations optimize heat removal in slide out applications.

- Refrigerators installed in slide outs must have a fan or fans to assist air flow. Fan kits are available through NORCOLD.
- Fresh air must be directed to flow through the surface areas of the absorber coils, condenser fins, and the outer surface of the canister.
- Corners and structural pockets where heated air may stagnate must be reduced in size or completely eliminated.
- N41X refrigerators must have at least 41 3/4 inches distance between the upper exhaust vent and the lower intake vent.
- N500/N51X refrigerators must have at least 47 3/4 inches distance between the upper exhaust vent and the lower intake vent.

Two baffles are required for the double sidewall venting applications.

Double sidewall venting examples are shown in Figures 15 and 16.

Air Intake Vent

The ventilation and combustion air flow into the enclosure is through the air intake vent.

Sidewall Exhaust Vent

The heat absorbed by ventilation air and combustion gases flow out of the enclosure through the sidewall exhaust vent.

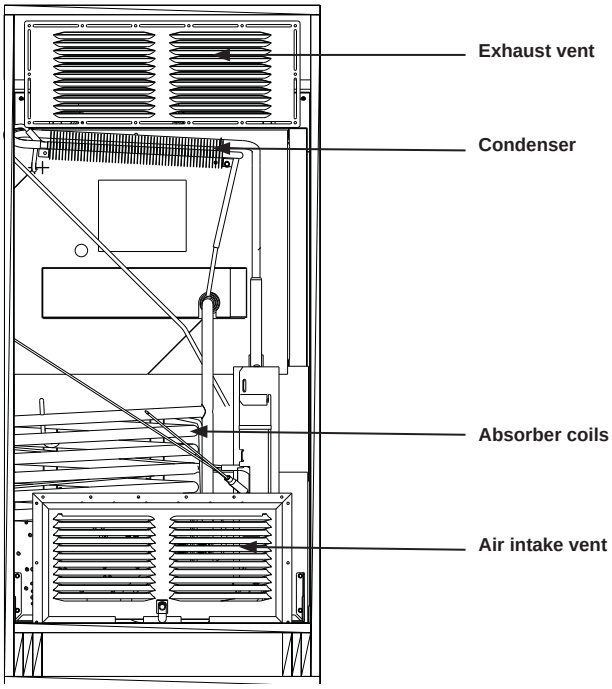

Figure 15. Double sidewall ventilation arrangement

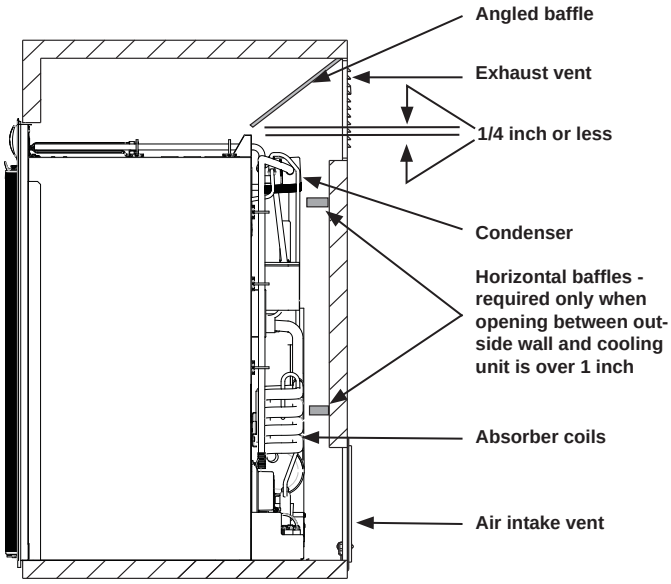

Figure 16. Baffles required for sidewall venting

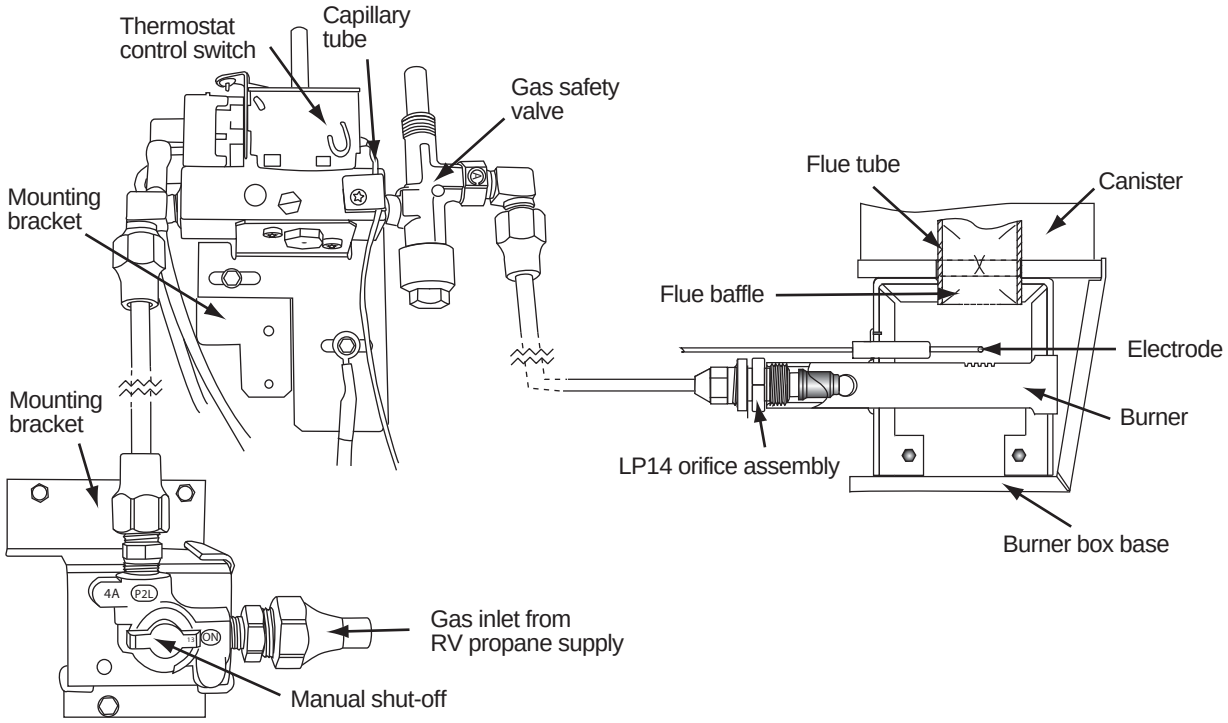

Figure 17. N500 propane gas system components

Components

Manual Shutoff Valve

The manual shutoff valve controls the flow of propane gas from the RV propane supply to the gas valve-thermostat assembly. See Figure 18.

Orifice

> ***WARNING:*** **Do not** separate the orifice from its threaded adaptor! The orifice and its adaptor are a sealed assembly. Separating the orifice from the threaded adaptor can cause propane gas leakage. A propane gas leak can ignite and cause an explosion and/or fire which could result in substantial property damage, burn injury, or death.

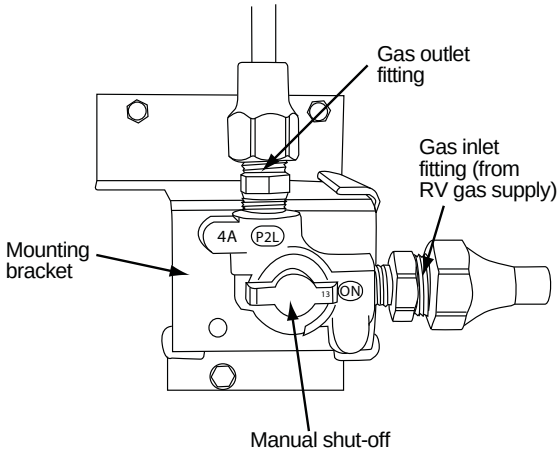

Figure 18. N500 manual shutoff valve

The orifice meters the flow of gas to the burner. The N500 model requires the LP14 orifice. See Figure 19. A restricted, clogged, or damaged orifice will affect the burner's heat output, which in turn affects the performance of the cooling unit when the refrigerator is operating on propane gas. The orifice should be checked and cleaned annually to maintain the propane gas combustion system at peak performance. It should also be checked before and after seasonal storage, and before the recreational vehicle is placed in service. See "Burner Cleaning" section for more information on cleaning the burner and its components.

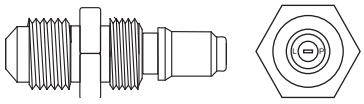

Figure 19. LP14 orifice

Gas Safety Valve

The gas safety valve is mounted on the control panel in the gas valve-thermostat assembly. See Figure 17. This valve is designed to stop the flow of propane gas to the burner when a flame failure occurs. Its operation is controlled by the thermocouple, which connects directly to the gas valve's interrupter. During the ignition process, the valve button must be held in (open) until a flame is established at the burner.

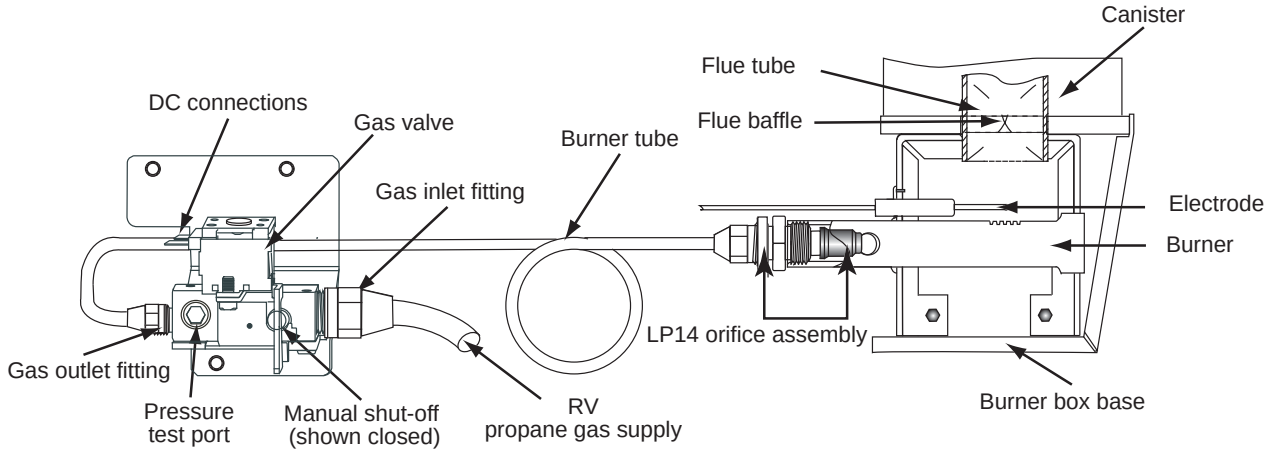

Figure 21. N41X/N51X propane gas system components

Components

Solenoid Gas Valve

The solenoid gas valve, shown in Figure 22, controls the flow of gas from the RV gas supply to the burner. Integrated in the valve's body are a manual shutoff and pressure tap. The valve's manual shutoff is a spring-loaded, quarter turn, manually operated valve.

To manually shut off gas to the burner, pull the handle slightly away from the body of the valve, then turn it one-quarter turn (90 degrees) counterclockwise.

The solenoid gas valve inlet fitting is 3/8 inch, male threads; the outlet fitting is 1/4 inch, male threads.

Orifice

> ***WARNING:*** **Do not** separate the orifice from its threaded adaptor! The orifice and its adaptor are a sealed assembly. Separating the orifice from the threaded adaptor can cause propane gas leakage. A propane gas leak can ignite and cause an explosion and/or fire which could result in substantial property damage, burn injury, or death.

The orifice meters the flow of gas to the burner. The N41X/N51X models require the LP14 orifice. See Figure 23. A restricted, clogged, or damaged orifice will affect the burner's heat output, which in turn affects the performance of the cooling unit when the refrigerator is operating on propane gas. The orifice should be checked and cleaned annually to maintain the propane gas combustion system at peak performance. It should also be checked before and after seasonal storage, and before the recreational vehicle is placed in service. See Burner Cleaning for more information on cleaning the burner and its components.

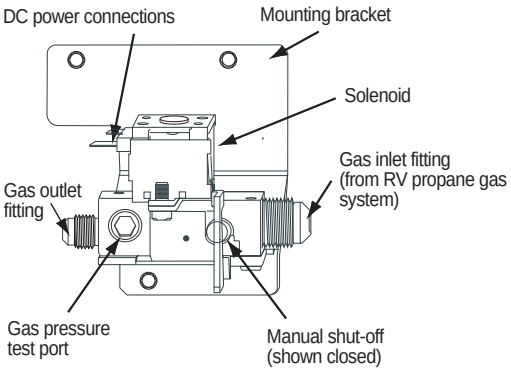

Figure 22. N41X/N51X solenoid gas valve

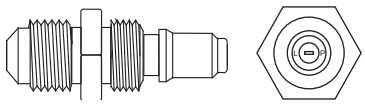

Figure 23. LP14 orifice

Components Continued - All Models

Burner

A five slot burner is the combustion chamber for the propane gas. Poor or no cooling while operating on propane gas can usually be traced to a dirty, clogged, or damaged burner. In most instances, a weak or erratic flame indicates the burner and orifice need service. The burner flame appearance should always conform to the pattern shown in Figure 24. To check burner performance:

1. Set the thermostat knob to 5.
2. Start and operate the refrigerator on propane gas.

> ***CAUTION:*** The burner box cover and inspection port cover may be hot. To prevent burns, wear gloves and exercise extreme care when working on the burner cover or opening and closing the burner box inspection port cover.

3. Open the burner box inspection port. Refer to Figure 24 for flame appearance guidelines.

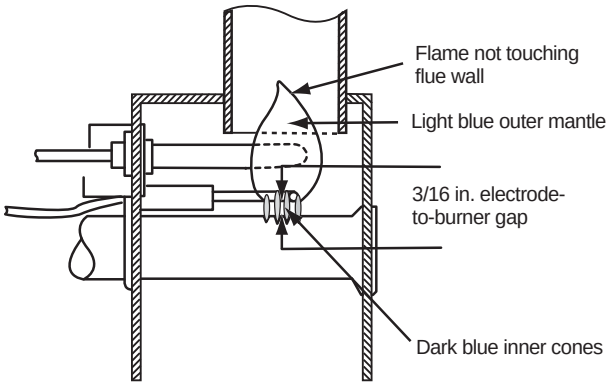

Figure 24. Gas flame appearance.

Flue Tube

The flue tube channels hot exhaust gases towards the exhaust vent. It should be cleaned annually to maintain the combustion system at peak performance.

Flue Cap

The flue cap maintains a slight back pressure of hot combustion exhaust gases in the flue tube. This slight back pressure helps to establish and maintain a good draft of ventilation air through the cooling unit.

Flue Baffle

The flue baffle is located inside the flue tube and helps distribute the heat to the generator section of the cooling unit. The flue baffle must never be permanently removed. The flue baffle should be cleaned annually to maintain the combustion system at peak performance.

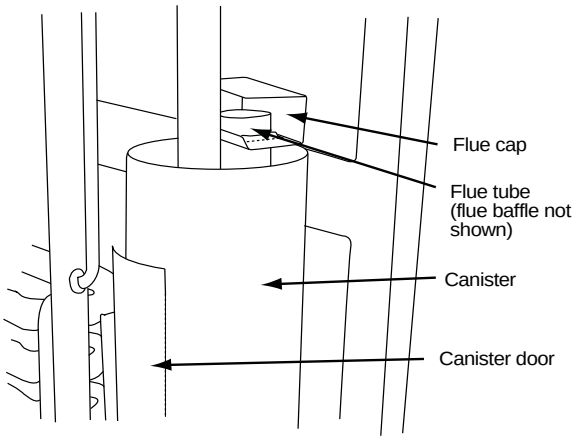

Figure 25. Flue and components

> ***CAUTION:*** Flue and components may be hot. Allow flue to cool before servicing.

To remove the flue baffle for cleaning:

1. Remove the flue cap (see Figure 25).
2. Unclip the baffle retaining wire from the rim of the flue tube.
3. Pull the baffle out of the flue tube.

Handling of Propane Gas Lines and Fittings

Loosen and tighten all connections using two wrenches. Insufficient or excessive force when tightening fittings can result in loose joints or deformed joint parts. Either condition can result in propane gas leakage.

> ***WARNING:*** When working on or near the propane gas system:
>
> - **Do not** smoke or light fires! Extinguish all open flames!
> - **Do not** use an open flame to leak test any of the propane gas system components. Propane gas is highly flammable and explosive.
> - **Do not** connect the refrigerator directly to the propane gas tank. Always use an approved pressure regulator between the propane gas tank and the refrigerator propane gas system.
> - Always use two wrenches to tighten or loosen connections to prevent damage to connections, piping, and components. Damaged connections, piping, and components create the potential for gas leaks.

WARNING: When working on or near the propane gas system:

- Always check for gas leaks after completing service or repairs to the gas system. A propane gas leak can ignite and/or explode, which can result in extensive property damage, serious personal injury or death.
- Check that all tubing is free of dents or kinks.
- **Do not** alter tubing radius.
- When disconnecting propane gas lines, make sure the main propane gas valve at the tank is closed.

Propane Gas Pressure

Propane gas pressure must be supplied and maintained between 10.5 and 11.5 in. water column.

Testing for Gas Leakage

WARNING: **Do not** allow the leak detecting solution to wet or come in contact with electrical components. Leak detecting solutions are electrically conductive and can create a potential shock hazard, electrical shorts, and/or fire.

Before connecting the refrigerator to the RV propane gas supply line:

The ANSI 119.2 Standard on Recreational Vehicles requires that the gas piping be proven leak free by testing before the refrigerator is connected to the propane gas system. This standard requires that the system maintains at least 3 psi for a period of 10 minutes. Before this test is administered, the temperature of the piping system must be approximately the same throughout the system and a uniform temperature shall be maintained throughout the test period. The test can be conducted using air pressure and one of the following methods:

Method A:

1. Connect a mercury manometer, slope gauge, or equivalent measuring device to the propane gas system.

NOTE

The measuring device used must be calibrated so it can be read in increments no greater than 1/10 psi.

2. Pressurize the system to 3 psi then shut off the air supply valve. The system must maintain 3 psi for 10 minutes.

Method B:

1. Apply a bubble type leak detector solution between the source of air pressure and the piping system.
2. Pressurize the system to 3 psi then shut off the air supply valve.
3. Check for air bubbles indicating leaks.

After refrigerator has been connected to the RV propane gas supply line:

The ANSI 119.2 Standard on Recreational Vehicles requires that the gas piping be proven leak free by testing after the refrigerator is connected to the propane gas system. The propane gas connection to the refrigerator can be leak tested using commercially available bubble leak test solution, soap and water, or by performing a pressure drop test (explained at below).

CAUTION: Do not use any liquid detergents that contain ammonia or chlorine for testing. These substances can corrode brass components.

Bubble leak test solution/soap and water leak test:

To test the propane gas connections for gas leakage using a commercially available leak test solution or soap and water solution:

1. Pressurize the propane gas system between 10.5 in. water column and 11.5 in. water column.
2. Apply the bubble leak detection solution using a small brush or spray applicator.
3. Repair all gas leaks observed and retest for gas leakage after completion of repairs.

Pressure drop test:

A pressure drop test requires the use of a manometer or calibrated gauge to indicate any drop of system pressure due to leakage. In order to pass the pressure drop test, the system must maintain pressure over a period of 3 minutes. The guidelines to perform a pressure drop test are below.

1. Connect a manometer or pressure gauge to the refrigerator propane gas system pressure tap.
2. Pressurize the propane gas system between 10.5 in. water column and 11.5 in. water column.
3. Make sure the temperature of the piping system is approximately the same throughout and maintain uniform temperature throughout the test period.
4. Close the shutoff valve at the refrigerator.
5. Close the shutoff valve at the propane gas tank(s).
6. The propane gas system must maintain water column pressure over a period of 3 minutes.

Burner Cleaning Procedure

> ***WARNING:*** **Burn hazard!** Allow the burner box and burner components to cool before attempting to service the burner assembly or components.

1. Turn OFF refrigerator.
2. Close the propane gas tank valve(s).

For Steps 3 - 5, refer to Figure 18 (N500), or Figure 22 (N41X/N51X).

3. Close the gas valve manual shutoff.
4. Remove the drip cup retaining screw, then remove the drip cup.

> ***CAUTION:*** To prevent damage to connections, piping, and components, always use two wrenches to loosen the burner tube. A damaged burner tube creates a potential for gas leaks.

5. Remove the burner box cover retaining screw, then slide the burner box cover out of the way.

For Steps 6 - 8, refer to Figure 17 (N500), or Figure 21 (N41X/N51X).

6. Disconnect the burner tube from the orifice assembly.
7. Remove the orifice assembly from the burner.
8. Remove the burner retaining screw.
9. Remove the burner from the burner box frame.
10. Clean the burner.

NOTE

The burner slots may be cleaned with a small flat file. The inner bore of the burner body may be cleaned with a 3/16 in. double-spiral wire brush. Do not damage the threads when cleaning the inner bore of the burner.

> ***WARNING:*** Do not insert any type of cleaning tool or wire into the orifice. Do not drill or ream the orifice opening to clean it. Insertion of any type of cleaning tools, reaming, or drilling through the opening will alter the volume of propane gas flow to the burner and create a fire hazard potential.

11. Visually inspect the orifice. If dirty, wash the assembly with alcohol, then allow to air dry. If cleaning fails to remove dirt or if the condition of the orifice assembly is questionable, replace the orifice assembly.
12. Clean dirt or debris from the burner box base.
13. Reinstall the burner. Do not overtighten the retaining screw.

> ***CAUTION:*** To avoid gas leaks and prevent damage to connections, piping, and components, always use two wrenches to tighten the burner tube. A damaged burner tube creates a potential for gas leaks.

14. Install the orifice assembly. Thread the orifice assembly into the burner finger tight, then finish tightening using two wrenches.
15. Connect the burner tube. Thread the fitting finger tight, then finish tightening using two wrenches.
16. Install the burner box cover. Do not overtighten the retaining screw.
17. Install the drip cup.
18. Open the propane gas tank valve.
19. Open the gas valve manual shutoff.
20. Turn ON the refrigerator and select the GAS mode (N500) or Manual Gas Mode (N41X/N51X) operation.
21. Leak test propane gas connections while holding in gas safety valve (N500) or during the 30 second trial-for-ignition (N41X/N51X).

> ***WARNING:*** Do not try to repair gas leaks with the refrigerator in operation. Before attempting to repair a gas leak:
>
> - Turn OFF the refrigerator.
> - Close the propane gas valve and the manual shutoff/ solenoid gas valve manual shutoff.

AC Power

AC Power Requirements - All Models

AC mode operation requires 108 to 132 VAC for AC heater operation. AC power must be supplied through a 2 pole/3 wire/20 amp grounding type receptacle.

> ***WARNING:*** **Do not** cut or remove the ground prong from the power cord. Do not use a two-prong adapter or an extension cord. Connect the AC power cord only to a grounded three-prong type receptacle. Operation of the refrigerator without a ground connection or with a faulty ground connection can result in extensive property damage, injury, or death.

> ***WARNING:*** **Electric shock hazard!** The refrigerator is fed power from more than one source. Unplug the AC cord from the RV AC receptacle before servicing electrical or electronic components.

AC Heater

> ***WARNING:*** **Do not wire the heater(s) direct!** Wiring heater(s) direct bypasses control safety devices and creates the potential for an electrical fire.

The AC heater, see Figure 26, has black leads and is a cartridge type heater. The heater is rated for 200 watts/2.5 amps at 110 Vac. Heater resistance is 61.3 ohms.

AC Fuse

N500 Models

The N500 AC circuit is protected by a 5 A, 1/4 in. x 1 1/4 in. AGC type fast acting fuse housed in an in-line type fuse holder.

N41X/N51X Models

The N41X/N51X AC circuit is protected by a 5 amp fuse located on the left side of the power board. The power board cover must be removed to gain access to the fuse.

When the refrigerator operates with poor or no cooling in AC operation, but operation is present:

a. Measure AC voltage input to the power board.
b. Measure heater amp draw.
c. If amp draw is not as specified, measure the heater's resistance at ambient temperature.

When replacing an AC heater make sure the stop bead rests fully against heater tube rim. See Figure 26.

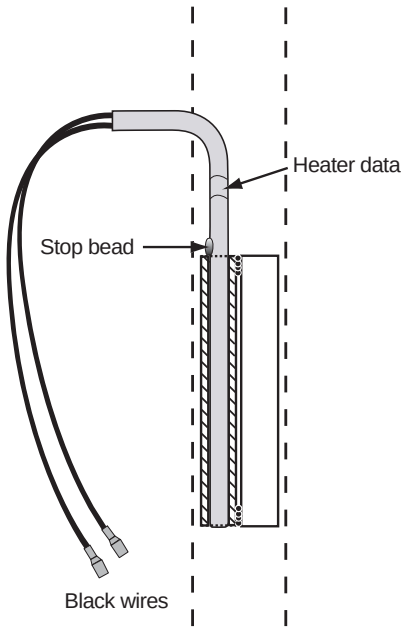

Figure 26. AC heater in heater well

DC Power

DC Power Requirements

N500 (2-way models)

DC operation requires 12 to 15 Vdc power for relighter and ignition circuit. The ignition circuit requires 10.5 to 15.4 Vdc.

N41X/N51X (2-way models)

Electronic controls operate on 10.5 and 15.4 Vdc. A voltage drop below 10.5 Vdc or rise above 15.4 Vdc will cause the controls to set fault codes on the display. The control circuit is protected with a 5 amp automotive type fuse (located on the right side of the power board).

N41X.3/N500.3/N51X.3 (3-way models)

For 3-way models, the controls and ignition circuit operate at 12 to 15 Vdc. The DC heater operates at 13.5 to 15.4 Vdc.

DC Heater - N41X.3/N500.3/N51X.3

The DC heater, which has yellow leads, is shown in Figure 27. The heater is rated for 225 watts/16 amps, and requires 12 to 15 Vdc for operation. Heater resistance is 0.87 ohms.

Relighter - N500/N500.3

The relighter is a potted modular 12 Vdc circuit protected by a 1 amp 1/4 in. x 1 1/4 in. AGC type fast acting fuse housed in an in-line fuse holder. To replace the relighter, see the Relighter procedure.

> ***WARNING:*** Never use undersized wires to supply DC power to the power board. The use of undersized wires can cause low voltage and high amp draw conditions. The high amp draw caused by a circuit using undersized wires will cause the wire to overheat and creates an electrical fire hazard.

2-Way Model Wiring

18 AWG is the minimum AWG size wire that can be used for connecting DC power to 2-way models. The size fuse for overload protection must not exceed 6 amps.

3-Way Model Wiring

The distance between the RV DC power source and the power board DC power connection terminals dictates the AWG size wire that must be used. If the distance from the DC power source is:

- 20 feet or less – 10 AWG or a larger gauge wire must be used. The size fuse for circuit overload protection must not exceed 30 amps.
- Over 20 feet – AWG 8 or larger wire gauge must be used. The size fuse for circuit overload protection must not exceed 40 amps.

DC Heater–3-Way Refrigerators Only

> ***WARNING:*** **Do not wire the heater(s) direct!** Wiring heater(s) direct bypasses control safety devices and creates the potential for an electrical fire.

When refrigerator is in DC operation and does not maintain refrigeration and ventilation is correct:

a. Measure DC voltage input to the power board.
b. Measure the heater's amp draw.
c. If amp draw is not as specified, measure the heater's resistance at ambient temperature.

The DC heater must be inserted into the heater tube until the stop bead makes full contact with the tube's rim. The stop bead is shown in Figure 27.

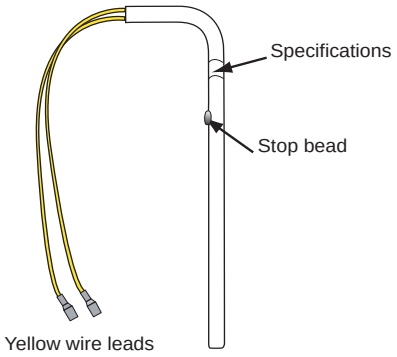

Figure 27. DC heater

DC Heater Circuit Fuse

> ***WARNING:*** Never replace a fuse with a higher amp rated fuse. Always use the specified fuse.

The N500 DC heater fuse is a 25 amp inline fuse. The N41X/N51X DC heater circuit fuse is a standard 30 amp (green) automotive blade type fuse. It is located on the power board, terminal F2.

AC Power Cord

N500 AC Power Cord

N500 models are supplied AC power through the AC power cord, which connects to the terminal block (see Figure 28). The cord's grounding prong on the AC outlet connector must be left intact and never be modified or cut. The cord's ground wire (green wire) must always be fastened to the refrigerator cabinet metal plate.

N41X/N51X AC Power Cord

N41X/N51X models are supplied AC power through the AC power cord. See Figure 29. Do not modify or cut the cord's grounding prong. Always make sure that ground wire (green wire) is tightly fastened to the refrigerator cabinet metal plate. The rounded side of the AC cord's power board connection must be connected to the power board with the rounded side facing left.

N500 Terminal Block

The terminal block is located on the back of the refrigerator in the lower left corner. See Figure 30. The terminal block receives AC power from the RV's AC outlet and DC power from the RV's DC power supply and distributes the power to the refrigerator's electrical components.

AC/DC Converter as Power Source

N41X/N51X Only

The power board must be supplied 12 Vdc only from the filtered output (battery side) of a converter.

Unfiltered voltage (commonly referred to as AC ripple) output of AC/DC converters can cause the electronic controls to set false fault codes. It can also turn off the refrigerator or prevent the refrigerator from turning off.

NOTE

Do not use a 12 volt converter to supply power to an N500.3 or N41X.3/N51X.3 model refrigerator. A 12 volt converter cannot supply enough power to operate the DC heater.

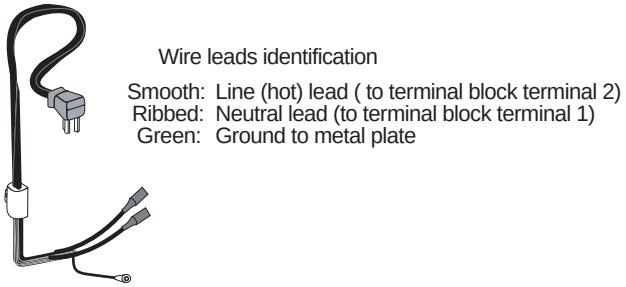

Figure 28. N500 AC power cord

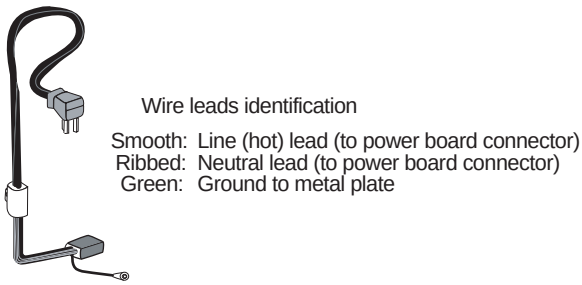

Figure 29. N41X/N51X AC power cord

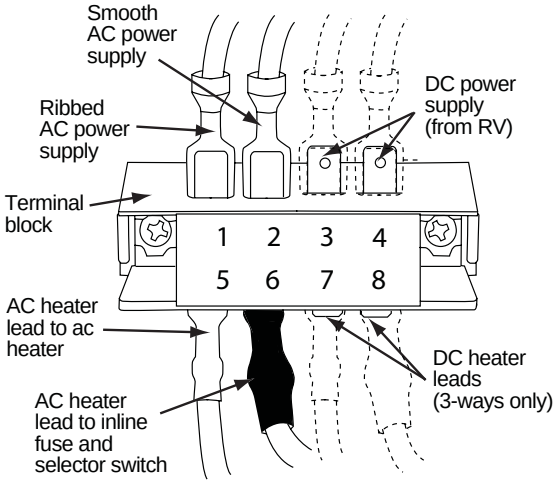

Figure 30. Terminal block and connections

Description

The cooling unit is a self-contained gravity flow absorption refrigeration system. The refrigerant charge is a solution of water, ammonia, sodium hydroxide, and sodium chromate (a corrosion inhibitor). Refrigeration is accomplished by applying heat energy and venting the heat extracted from the freezer and fresh food cabinet while maintaining the unit leveled.

Heat Absorption

The refrigerant transfers the heat from the freezer and the food cabinet to the absorber coils. At the absorber coils the metal surface absorbs the heat and air flow over the external surfaces of the coils carries away the heat. A thermal air current is created by the rising hot air and flows out of the enclosure through the roof exhaust vent or sidewall exhaust vent (depending on installation). The flowing air mass passes over the surface of the condenser fins where it absorbs heat transferred from the ammonia vapors flowing through the condenser.

The thermal airflow process creates a “chimney effect.” The fresh air drafted by the chimney effect through the intake vent removes rejected heat, supports combustion, and expels the exhaust gases produced by the combustion process. Any obstruction, restriction, or modification to vents or the enclosure will affect the cooling cycle. Poor cooling unit performance may be due to:

- Loose insulation interfering with the ventilation process.
- Construction material or debris left in the enclosure.
- Insect screening covering vents.
- Plastic sheeting covering vents.
- Items stored in the enclosure.
- Modifications to vents or enclosure.
- No roof or sidewall exhaust vent opening.

Information pertaining to ventilation and enclosure requirements appear on pages 25 and 26.

Leveled Operation

The circulation of the refrigerant through the cooling unit is accomplished by gravity flow; therefore, the refrigerator must be operated leveled. Off-level operation will effect the flow of the refrigerant through the cooling system. The maximum off-level operation limits are:

- 3 degrees from side-to-side.
- 6 degrees from front-to-back.

Exceeding the maximum off-level limits can permanently damage the cooling unit.

The cooling unit or its performance are not affected when the vehicle is in motion.

Gradual Decrease in Cooling Efficiency

A gradual decrease in cooling efficiency can be caused by the following factors:

- Ventilation obstruction.
- Heat source failure.
- Off-level operation.
- Lack of service or maintenance.
- Inadequate repairs.
- Unauthorized field modifications.
- Cooling unit failure.

Note that a gradual decrease in cooling efficiency is not always an indication of cooling unit failure. If any of these factors exist and are not corrected, a replacement cooling unit will also perform inefficiently or fail.

Step-by-step troubleshooting is the best approach when dealing with a gradual decrease in cooling. It is important to consider that the cooling unit is working, though not efficiently. Refer to the Cooling System Diagnostic Flowchart. The cooling unit must reach peak efficiency before troubleshooting can take place. It takes an average of four hours for the refrigerant to reach peak efficiency. This time frame depends on ambient air temperature.

Additionally, ambient air temperature plays a significant role if the unit was not installed correctly. Incorrect installation leads to poor ventilation, which in turn relates to poor cooling performance.

The unit’s service and maintenance history should also be considered when checking a cooling unit for poor cooling performance. The service history and the scope of service work performed may lead directly to the cause and resolution of a cooling problem.

Cooling Monitoring - N510 Units Only

Cooling Monitoring monitors the fin assembly temperature through the thermistor. This control is activated when the refrigerator is turned on and when the fin assembly temperature has rises above 40° F. When the fin temperature is above 40° F and a change in cooling is not detected in a specific amount of time, the refrigeration heat sources are turned off. Cooling Monitoring will not activate if:

- The fin assembly temperature stays below 40° F.
- If the thermistor is disconnected, open, or shorted.
- If the fresh food compartment door is sensed open (resampling starts when door closes).
- The AC heater is open.
- AC voltage is low.
- Frost management is active.

Cooling Monitoring Control Operation

The Cooling Monitoring operates in the following sequence:

1. Because the fin temperature is above 40° F when the refrigerator is turned ON, sampling begins when the refrigerator is turned ON and stops when the temperature falls below 40° F.
2. Monitoring activates if the fin temperature rises above 40° F while the refrigerator controls are demanding cooling.
3. Monitoring samples the fin temperature every ten minutes for a period of two hours.
4. If there is no decrease in temperature in this two-hour time period, Monitoring turns off the active refrigeration heat source.
5. After ten minutes, Monitoring restarts the heat source and monitors the fin temperature every ten minutes for another 40 minutes.
6. Within this 40-minute time period the temperature must decrease or Monitoring will turn off the refrigerator and lock out the heat sources.
7. Once the heat sources are locked out, the optical control assembly displays the "n" fault code.

First "n" Fault Code

The first time the "n" fault code (no cooling) is displayed, it can be cleared by the user by turning the refrigerator OFF and then back ON. This gives the user the opportunity to check for problems that may have caused an "n" code, such as obstructed ventilation. This fault code occurrence is then stored by the controls. If the refrigerator completes a full cooling cycle after it is turned back on, this fault code occurrence will be erased from the controls.

NOTE

An "n" fault code occurrence is not stored in the built-in diagnostic stored fault history accessible through the Diagnostic Mode. Instead it is stored in a separate, inaccessible stored fault history.

Second "n" Fault Code

If the refrigerator does not complete a full cooling cycle after the user turns the refrigerator back on, a power board reset is required. See the "Power Board Resetting Procedure" section.

WARNING: **Do not** operate the refrigerator if the cooling unit is leaking or leakage is suspected.

Refrigerant Leakage - All Models

Yellow powder or liquid deposits at the rear of the refrigerator or ammonia smell inside the refrigerator indicate refrigerant leakage. Exercise extreme care when handling a leaking or a suspected leaking cooling unit. The cooling system refrigerant solution consists of water, ammonia, sodium hydroxide, and sodium chromate.

Disposal of Cooling Unit - All Models

WARNING: **Do not**, under any circumstances, release any waste or residue from the cooling unit directly into sewers or surface waters. If any liquid leaks or spills from the cooling unit, contact the nearest environmental services for guidance.

Dispose of cooling unit according to local, state, and federal guidelines and regulations. Dispose of any liquid waste or residue according to pre-emergency planning and all applicable local, state, and federal regulations.

Any cooling system replaced under the NORCOLD warranty procedure must be returned to NORCOLD per the instructions included with the replacement system.

Cooling System Diagnostic Flowchart

WARNING: **Do not bypass or modify** the refrigerator's controls or components to diagnose the cooling system. Do not wire the heater(s) direct. The heater is supplied power through a fused circuit.

WARNING: **Do not operate** the refrigerator if the cooling unit is leaking or a leak is suspected.

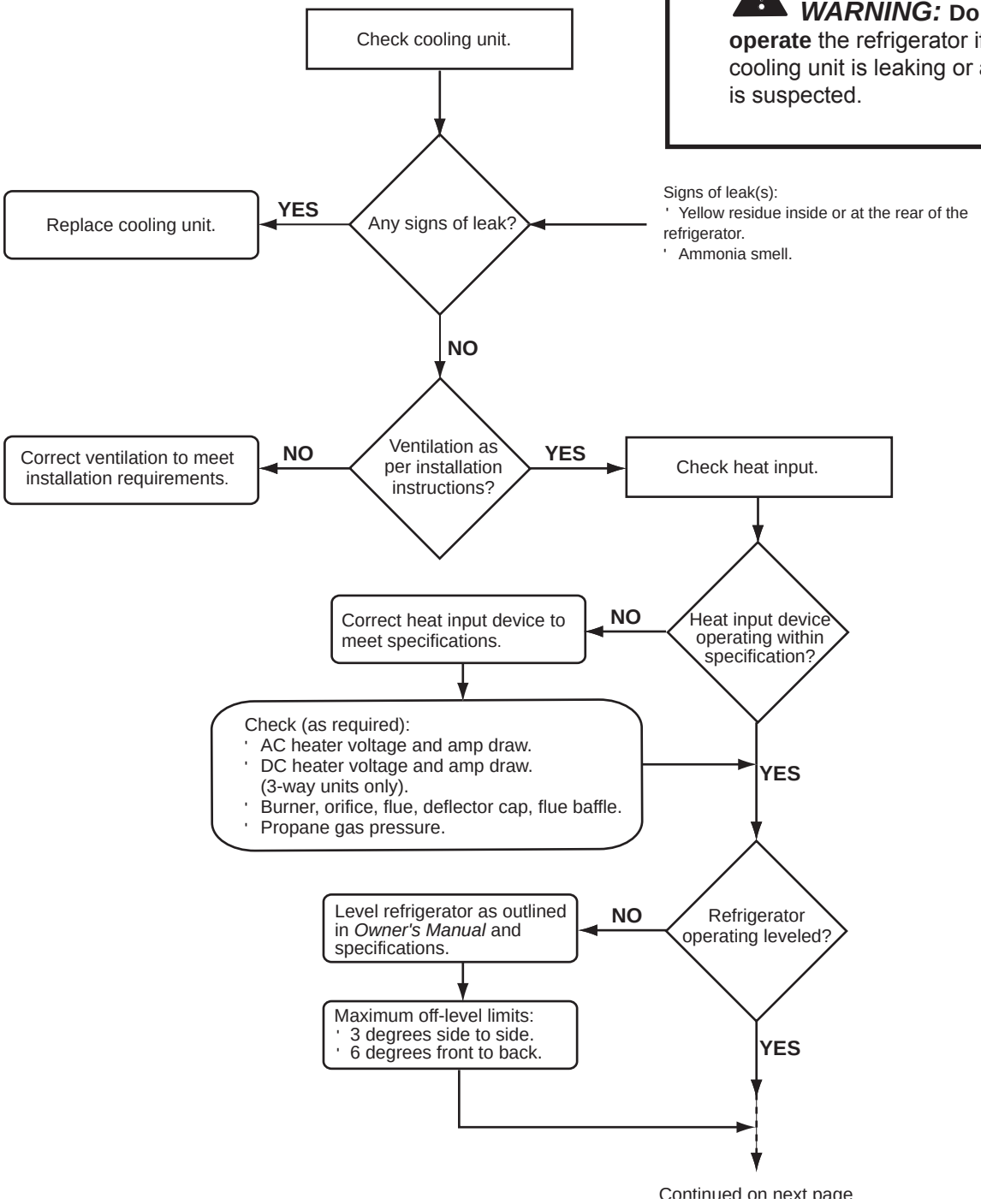

Continued on next page

WARNING: Do not operate the refrigerator if the cooling unit is leaking or a leak is suspected.

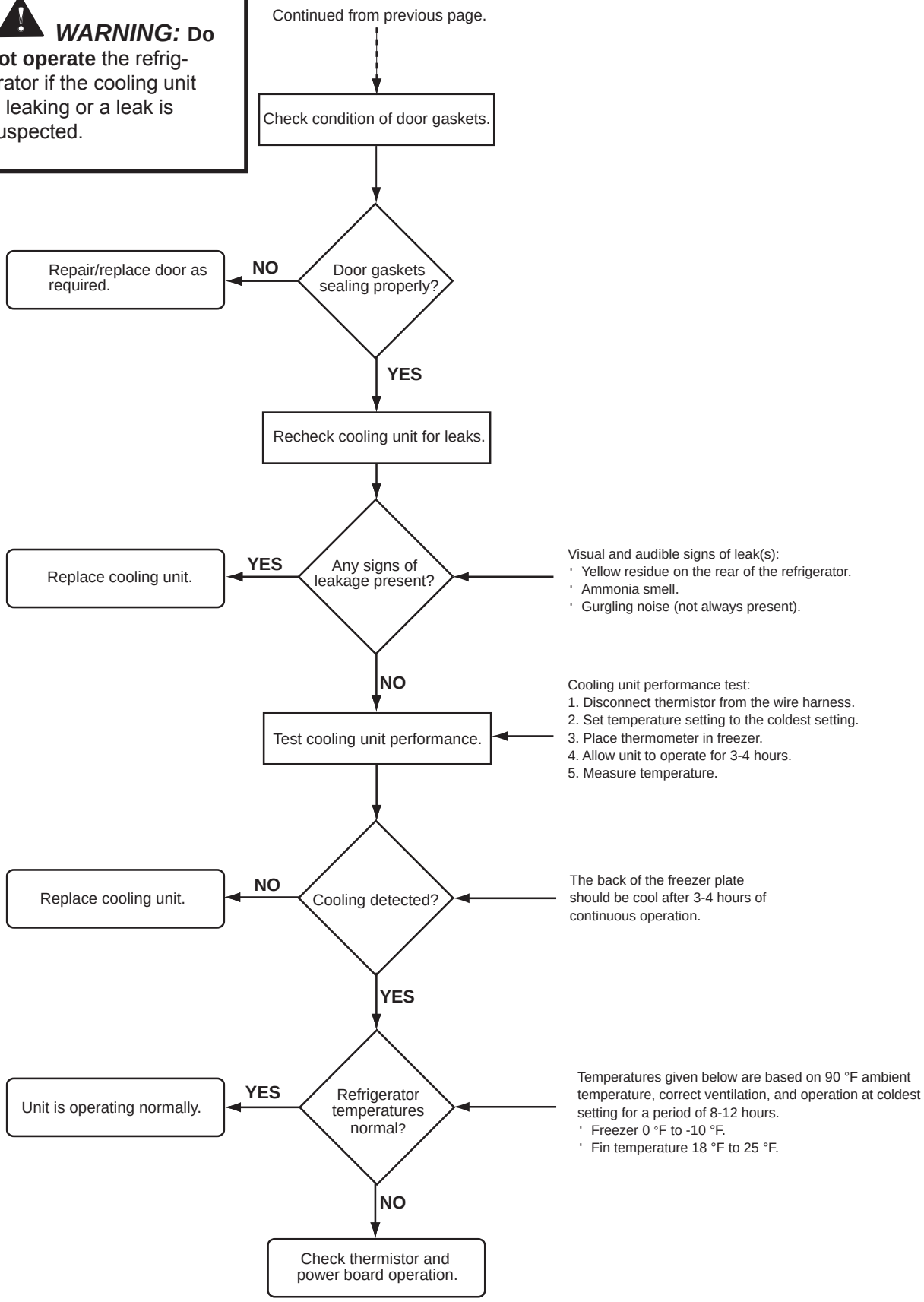

ELECTRONIC COMPONENTS - ALL MODELS

Spark/Sense Electrode - All Models

The spark/sense electrode assembly provides a spark to light the burner and monitors the presence of the flame. In N500 models, the spark/sense electrode assembly is routed through the relighter; in N41X/N51X models it is routed through the power board. See Figure 36.

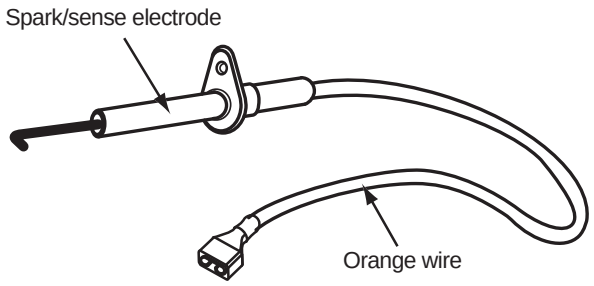

Figure 36. Spark/sense electrode

ELECTRONIC COMPONENTS - N500 MODELS

Relighter - N500 Models

The relighter relays signals from the gas safety valve to the spark/sense electrode and to the flame indicator. It operates on 12 Vdc. See Figure 37.

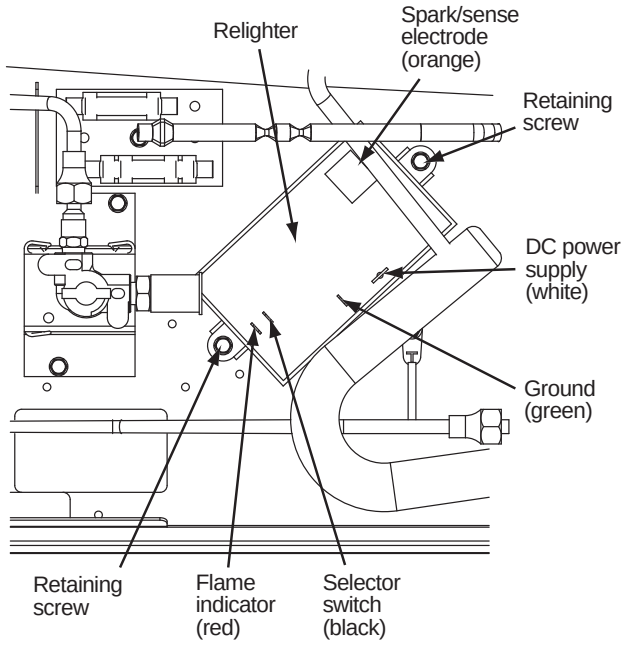

Figure 37. Relighter and connections

Flame Indicator - N500 Models

The flame indicator allows the user to monitor the gas flame when the refrigerator is in LP Mode. The flame indicator lights indicates the existence of a flame through the relighter.

Power Board - N41X/51X Models

Description

Inputs, outputs, monitoring, and diagnostic functions are managed and controlled by the power board. Inputs, outputs, monitoring information, and diagnostic functions are communicated through the optical control assembly. The wire harness interfacing the power board with the optical control assembly is “foamed” into the cabinet.

NOTE

Because the wire harness is “foamed” into the cabinet, it is not a replaceable component.

The power board is located on the back of the refrigerator below the absorber coils. It is seated on an insulated base to prevent the printed circuit from making contact with the refrigerator cabinet’s metal plate. The power board, seated in its base, is shown in Figure 38.

Two self-tapping 1/4 inch hex head screws hold the power board and base in place. The power board cover is held by three self-tapping 1/4 inch hex head screws.

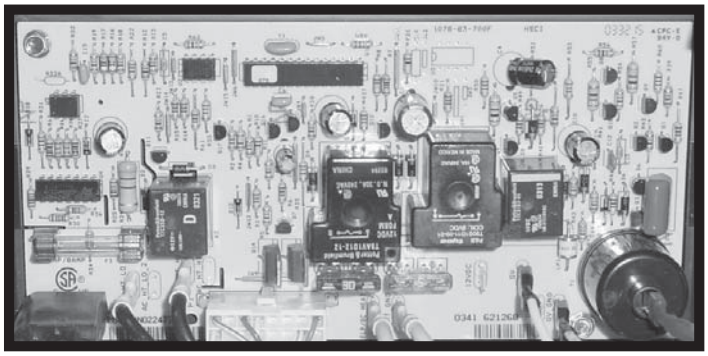

Figure 38. N510 Power Board

N500 Controls

> ***WARNING:*** **Do not** hold the gas safety valve plunger in (open) for more than 30 seconds. If the burner does not ignite within 30 seconds, wait at least five minutes before attempting to relight the burner. Holding the gas safety valve plunger in (open) for more than 30 seconds will allow propane gas to pocket in and around the burner. A propane gas pocket in the burner area can cause a fire or explosion which can result in extensive property damage, burn injury and/or death.

All N500 model controls operate on 12 Vdc. The controls and their functions are shown in Figure 39.

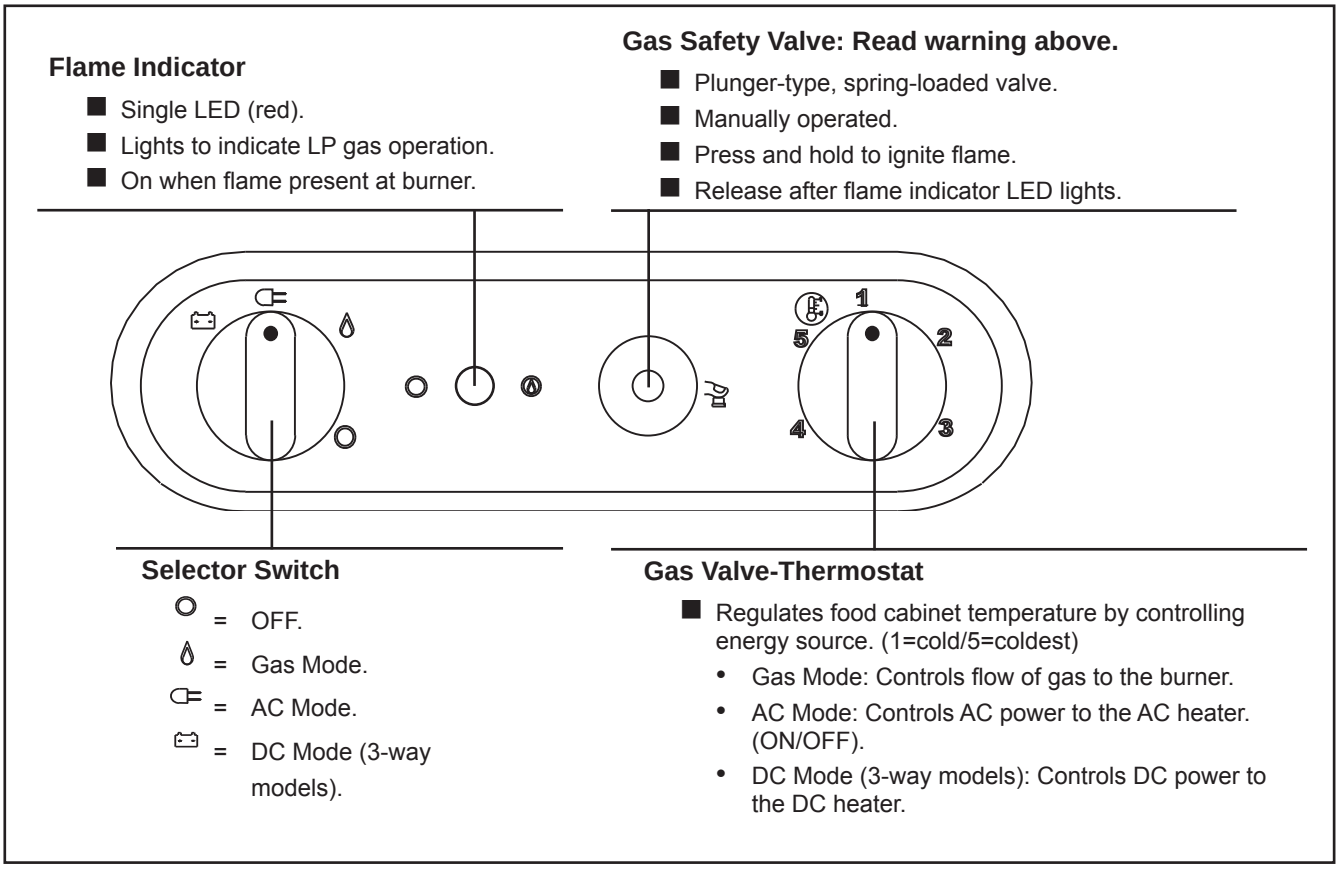

Figure 39. N500 Controls

N41X/N51X Controls

All N41X/N51X model controls operate on 12 Vdc. The controls and their functions are shown in Figure 41.

TEMP SET Switch

- Press and release to verify food cabinet temperature setting (1=cold/5=coldest).
- Press and hold to set or change temperature setting in food cabinet.

MODE Switch

- Press and hold to change operation mode (AUTO, AC, LP GAS and DC [3-way models only]).
- Operation mode verified by the 7-segment LED.

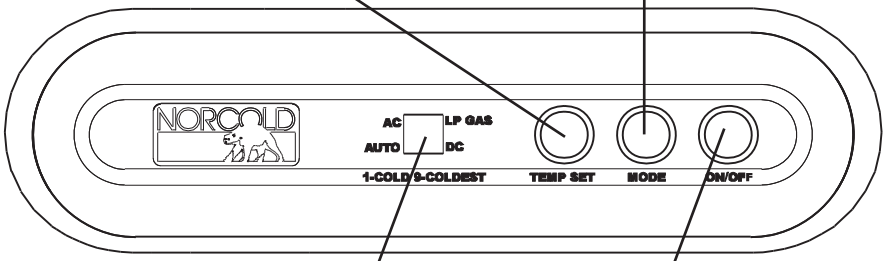

7-Segment LED Display

- Provides visual verification of operation mode, food cabinet temperature setting, fault code verification, and operational and diagnostic information.
  - Gas manual mode operation, LED aside "LP GAS" displayed.
  - AC manual mode operation, LED aside "AC" displayed.
  - AUTO mode operation, LED aside "AUTO" and LED aside available energy source segment ("AC," "LP GAS," or "DC") displayed.
  - DC manual mode operation selected (3-way), LED aside "DC" displayed.

ON/OFF Switch

- Press and hold for two seconds to turn refrigerator ON.
- Press and hold for two seconds to turn refrigerator OFF.

Figure 41. N41X/N51X Controls

N41X/N51X Modes of Operation

N41X/N51X models are designed for 2-way or 3-way operation.

AUTO Mode - All N510 Units

In AUTO mode, AC power is the first heat energy source selected by the controls. If AC power is not present, the controls shift to propane gas, the controls second priority heat energy source.

AUTO Mode – N41X.3/N51X.3 (3-way units)

In 3-way units, if AC is not available, if a flame is not sensed, the flame goes out, or an ignition failure occurs, the controls shift to DC power, the third priority heat energy source.

AUTO AC Operation

When AUTO mode is selected:

1. Mode of operation is indicated by the AUTO LED.

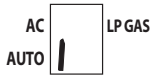

2. The AC LED comes on as the controls search for AC power availability.

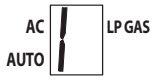

3. The AC LED turns off when AC power is detected by the controls. Mode operation is indicated by the AUTO LED.

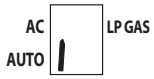

NOTE

In AUTO mode, pressing the MODE push-button momentarily displays the heat energy source in use. For example, in AUTO AC, the AC LED will come on and stay on for approximately 10 seconds.

AUTO LP Gas Operation

In AUTO mode, the controls shift to propane gas when AC power is not available or interrupted. The shift to AUTO LP GAS proceeds as follows:



1. The AUTO LED indicates the unit is on and operating in AUTO mode.



2. The AC LED comes on as the controls verify AC power availability.

3. Since AC power is not detected, the controls shift to propane gas. The LP GAS LED comes on to signal the start of a 30 second trial-for-ignition.

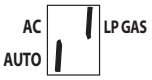

4. Once the controls sense the flame, the LP GAS LED turns off leaving the AUTO LED on to indicate AUTO mode operation.

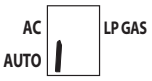

Shift from AUTO LP GAS to AUTO AC - 2-Way

In AUTO mode, the controls shift automatically from AUTO LP GAS back to AUTO AC when the controls detect that AC power has become available.

No AC Power and No Flame

When AC power is not present and a flame is not sensed, the controls:

1. Acknowledge both faults after the 30 seconds trial-for-ignition is over.

2. Shut off power to the solenoid gas valve.

3. Set "gas lock-out".

NOTE

In AUTO mode, the controls maintain "gas lock-out" until a full cooling cycle on AUTO AC is completed. Turning the refrigerator OFF and back ON also clears "gas lock-out."

4. Provide a visual warning by flashing alternating "A" (no AC) and "F" (no flame) fault codes, shown below.



Alternating "A" and "F" Codes

5. Record and store the no AC and no flame faults in diagnostics nonvolatile memory fault history.

Troubleshooting a "F" and "A" Faults

Use the following references to identify, troubleshoot, and correct an ignition failure and/or no AC faults.

- See "F" fault code troubleshooting flowchart section.
- See "A" fault code troubleshooting flowchart section.
- See "Diagnostic Mode–N41X/N51X Models, Screen 4" section.

AUTO DC Operation – 3-Way Units Only

In AUTO DC mode, the controls shift to DC power when AC power is not present and flame is not sensed. When the controls shift to AUTO DC:

1. The AUTO mode operation indicator displays.



2. The AUTO and AC indicators display as the controls search for AC power.

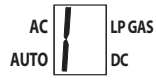

3. When AC power is not detected the controls shift to AUTO LP GAS mode. The AUTO and LP GAS indicators display as the controls start a 30 second trial-for ignition

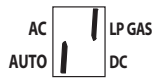

4 If a flame is not sensed the controls shift to AUTO DC Mode. The AUTO and DC indicators display as the controls search for DC power.

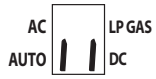

5. Once DC power is detected, the AUTO LED displays.



NOTE

The auto sequence described in steps 1 through 5 is repeated after the completion of each cooling cycle to enable the controls to select a higher priority heat energy source if available.

The controls priorities for selecting a heat energy source are:

- First priority: AC power.
- Second priority: propane gas.
- Third priority: DC power – 3-way units only.

NOTE

AUTO DC and DC Manual Mode maintain cooling only.

AC Manual Mode

When the AC Manual Mode is selected, AC power is the only heat energy source selected by the controls. When the AC Manual Mode is selected:

1. Mode of operation selected is indicated by the AC LED.

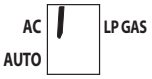

2. The AC LED stays on as long as the AC Manual Mode is selected.

No AC Power or Loss of AC Power

When no AC power is available or AC power is lost, the controls:

1. Provide a visual warning by flashing the "A" (no AC) fault code.



2. Record and store the no AC fault in diagnostics nonvolatile memory fault history.

Troubleshooting an "A" Fault

Use the following references to identify, troubleshoot, and correct a no AC fault.

- See "A" fault code troubleshooting flowchart" section.
- See "Diagnostic Mode–N41X/N51X Model, Screen 4" section.

AC Power Restored

When AC power is restored, the controls:

1. Automatically restore AC Manual Mode operation.

2. Clear the "A" fault code from the screen. However, the recorded fault history will not be erased from memory.

3. Display the AC LED.

LP GAS Manual Mode

When LP GAS Manual Mode is selected, propane gas is the only heat energy source selected by the controls. When LP GAS Manual Mode is selected:

1. Mode of operation is indicated by the LP GAS LED.

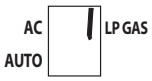

2. The LP GAS LED stays on as the flame is sensed.

Flame Fails to Ignite or Flame Goes Out

If a flame does not ignite or the flame goes out, the controls:

1. Set "gas lock-out" and shut off power to the solenoid gas valve.
2. Provide a visual warning by flashing the "F" (no flame) fault code.



3. Record and store the no flame fault in diagnostics nonvolatile memory fault history.

Clearing "Gas Lock-Out"

"Gas lock-out" can be cleared by turning the refrigerator OFF and back ON.

Troubleshooting an "F" Fault

Use the following references to identify, troubleshoot, and correct an ignition failure fault.

- See "F" fault code troubleshooting flowchart" section.
- See "Diagnostic Mode N41X/N51X , Screen 4" section.

DC Manual Mode: 3-Way Units Only

When DC Manual Mode is selected, DC power is the only heat energy source selected by the controls. When the DC Manual Mode is selected:

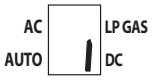

1. Mode of operation is indicated by the DC LED display.

2. The DC LED stays on as the DC Manual Mode is selected.

NOTE

AUTO DC and DC Manual Mode Maintain cooling only.

Troubleshooting a DC Fault

Use the following references to identify, troubleshoot, and correct an ignition failure fault.

- See "C" fault code troubleshooting flowchart" section".
- See "E" fault code troubleshooting flowchart" section.
- See "Diagnostic Mode N41X/N51 Mode, Screen 4" section.

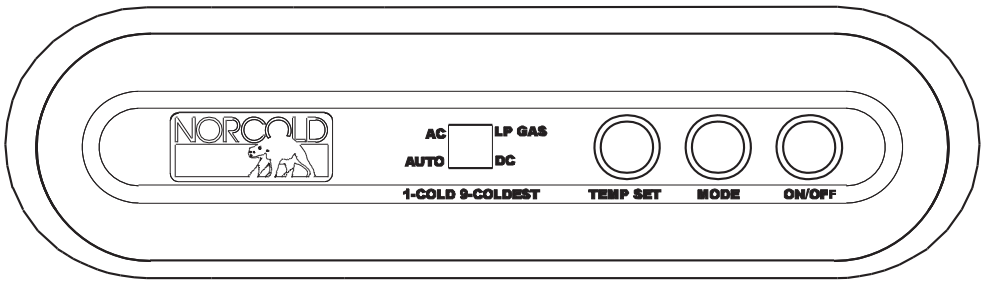

Figure 44. N41X/N51X Optical Control Assembly.

Diagnostic Mode

The Diagnostic Mode uses nine diagnostic channels, commonly known as “screens,” to display “live” inputs, outputs, and fault history. Each screen is identified by a number, which shows in the optical control assembly display. See Figure 44.

The N41X/N51X optical control display uses a single 7-segment LED module to display diagnostic information. Information made up of two letters or numbers displays in an alternating sequence. Fault history information, “live” inputs, and outputs, are presented using lighted LED segments. The diagnostic LED segments, if present, display after the screen number turns off. The diagnostic LED segment’s identification numbers are shown in Figure 45.

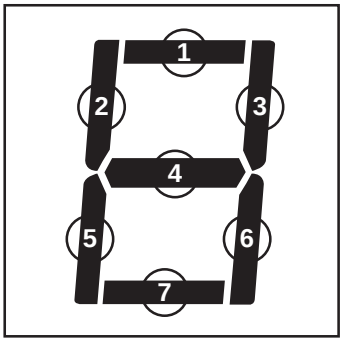

Figure 45. Diagnostic LEDs segments identification

Accessing the Diagnostic Mode

To access the Diagnostic Mode:

1. **Press** and **hold both** the MODE and TEMP SET buttons **at the same time**.
2. **Release** the MODE and TEMP SET as soon as screen displays.
3. A few seconds later, displays.

Changing Screens

To change screens, **press** the MODE button until the next screen displays.

Exiting the Diagnostic Mode

To exit the Diagnostic Mode:

1. **Press** and **hold** the MODE and TEMP SET buttons **at the same time**.
2. **Release** the MODE and TEMP SET buttons as soon as the LED segment that represents the selected operation mode appears on the display (AUTO, AC, or LP GAS).

Turning the refrigerator OFF then back ON also exits the Diagnostic Mode.

Screens and Diagnostic Segments Information

Screen 1 Diagnostic Mode Active

Screen 1 confirms that the Diagnostic Mode is active. A few seconds after the number displays, all LED segments light. See illustration.



If the LED segments do not match the illustration, the fault is in the optical control display. Replacing the optical control assembly should resolve this fault.

Press the MODE button to bring up screen 2.

Screen 2 LED Segments Reliability Check

Screen 2 confirms the reliability of the display. The screen should go completely blank after the screen number is displayed.



If an LED segment displays, the fault is in the optical control assembly. Replacing the optical control assembly should resolve this fault.

Press the MODE button to bring up screen 3.

Screen 3 Thermistor Fin Temperature

Screen 3 shows the actual fin temperature being sensed by the thermistor. **This is not the fresh food cabinet air temperature**. The example illustration below shows 30°F fin temperature as displayed in screen 3.

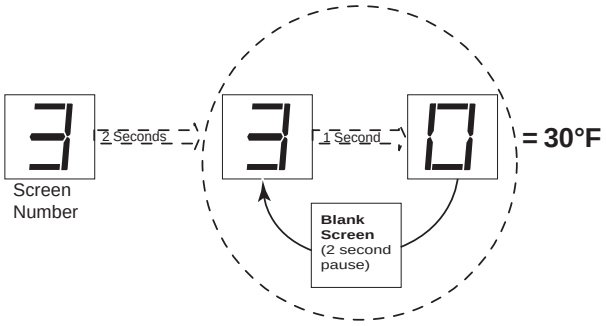

Press the MODE button to bring up screen 4.

Screen 4 Stored Fault History

Screen 4 displays stored fault history using lighted LED segments. The illustration provides fault history information and assigned LED segments. **If a fault occurred, its assigned LED will light**.

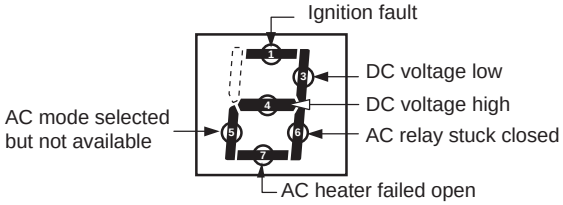

Press the MODE button to bring up screen 5.

Screen 5 Stored Fault History

Screen 5 also displays stored fault history using lighted LED segments. The illustration provides fault history information and assigned LED segments. **If a fault occurred, its assigned LED will light**.

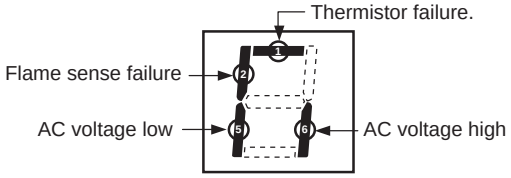

Press the MODE button to bring up screen 6.

Screen 6 Erase Fault History Data

Screen 6 provides a way to erase stored fault history from memory. To erase stored fault history:

1. Press and hold the TEMP SET button when E and r display.
2. Release the TEMP SET button when C and L display.
3. Wait five seconds.
4. Press and hold the TEMP SET button until E and r display again.

Press the MODE button to bring up screen 7.

Screen 7 Power Board Inputs

Screen 7 displays "live" power board inputs using lighted LED segments. The illustration below provides "live" inputs information and assigned LED segments. **If a power board input is active or "live", its assigned LED will light**.

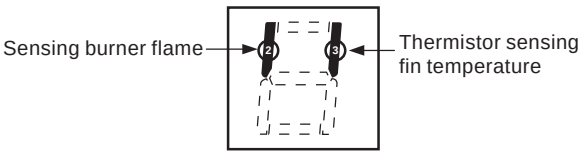

Press the MODE button to bring up screen 8.

Screen 8 Power Board Outputs

Screen 8 displays "live" power board outputs using lighted LED segments. The illustration below provides "live" outputs information and assigned LED segments. **If the power board output is active or "live", the assigned LED will light**.

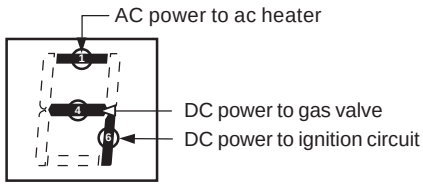

Press the MODE button to bring up screen 9.

Screen 9 Power Board DC Voltage Status

Screen 9 displays power board DC voltage status using lighted LED segments. The illustration below provides DC voltage status and assigned LED segments. **If DC voltage at the power board is within normal range (10.5 to 15.4 Vdc), LED segment 4 will be on**.

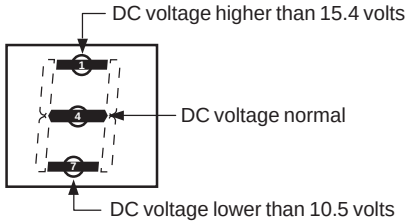

Press the MODE button to return to screen 1.

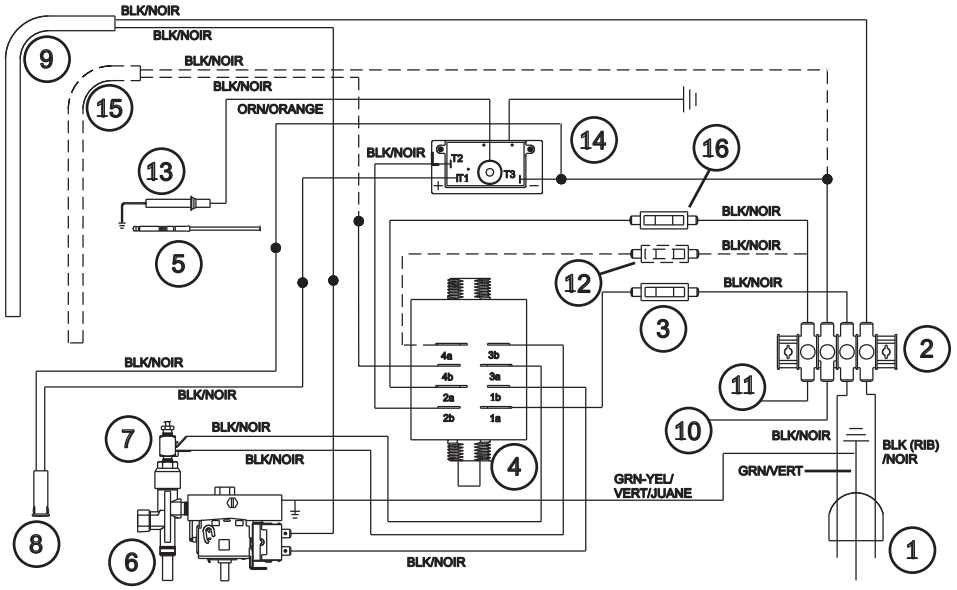

1	120 Vac power cord	7	Thermocouple interrupter	12	25 amp fuse (3-ways)
2	Terminal block	8	Flame indicator	13	Spark electrode
3	3 amp fuse	9	AC heater	14	Relighter
4	Selector switch	10	-12 Vdc power supply	15	DC heater (3-ways)
5	Thermocouple	11	+12 Vdc power supply	16	1 amp fuse
6	Thermostat/gas safety valve				

Figure 46. N500 wiring pictorial

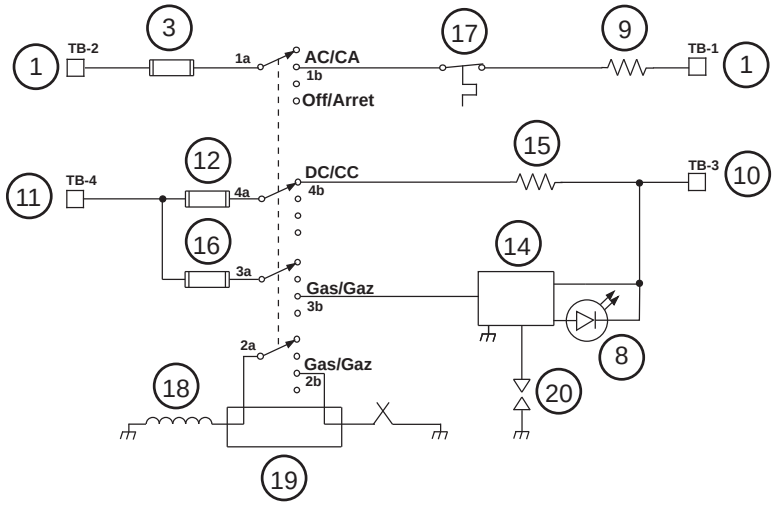

1	120 Vac	10	-12 Vdc com	16	1 amp fuse
3	3 amp fuse	11	+12 Vdc	17	Thermostat
5	Thermocouple	12	25 amp fuse (3-ways)	18	Gas safety valve
8	Flame indicator	14	Relighter	19	Thermocouple interrupter
9	AC heater	15	DC heater (3-ways)	20	Spark gap

Figure 47. N500 wiring diagram

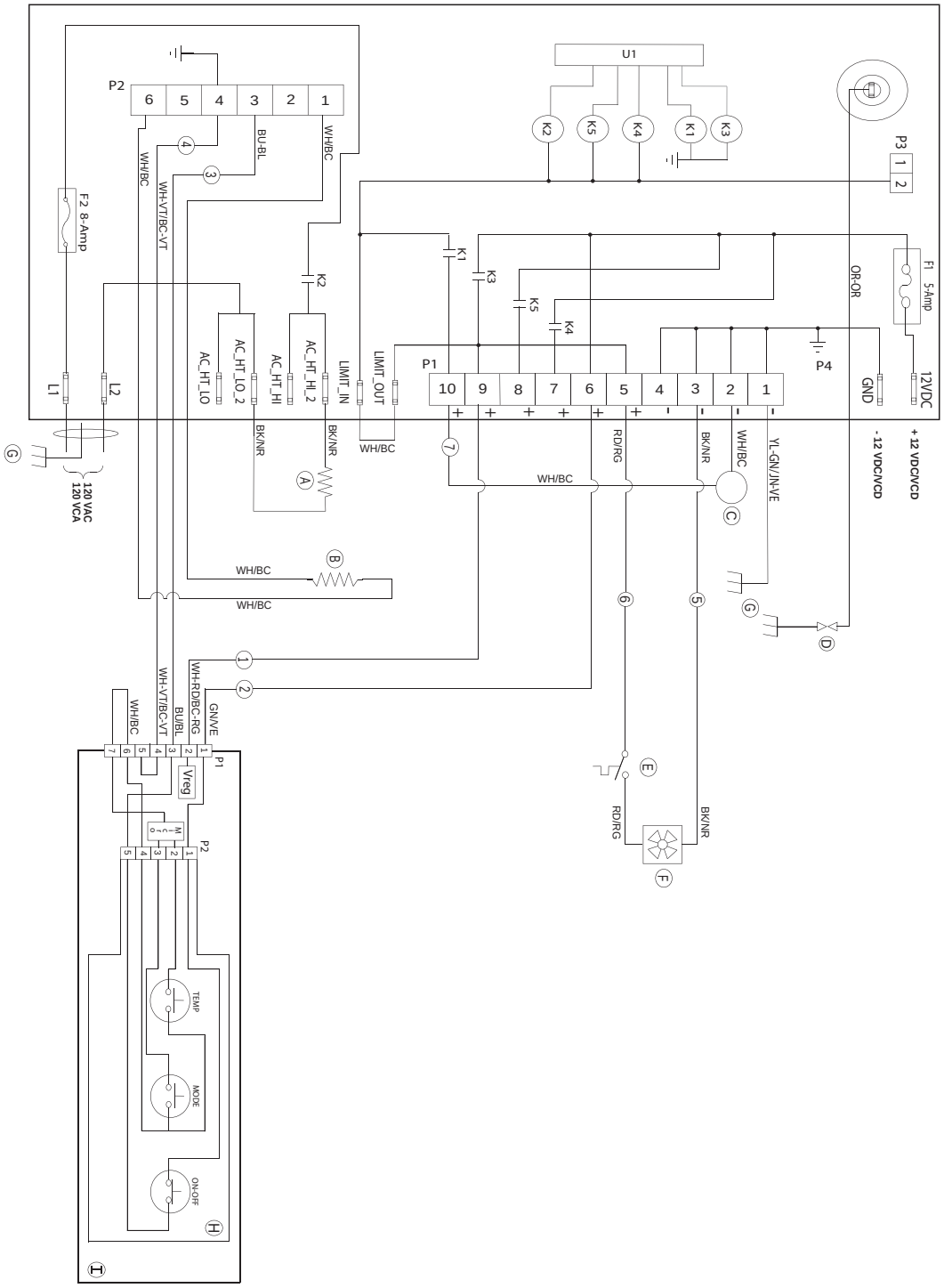

Figure 48. N41X/N51X wiring pictorial

No.	Description
A	AC Heater
B	Thermistor
C	Gas Valve
D	Igniter
E	Temperature Switch
F	Fan
G	Chassis Ground
H	Overlay
I	Display

No.	Description
1	Switched 12 VDC
2	Fused Continuous 12 VDC
3	Communications
4	Display Ground
5	Auxiliary Ground
6	Auxiliary +12VDC
7	Gas Valve
F1	5 Amp DC Fuse
F2	8 Amp AC Fuse