Panasonic®

Operating Instructions

Pharmaceutical Refrigerator

MPR-215F

MPR-215F Series



Please read these instructions carefully before using this product, and save this operating instructions for future use.

See page 44 for all model numbers.

CONTENTS

INTRODUCTION	P. 3
PRECAUTIONS FOR SAFE OPERATION	P. 4
ENVIRONMENTAL CONDITIONS	P. 8
REFRIGERATOR COMPONENTS	
Refrigerator unit	P. 9
Control panel components	P. 11
INSTALLATION SITE	P. 12
INSTALLATION	P. 13
START-UP OF UNIT	P. 14
SETTING OF CHAMBER TEMPERATURE	P. 15
LOCK OF TEMPERATURE SETTING	P. 16
STOP OF FREEZER OPERATION	P. 17
DEFROSTING	
Defrosting of refrigerator	P. 18
Defrosting of freezer	P. 18
SETTING OF ALARM (REFRIGERATOR)	
Setting of high temperature alarm	P. 19
Setting of low temperature alarm	P. 20
SETTING OF ALARM (FREEZER)	
Setting of high temperature alarm	P. 21
Setting of low temperature alarm	P. 22
SETTING OF ALARM BUZZER RECOVERY	P. 23
OPERATION CHECK AFTER RECOVERY	P. 24
ALARM FUNCTIONS	P. 25
SAFETY FUNCTIONS	P. 25
SELF DIAGNOSTIC FUNCTIONS	P. 26
ROUTINE MAINTENANCE	
Cleaning of exterior, interior, and accessories	P. 27
Replacement of lamp	P. 28
TROUBLESHOOTING	P. 29
DISPOSAL OF UNIT	P. 30
Decontamination of chamber	P. 30
OPTIONAL COMPONENT	
Temperature recorder	P. 35
Installation of MTR-0621LH (1)	P. 36
Installation of MTR-0621LH (2)	P. 37
Installation of MTR-4015LH	P. 39
Installation of MTR-G3504A or MTR-G3504C	P. 41
SPECIFICATIONS	P. 43
PERFORMANCE	P. 44
SAFETY CHECK SHEET	P. 45

INTRODUCTION

■ Read this operating instructions carefully before using the appliance and follow the instructions for safety operation.

■ Our company never guarantee any safety if the appliance is used for any objects other than intended use or used by any procedures other than those mentioned in this operating instructions.

■ Keep this operating instructions in an adequate place to refer to it as necessary.

■ The contents of the operating instructions will be subjected to change without notice due to the improvement of performance or functions.

■ Contact our sales representative or agent if any page of the operating instructions is lost or page order is incorrect.

■ Contact our sales representative or agent if any point in this operating instructions is unclear or if there are any inaccuracies.

■ No part of this operating instructions may be reproduced in any form without the expressed written permission of our company.

⚠CAUTION

Our company guarantees the product under certain warranty conditions. Our company in no way shall be responsible for any loss of content or damage of content.

PRECAUTIONS FOR SAFE OPERATION

It is imperative that the user complies with this operating instructions as it contains important safety advice.

Items and procedures are described so that you can use this unit correctly and safely. If the precautions advised are followed, this will prevent possible injury to the user and any other person.

Precautions are illustrated in the following way:

⚠WARNING

Failure to observe WARNING signs could result in a hazard to personnel possibly resulting in serious injury or death.

⚠CAUTION

Failure to observe CAUTION signs could result in injury to personnel and damage to the unit and associated property.

Symbol shows;

△ this symbol means caution.

⃠ this symbol means an action is prohibited.

● this symbol means an instruction must be followed.

Be sure to keep this operating instructions in a place accessible to users of this unit.

< Label on the unit >



This mark is labeled on the cover in which the electrical components of high voltage are enclosed to prevent the electric shock.
The cover should be removed by a qualified engineer or a service personnel only.

PRECAUTIONS FOR SAFE OPERATION

⚠WARNING

Do not use the unit outdoors. Current leakage or electric shock may result if the unit is exposed to rain water.

Only qualified engineers or service personnel should install the unit. The installation by unqualified personnel may cause electric shock or fire.

Install the unit on a sturdy floor and take an adequate precaution to prevent the unit from turning over. If the floor is not strong enough or the installation site is not adequate, this may result in injury from the unit falling or tipping over.

Never install the unit in a humid place or a place where it is likely to be splashed by water. Deterioration of the insulation may result which could cause current leakage or electric shock.

Never install the unit in a flammable or volatile location. This may cause explosion or fire.

Never install the unit where acid or corrosive gases are present as current leakage or electric shock may result due to corrosion.

Always ground (earth) the unit to prevent electric shock. If the power supply outlet is not grounded, it will be necessary to install a ground by qualified engineers.

Never ground the unit through a gas pipe, water main, telephone line or lightning rod. Such grounding may cause electric shock in the case of an incomplete circuit.

Connect the unit to a power source as indicated on the rating label attached to the unit. Use of any other voltage or frequency other than that on the rating label may cause fire or electric shock.

Never store volatile or flammable substances in this unit if the container cannot be sealed. These may cause explosion or fire.

Do not insert metal objects such as a pin or a wire into any vent, gap or any outlet on the unit. This may cause electric shock or injury by accidental contact with moving parts.

Use this unit in safe area when treating the poison, harmful or radiate articles. Improper use may cause bad effect on your health or environment.

Turn off the power switch (if provided) and disconnect the power supply to the unit prior to any repair or maintenance of the unit in order to prevent electric shock or injury.

Do not touch any electrical parts (such as power supply plug) or operate switches with a wet hand. This may cause electric shock.

PRECAUTIONS FOR SAFE OPERATION

⚠WARNING

Ensure you do not inhale or consume medication or aerosols from around the unit at the time of maintenance. These may be harmful to your health.

Never splash water directly onto the unit as this may cause electric shock or short circuit.

Never put containers with liquid on the unit as this may cause electric shock or short circuit when the liquid is spilled.

Never bind, process, or step on the power supply cord, or never damage or break the power supply plug. A broken supply cord or plug may cause fire or electric shock.

Do not use the supply cord if its plug is loose. Such supply cord may cause fire or electric shock.

Never disassemble, repair, or modify the unit yourself. Any such work carried out by an unauthorized person may result in fire, or electric shock or injury due to a malfunction.

Disconnect the power supply plug if there is something wrong with the unit. Continued abnormal operation may cause electric shock or fire.

When removing the plug from the power supply outlet, grip the power supply plug, not the cord. Pulling the cord may result in electric shock or fire by short circuit.

Disconnect the power supply plug before moving the unit. Take care not to damage the power cord. A damaged cord may cause electric shock or fire.

Disconnect the power plug when the unit is not used for long periods. Keeping the connection may cause electric shock, current leakage, or fire due to the deterioration of insulation.

If the unit is to be stored unused in an unsupervised area for an extended period, **ensure that children do not have access and that doors are locked completely with a key.**

The disposal of the unit should be accomplished by appropriate personnel. Remove doors to prevent accidents such as suffocation.

Do not put the packing plastic bag within reach of children as suffocation may result.

PRECAUTIONS FOR SAFE OPERATION

⚠CAUTION

Use a dedicated power source (a dedicated circuit with a breaker) as indicated on the rating label attached to the unit. A branched circuit may cause fire resulting from abnormal heating.

Connect the power supply plug to the power source firmly after removing the dust on the plug. A dusty plug or improper insertion may cause a heat or ignition.

Never store corrosive substances such as acid or alkali in this unit if the container cannot be sealed. These may cause corrosion of inner components or electric parts.

Check the setting when starting up of operation after power failure or turning off of power switch. The stored items may be damaged due to the change of setting.

Be careful not to tip over the unit during movement to prevent damage or injury.

Prepare a safety check sheet (copy the last page) when you request any repair or maintenance for the safety of service personnel.

ENVIRONMENTAL CONDITIONS

This equipment is designed to be safe at least under the following conditions (based on the IEC 61010-1):

■ Indoor use;

■ Altitude up to 2000 m;

■ Temperature 5°C to 40°C

■ Maximum relative humidity 80% for temperature up to 31°C decreasing linearly to 50% relative humidity at 40°C;

■ Mains supply voltage fluctuations up to ±10% of the nominal voltage;

■ Transient overvoltages up to the levels of OVERVOLTAGE CATEGORY Ⅱ;

■ Temporary OVERVOLTAGES occurring on the mains supply;

■ Applicable pollution degree of the intended environment (POLLUTION DEGREE 2 in most cases);

REFRIGERATOR COMPONENTS

Refrigerator unit

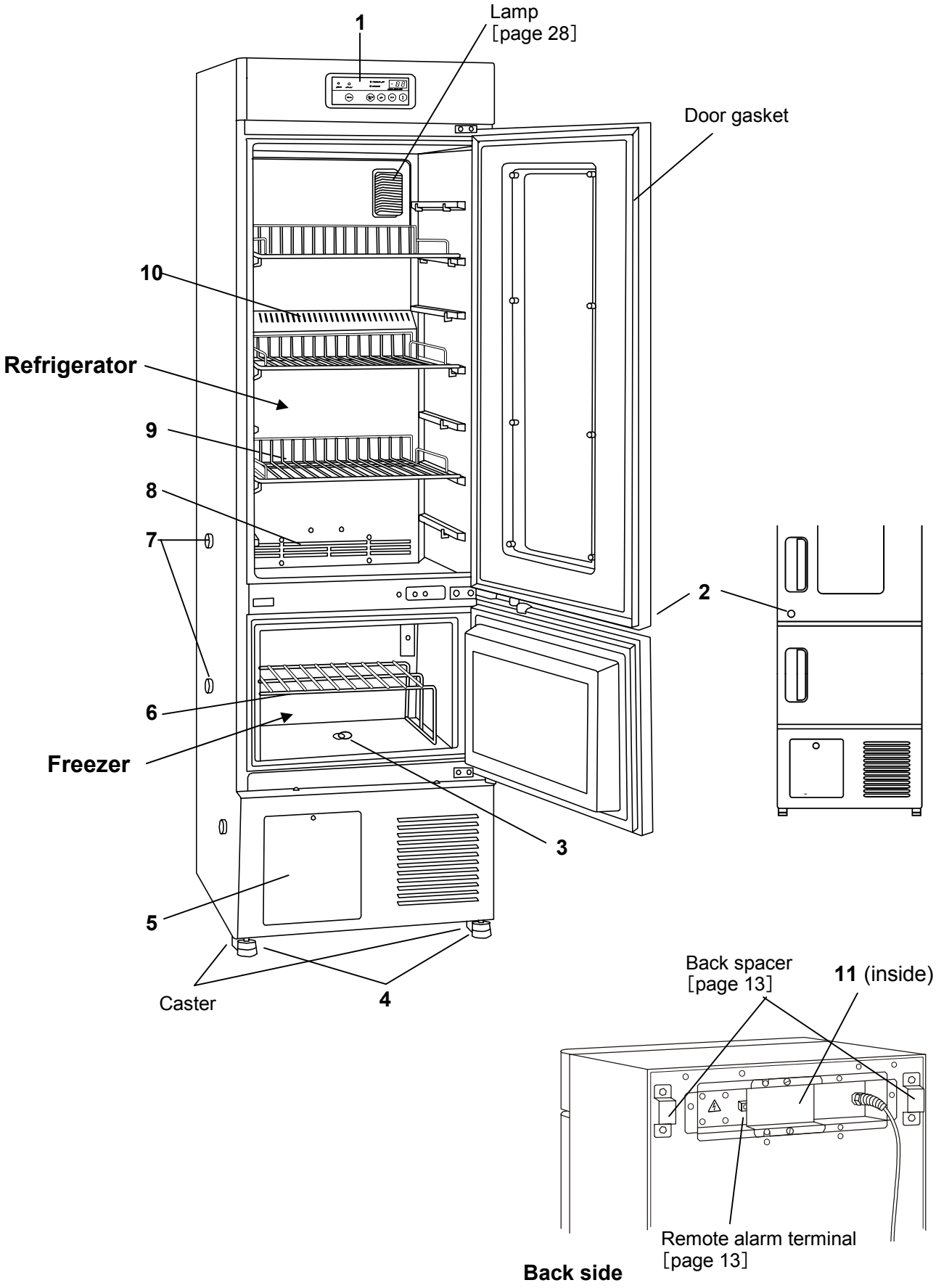

REFRIGERATOR COMPONENTS

1. Control panel: With the key on the control panel, temperature display can be changed and the alarm buzzer can be canceled. Also, the running status can be checked on the temperature display and the indicators. [page 11]

2. Keyhole: The door of refrigerator and freezer can be locked with the enclosed key.

3. Drain port (bottom of freezer): Remove the cap when the water resulting from defrosting is drained. The drained water is evaporated in the evaporating tray under the freezer.
✧ Replace the cap after drainage.

4. Leveling feet (front, 2 locations): These are screw bolts used to install and fix the unit. Adjust the height of the leveling feet by turning the screw bolts until 2 front casters are away from the floor. [page 13]

5. Space for a temperature recorder: An optional temperature recorder is installed here [page 35]. For the installation of temperature recorder, contact our sales representative or agent.

6. Shelf (for freezer): Use to store the materials in the freezer. It is recommended to store the items on the shelf. The maximum load is 10 kg.
✧ Never touch the storage items with wet hands. Touching with the wet hands may cause frostbite.

7. Access port (left side): This port allows a sensor or cable of measuring equipment to enter the chamber from outside. Also, the capillary tube of temperature recorder is passed through the port.
✧ Replace the insulations and the rubber caps when the access port is not used. Improper replacement may cause rise of chamber temperature or condensation around the access port.

8. Air intake vent (lower back): An intake vent for circulating the air in the refrigerator chamber. Do not block this vent. Blocking this vent may cause unstable chamber temperature. Do not insert fingers or similar articles into the vent.

9. Shelf (for refrigerator): Use to store the items in the refrigerator. It is recommended to store the items on the shelf. The maximum load is 20 kg per shelf.

10. Air exhaust vent (center back): An exhaust vent for circulating the air in the refrigerator chamber. Do not block this vent. Blocking this vent may cause unstable chamber temperature. Arrange the storage items not to subject to the cold air from this vent to avoid freezing.

11. Power switch (also served as a circuit breaker): Remove 2 screws fixing the cover and the power switch that is also served as a circuit breaker is accessible. The round button on the left of the power switch is a check button for circuit breaker. The operation of the circuit breaker is checked by pressing this button.
✧ Please be advised that the power to the unit is disconnected when the check button is pressed.

REFRIGERATOR COMPONENTS

Control panel components

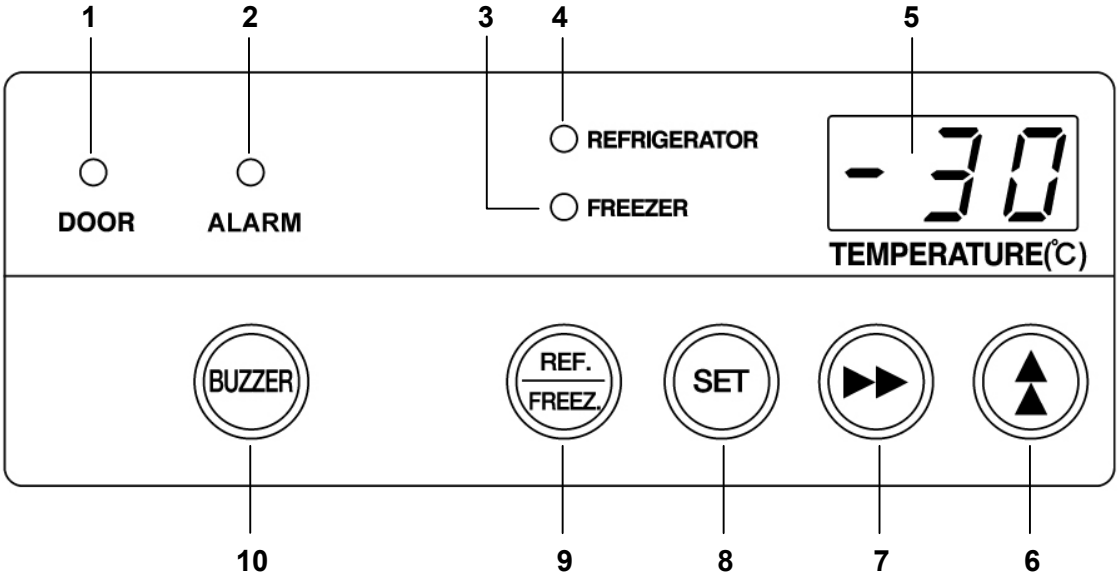

1. Door check indicator (DOOR): The red LED lamp is lit when the refrigerator door or freezer door is opened.

✧ 2 minutes after the door check indicator is lit, the alarm buzzer is activated to notice the door opening. [page 25]

2. Alarm indicator (ALARM): The red LED lamp blinks during an alarm status. [page 25]

3. Temperature display indicator for freezer (FREEZER): The green LED lamp is lit when the freezer temperature is displayed on the temperature display.

4. Temperature display indicator for refrigerator (REFRIGERATOR): The green LED lamp is lit when the refrigerator temperature is displayed on the temperature display.

5. Temperature display: Normally this shows the refrigerator or freezer temperature and during an alarm status, this shows a blinking refrigerator or freezer temperature [page 25]. And an error code and a refrigerator or freezer temperature is displayed alternately when the self diagnostic function detects any abnormality. [page 26]

6. Up arrow key (▲): Pressing this key for 5 seconds at temperature display mode causes the setting mode. Pressing this key at setting mode makes the figure on the temperature display to change.

7. Scroll key (▶▶): Pressing this key at setting mode makes the digit to be inputted on the temperature display to change. Pressing this key for 5 seconds at temperature display mode causes the setting mode for key lock.

8. Set key (SET): Pressing this key at temperature display mode enables the temperature setting [page 14]. Pressing this is at the end of setting mode memorizes the setting.

9. Temperature display changeover key (REF./FREEZ.): By pressing this key, the displayed temperature is changed alternately; current refrigerator temperature and current freezer temperature.

10. Alarm buzzer stop key (BUZZER): Pressing this key silences the alarm buzzer when the alarm buzzer sounds. But the remote alarm is not canceled.

✧ Temperature display mode: The status that the temperature display shows the refrigerator or freezer temperature.

✧ Setting mode: The status that the input on the temperature display is effective.

INSTALLATION SITE

To operate this unit properly and to obtain maximum performance, install the unit in a location with the following conditions:

✧ A location not compliance with the following conditions may cause poor performance, failure or accident.

■ A location not subjected to direct sunlight

Do not install the unit under direct sunlight. Installation in a location subjected to direct sunlight may degrade the performance.

■ A location with adequate ventilation

Leave at least 10 cm around the unit for ventilation. Poor ventilation will result in a reduction of the performance and consequently the failure.

■ A location away from heat generating sources

Avoid installing the unit near heat-emitting appliances such as a heater or a boiler etc. Heat can decrease the intended performance of the unit.

■ A location with little temperature change

Install the unit under stable ambient temperature. Installing the unit under unstable ambient temperature may result in unstable performance.

■ A location with a sturdy and level floor

Always install the unit on a sturdy and level floor withstanding the total weight of the unit. The uneven floor or tilted installation may cause failure or injury. Unstable condition may cause vibration or noise.

■ A location not prone to high humidity

Install the unit in the ambient of 80% R.H. or less humidity. Installation under high humidity may cause current leakage or electric shock.

⚠CAUTION

The unit may collect excessive frost on the evaporator if it is installed in high temperature and high humidity location. This will cause frequent defrosting.

■ A location without flammable or corrosive gas

Never install the unit in a flammable or corrosive location. This may cause explosion or fire or may result in the current leakage or electric shock by the corrosion of the electrical components.

⚠CAUTION

Never install the unit in a location where the corrosive material such as sulfur compound is likely to be generated (near a drainage facilities, etc). Corrosion of the copper pipe may result in deterioration of cooling unit and consequently the failure.

■ A location without the possibility of anything fall

Avoid installing the unit in the location where anything can fall down onto the unit. This may cause the breakdown or failure of the unit.

INSTALLATION

1. After unpackaging

Remove all transportation packaging materials and tapes. Open the doors (refrigerator and freezer) and ventilate the unit. If the outside panels are dirty, clean them with a diluted neutral dishwashing detergent.

✧ Undiluted detergent can damage the plastic components. For the dilution, refer to the instruction of the detergent.

✧ After the cleaning with the diluted detergent, always wipe it off with a wet cloth. Then wipe off the panels with a dry cloth.

Note:

Remove the cable tie banding the power supply cord. Prolonged banding may cause the corrosion of the cord coating.

2. Installing the unit

Extend the leveling feet by rotating them counterclockwise until 2 front casters separate from the floor by 5 to 10 mm. [Fig. 1]

And adjust the leveling foot to level the unit.

✧ The unit is installed firmly by separating the front casters from the floor. The unit may be moved at the time of opening/closing the door if the front casters contact with floor.

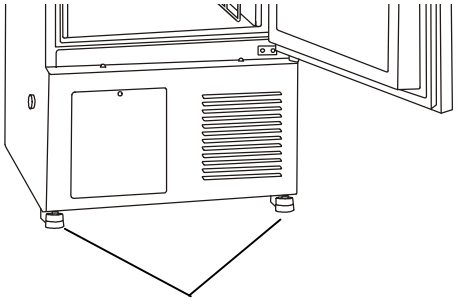

Leveling foot

Fig. 1

3. Fixing the unit

Fix the unit to the wall by using 2 back spacers and a rope or chain. [Fig. 2]

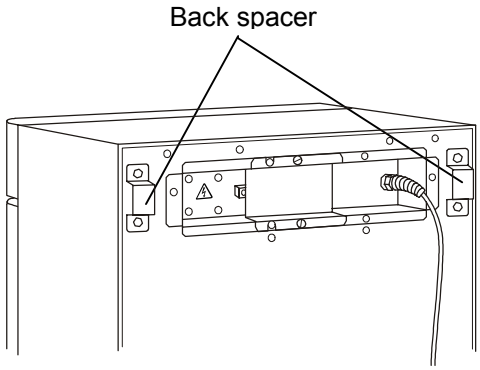

Fig. 2

4. Ground (earth) the unit

The ground (earth) is for preventing the electric shock in the case of the electrical insulation is somehow degraded. Always ground the unit at the time of installation.

✧ For a 3-prong plug with grounding pole, there is no need for electric work for grounding.

✧ If the power supply outlet is not grounded, it will be necessary to install a ground by qualified engineers.

5. Connection of remote alarm equipment

The alarm status is noticed to a remote location when a remote alarm equipment (commercial item) is connected to the remote alarm terminal. It is recommended to install a remote alarm equipment (commercial item) when the refrigerator is installed in a desolate location so that an alarm status is noticed to an operator.

✧ Contact our sales representative or agent for the installation of a remote alarm equipment (commercial item).

START-UP OF UNIT

Follow the procedures below when starting-up (initial and after stop due to the cleaning, maintenance or moving) of the unit.

✧ At the recovery from power failure, the operation is start-up automatically with the setting before power failure.

1. With the refrigerator and freezer empty, connect the power supply cord to the dedicated outlet having an appropriate rating, and turn on the power switch.

➽ The blinking refrigerator temperature is displayed on the temperature display and the alarm indicator blinks. (This is caused by high temperature alarm function and not a malfunction.)

<Important>

5 minutes is needed to re-start the compressor. Keep 5 minutes before turning on the power switch when the power switch is turned off.

2. The refrigerator temperature is set to 5°C and the freezer temperature is set to -30°C at the factory. Set the temperature of refrigerator or freezer when other temperature setting is desired. [page 15]

✧ The storage items may be frozen practically when the refrigerator temperature is set to 3°C or lower.

3. On the temperature display check the refrigerator temperature reaches 5°C and the freezer temperature reaches -30°C, or reaches the desired temperature

4. Check the lamp in the refrigerator is on by opening the refrigerator door.

5. Begin slowly placing items into the refrigerator and freezer to minimize the temperature rise.

<Important>

Do not block the air intake vent or air exhaust vent in the refrigerator. Arrange the storage items with adequate space to keep the air circulation. Too much storage items in the refrigerator makes the temperature around the air exhaust vent at -2°C when the refrigerator temperature is set to 2°C. It is recommended to set the refrigerator temperature to 4°C or 5°C when the items that should not be frozen are stored.

<Attention>

The refrigerator door has a condensation on the glass during operation. Wipe off the condensation with a dry soft cloth.

SETTING OF CHAMBER TEMPERATURE

Set the temperature of refrigerator or freezer according to the usage condition. This unit keeps the storage items for long period with adequate chamber temperature.

	Refrigerator	Freezer
Setting range	between 2 and 14°C	between -35 and -15°C
Initial setting (at factory)	5°C	-30°C

Example: Changing the refrigerator temperature to 4°C from 5°C and freezer temperature to -25°C from -30°C.

※Following shows an example. Change the setting as necessary.

	Operation	Key operated	Display after operation
1	Connect the power supply cord to the outlet and turn on the power switch. (only when start-up)	-----	The temperature display indicator for refrigerator is lit and the current refrigerator temperature is displayed with blink. 
2	Press the set key.	SET	The current setting of refrigerator (005) is displayed and the second figure 0 blinks. 
3	Press the scroll key.	▶▶	The first figure 5 blinks. 
	Change 5 to 4 by pressing the up arrow key.	▲▲	The display changes to 004 from 005. 
4	Press the set key.	SET	The setting is memorized and the current refrigerator temperature is displayed with blink. 
5	Press the temperature display changeover key to display the freezer temperature.	REF. FREEZ.	The temperature display indicator for freezer is lit and the current freezer temperature is displayed with blink. 
6	Press the set key.	SET	The current setting of freeze (-30) is displayed and the second figure 3 blinks. 
7	Change 3 to 2 by pressing the up arrow key.	▲▲	The display changes to-20 from -30. 
	Press the scroll key.	▶▶	The first figure 0 blinks. 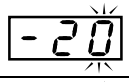
	Change 0 to 5 by pressing the up arrow key.	▲▲	The display changes to-25 from -20. 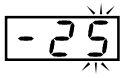
8	Press the set key.	SET	The setting is memorized and the current freezer temperature is displayed with blink. 

✧ The setting mode returns to the temperature display mode automatically when 90 seconds has passed without any key operation (auto-return function). In this case, the setting is not accepted.

⚠ CAUTION

It is recommended to install a temperature recorder (optional component) when items that need severe temperature control is stored. The maximum and minimum chamber temperature can be checked.

LOCK OF TEMPERATURE SETTING

The temperature setting of chamber can be locked to avoid accidental change. When the lock is ON, the change of refrigerator temperature and freezer temperature is unable even if the key on the control panel is operated.

■ Initial setting (at factory): Lock is OFF

Display	Lock status	Setting of chamber temperature
L 0	Lock is OFF	Enable to change the setting
L 1	Lock is ON	Unable to change the setting

Example: Changing the lock status to ON from OFF (initial setting).

	Operation	Key operated	Display after operation
1	(when during operation)	-----	The current refrigerator or freezer temperature is displayed. 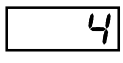
2	Press the scroll key for 5 seconds.	▶▶	The L0 is displayed and the first figure 0 blinks. 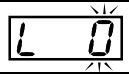
3	Press the up arrow key once.	▲▲	The display changes to L1. 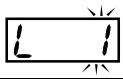
4	Press the set key	SET	The lock is ON and the current refrigerator or freezer temperature is displayed. 

✧ The setting mode returns to the temperature display mode automatically when 90 seconds has passed without any key operation (auto-return function). In this case, the setting is not accepted.

STOP OF FREEZER OPERATION

The freezer operation can be stopped when removing the frost in the freezer chamber or no use of freezer.

The current freezer temperature and OFF is displayed alternately when the temperature display indicator for freezer is lit. (Only the current refrigerator temperature is displayed when the temperature display indicator for refrigerator is lit. OFF is not displayed.)

Following shows the procedure to stop the freezer operation.

	Operation	Key operated	Display after operation
1	Press the temperature display change over key to display the freezer temperature.	REF. FREEZ.	The temperature display indicator for freezer is lit and the current freezer temperature is displayed. 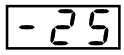
2	Press the set key.	SET	The current setting of freezer (-25) is displayed and the second figure 2 blinks. 
3	Change 2 to 0 by pressing the up arrow key.	▲	The display changes to -05 from -25. 
	Press the scroll key.	▶▶	The first figure 5 blinks. 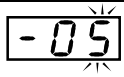
	Change 5 to 0 by pressing the up arrow key.	▲	The display changes to -00 from -05. 
4	Press the set key.	SET	The current freezer temperature and OFF is displayed alternately. (Stop of freezer operation.) 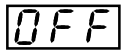

✧ The setting mode returns to the temperature display mode automatically when 90 seconds has passed without any key operation (auto-return function). In this case, the setting is not accepted.

<To resume the freezer operation>

Following shows the procedure to resume the freezer operation. The operation is resumed by setting the freezer temperature.

Example: Setting the freezer temperature to -25°C.

※Following shows an example. Change the setting as necessary.

	Operation	Key operated	Display after operation
1	Press the temperature display change over key to display the freezer temperature.	REF. FREEZ.	The current freezer temperature and OFF is displayed alternately. (No freezer operation.) 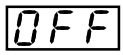
2	Press the set key.	SET	The setting before stop of operation (-00) is displayed and the second figure 0 blinks. 
3	Change 0 to 2 by pressing the up arrow key.	▲	The display changes to -20 from -00. 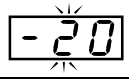
	Press the scroll key.	▶▶	The first figure 0 blinks. 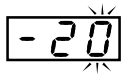
	Change 0 to 5 by pressing the up arrow key.	▲	The display changes to -25 from -20. 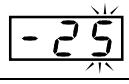
4	Press the set key.	SET	The setting is memorized and the current freezer temperature is displayed with blink. (Start of freezer operation.) 

✧ The setting mode returns to the temperature display mode automatically when 90 seconds has passed without any key operation (auto-return function). In this case, the setting is not accepted.

DEFROSTING

Defrosting of refrigerator

The following 2 types of defrosting methods is provided for the refrigerator. Both of them are controlled automatically.

● Cycle defrosting

The refrigerator temperature is kept stable by ON/OFF operation of the compressor. When the compressor is OFF (stopped), the frost on the evaporator is melted by the heater. This defrosting never influences to the refrigerator temperature.

● Defrosting by defrost sensor

The cycle defrosting may not be sufficient to remove the frost on the evaporator when the ambient temperature is high, the door is opened frequently, or heavy moist items are stored in the refrigerator. In this case, the defrosting operation is started automatically when the defrost sensor detects the frost.

During the defrosting, the current refrigerator temperature and dF is displayed alternately when the temperature display indicator for refrigerator is lit.

After completion of defrosting, dF display is disappeared and the refrigerator returns to the normal operation.

<Important>

During the defrosting, the refrigerator temperature reaches around 10°C temporary.

⚠ CAUTION

Too much frost is accumulated on the evaporator when the refrigerator is running under high temperature and humidity condition. For example, the defrosting operation is started once a week when the refrigerator is running with 2°C setting at 30°C, 80% R.H.

Defrosting of freezer

The freezer has no automatic defrosting system. Stop the freezer operation and remove the frost when the frost is accumulated in the freezer.

Following shows the procedure for defrosting.

1. Move all storage items in the freezer to other freezer.

2. Stop the freezer operation according to the procedure on page17.

✧ The current freezer temperature and OFF is displayed alternately when the temperature display indicator for freezer is lit. (Only the current refrigerator temperature is displayed when the temperature display indicator for refrigerator is lit. OFF is not displayed.)

3. When the frost is disappeared, drain the defrost water through the drain port at the bottom of the freezer. (The drained water is evaporated on the evaporating tray under the freezer.) Then, Wipe off the freezer with a dry soft cloth.

✧ Replace the cap on the drain port after drainage.

4. Start the freezer operation according to the procedure on page 14.

5. Check that the freezer temperature reaches the set temperature and replace the storage items.

SETTING OF ALARM (REFRIGERATOR)

Setting of high temperature alarm

The abnormal temperature rise is notified by the blink of alarm indicator and display of refrigerator temperature, and the alarm buzzer (15 minutes after blink) when the high temperature alarm is set. Always set the high temperature alarm to avoid the damage of storage items due to the temperature rise.

- Settable range of high temperature alarm:
  Between the set temperature of refrigerator plus 2°C and
  the set temperature of refrigerator plus 14°C
- Initial setting (at factory): the set temperature of refrigerator plus 5°C

Example: Changing the high temperature alarm to 3°C from 5°C plus the set temperature of refrigerator.
※Following shows an example. Change the setting as necessary.

	Operation	Key operated	Display after operation
1	Press the temperature display change over key to display the refrigerator temperature.	REF. FREEZ.	The temperature display indicator for refrigerator is lit and the current refrigerator temperature is displayed. 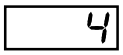
2	Press the up arrow key for 5 seconds.	▲▲	F00 is displayed and the first figure 0 blinks. 
3	Change 0 to 1 by pressing the up arrow key.	▲▲	The display changes to F01 from F00. 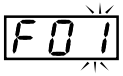
4	Press the set key.	SET	The current setting of alarm (005) is displayed and the first figure 5 blinks. 
5	Change 5 to 3 by pressing the up arrow key.	▲▲	The display changes to 003 from 005. 
6	Press the set key.	SET	The setting is memorized and the current refrigerator temperature is displayed. 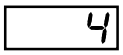

✧ The setting mode returns to the temperature display mode automatically when 90 seconds has passed without any key operation (auto-return function). In this case, the setting is not accepted.

<Important>

The alarm may be activated after defrosting or when too much items are stored in the refrigerator, depending on the setting of high temperature alarm. This is not a malfunction. The alarm is cancelled automatically when the refrigerator temperature reaches the set temperature.

SETTING OF ALARM (REFRIGERATOR)

Setting of low temperature alarm

The abnormal temperature descent is notified by the blink of alarm indicator and display of refrigerator temperature, and the alarm buzzer (15 minutes after blink) when the low temperature alarm is set. Always set the low temperature alarm to avoid the damage of storage items due to the temperature descent.

- Settable range of low temperature alarm:
  Between the set temperature of refrigerator minus 2°C and
  the set temperature of refrigerator minus 14°C
- Initial setting (at factory): the set temperature of refrigerator minus 5°C

Example: Changing the low temperature alarm to 3°C from 5°C minus the set temperature of refrigerator.
※Following shows an example. Change the setting as necessary.

	Operation	Key operated	Display after operation
1	Press the temperature display change over key to display the refrigerator temperature.	REF. FREEZ.	The temperature display indicator for refrigerator is lit and the current refrigerator temperature is displayed. 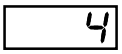
2	Press the up arrow key for 5 seconds.	▲▲	F00 is displayed and the first figure 0 blinks. 
3	Change 0 to 2 by pressing the up arrow key.	▲▲	The display changes to F02 from F00. 
4	Press the set key.	SET	The current setting of alarm (-05) is displayed and the first figure 5 blinks. 
5	Change 5 to 3 by pressing the up arrow key.	▲▲	The display changes to -03 from -05. 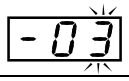
6	Press the set key.	SET	The setting is memorized and the current refrigerator temperature is displayed. 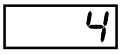

✧ The setting mode returns to the temperature display mode automatically when 90 seconds has passed without any key operation (auto-return function). In this case, the setting is not accepted.

<Important>

The abnormal temperature descent is notified by the blink of alarm indicator and display of refrigerator temperature, and the alarm buzzer (15 minutes after blink) when the refrigerator temperature is 0°C or lower with regardless the setting of low temperature alarm. In this case, the remote alarm terminal is changed to alarm status. This is a precaution against the freezing of storage items.

SETTING OF ALARM (FREEZER)

Setting of high temperature alarm

The abnormal temperature rise is notified by the blink of alarm indicator and display of freezer temperature, and the alarm buzzer (15 minutes after blink) when the high temperature alarm is set. Always set the high temperature alarm to avoid the damage of storage items due to the temperature rise.

- Settable range of high temperature alarm:
  Between the set temperature of freezer plus 5°C and
  the set temperature of freezer plus 15°C
- Initial setting (at factory): the set temperature of freezer plus 10°C

Example: Changing the high temperature alarm to 5°C from 10°C plus the set temperature of freezer.
※Following shows an example. Change the setting as necessary.

	Operation	Key operated	Display after operation
1	Press the temperature display change over key to display the freezer temperature.	REF. FREEZ.	The temperature display indicator for freezer is lit and the current freezer temperature is displayed. 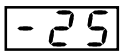
2	Press the up arrow key for 5 seconds.	▲▲	F00 is displayed and the first figure 0 blinks. 
3	Change 0 to 3 by pressing the up arrow key.	▲▲	The display changes to F03 from F00. 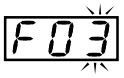
4	Press the set key.	SET	The current setting of alarm (010) is displayed and the first figure 0 blinks. 
5	Change 0 to 5 by pressing the up arrow key.	▲▲	The display changes to 015 from 010. 
	Press the scroll key.	▶▶	The second figure 1 blinks. 
	Change 1 to 0 by pressing the up arrow key.	▲▲	The display changes to 005 from 015. 
6	Press the set key.	SET	The setting is memorized and the current freezer temperature is displayed. 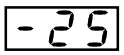

✧ The setting mode returns to the temperature display mode automatically when 90 seconds has passed without any key operation (auto-return function). In this case, the setting is not accepted.

SETTING OF ALARM (FREEZER)

Setting of low temperature alarm

The abnormal temperature descent is notified by the blink of alarm indicator and display of freezer temperature, and the alarm buzzer (15 minutes after blink) when the low temperature alarm is set. Always set the low temperature alarm to avoid the damage of storage items due to the temperature descent.

- Settable range of low temperature alarm:
  Between the set temperature of freezer minus 5°C and
  the set temperature of freezer minus 15°C
- Initial setting (at factory): the set temperature of freezer minus 10°C

Example: Changing the low temperature alarm to 5°C from 10°C minus the set temperature of freezer.
※Following shows an example. Change the setting as necessary.

	Operation	Key operated	Display after operation
1	Press the temperature display change over key to display the freezer temperature.	REF. FREEZ.	The temperature display indicator for freezer is lit and the current freezer temperature is displayed. 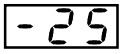
2	Press the up arrow key for 5 seconds.	▲▲	F00 is displayed and the first figure 0 blinks. 
3	Change 0 to 4 by pressing the up arrow key.	▲▲	The display changes to F04 from F00. 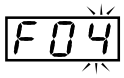
4	Press the set key.	SET	The current setting of alarm (-10) is displayed and the first figure 0 blinks. 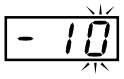
5	Change 0 to 5 by pressing the up arrow key.	▲▲	The display changes to -15 from -10. 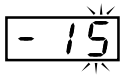
	Press the scroll key.	▶▶	The second figure 1 blinks. 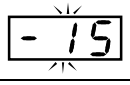
	Change 1 to 0 by pressing the up arrow key.	▲▲	The display changes to -05 from -15. 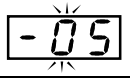
6	Press the set key.	SET	The setting is memorized and the current freezer temperature is displayed. 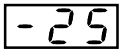

✧ The setting mode returns to the temperature display mode automatically when 90 seconds has passed without any key operation (auto-return function). In this case, the setting is not accepted.

SETTING OF ALARM BUZZER RECOVERY

The alarm buzzer recovers and notifies the abnormality again after preset period (alarm buzzer recovery time) if the same alarm status is continued after the alarm buzzer is stopped by pressing the alarm buzzer stop key (BUZZER). Always set the alarm buzzer recovery time to avoid the false recognition of alarm status.

- Settable range of alarm buzzer recovery time:
  10 minutes interval between 10 and 60 minutes (setting; between 010 and 060) or
  No recovery (setting; 000)
- Initial setting (at factory): 30 minutes

The alarm buzzer never recovers once the alarm buzzer is silenced by pressing the alarm buzzer stop key (BUZZER) if the alarm buzzer recovery time is set to 000 (no recovery). Nevertheless, the alarm buzzer sounds when other alarm status is detected.

Example: Changing the alarm buzzer recovery time to 20 minutes from 30 minutes.
※Following shows an example. Change the setting as necessary.

	Operation	Key operated	Display after operation
1			The current refrigerator or freezer temperature is displayed. 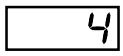
2	Press the up arrow key for 5 seconds.	▲▲	F00 is displayed and the first figure 0 blinks. 
3	Change 0 to 5 by pressing the up arrow key.	▲▲	The display changes to F05 from F00. 
4	Press the scroll key.	▶▶	The second figure 0 blinks. 
5	Change 0 to 2 by pressing the up arrow key.	▲▲	The display changes to F25 from F05. 
6	Press the set key.	SET	The current setting of recovery (030) is displayed and the second figure 3 blinks. 
7	Change 3 to 2 by pressing the up arrow key.	▲▲	The display changes to 020 from 030. 
8	Press the set key.	SET	The setting is memorized and the current refrigerator or freezer temperature is displayed. 

✧ The setting mode returns to the temperature display mode automatically when 90 seconds has passed without any key operation (auto-return function). In this case, the setting is not accepted.
✧ Do not set the alarm buzzer recovery time during the alarm status.

OPERATION CHECK AFTER RECOVERY

After recovery from a power failure, the unit will resume operation automatically with the setting (refrigerator temperature, freezer temperature, lock of temperature setting, alarm temperature, alarm buzzer recovery time) before power failure. Accordingly, there is no need for re-set however, always check the running status after recovery.

✧ The setting is memorized by nonvolatile memory during power failure.

⚠ CAUTION

After recovery from a power failure, always check the unit starts the operation normally with the setting before power failure.

ALARM FUNCTIONS

This unit has the alarm functions shown below.
Contact our sales representative or agent after moving the storage items to other refrigerator or freezer if the alarm status continues because there is a possibility of any failure.

Alarms	Situation	Indication	Alarm buzzer	Remote alarm terminal
High temperature alarm	<Refrigerator> The refrigerator temperature reaches the setting of high temperature alarm.	Alarm indicator blinks. Displayed temp. blinks. (when the refrigerator temperature is displayed.)	Intermittent tone with 15 minutes delay	Alarm status with 15 minutes delay
	<Freezer> The freezer temperature reaches the setting of high temperature alarm.	Alarm indicator blinks. Displayed temp. blinks. (when the freezer temperature is displayed.)		
Low temperature alarm	<Refrigerator> The refrigerator temperature reaches the setting of low temperature alarm.	Alarm indicator blinks. Displayed temp. blinks. (when the refrigerator temperature is displayed.)	Intermittent tone with 15 minutes delay	Alarm status with 15 minutes delay
	<Freezer> The freezer temperature reaches the setting of low temperature alarm.	Alarm indicator blinks. Displayed temp. blinks. (when the freezer temperature is displayed.)		
0°C alarm (refrigerator only)	The refrigerator temperature reaches 0°C.	Alarm indicator blinks. Displayed temp. blinks. (when the refrigerator temperature is displayed.)	Intermittent tone	Alarm status.
Power failure alarm	Power failure. The power supply cord is disconnected. The power switch is off.	-----	-----	Alarm status.
Door alarm	The refrigerator or freezer door is open.	Door check indicator lights.	Intermittent tone with 2 minutes delay.	-----

✧ The remote alarm terminal is in alarm status in conjunction with the alarm buzzer. However, the alarm status of the remote alarm terminal is not cancelled by pressing the alarm buzzer stop key (BUZZER).

SAFETY FUNCTIONS

This unit has the safety functions shown below.

Safety	Situation	Indication and alarm buzzer	Safety operation
Over-heat Protection (refrigerator only)	The refrigerator temperature is higher than about 28°C.	-----	The defrost heater is off to avoid the temperature rise.
Over-cool protection (refrigerator only)	The refrigerator temperature is lower than about 0°C.	-----	Compressor is off to avoid the temperature descent.
Auto-return	There is no key pressing for 90 seconds in the setting mode.	-----	The setting mode is returned to the temperature display mode.
Key lock	The key lock is ON (L1).	-----	Change of temperature setting is disable.

SELF DIAGNOSTIC FUNCTIONS

This unit has the self diagnostic functions shown below.
Contact our sales representative or agent if an error code (ex. E01) is displayed resulting from the self diagnostic.

Self diagnostic	Situation	Indication	Alarm buzzer	Remote alarm terminal
Sensor abnormality	The thermal sensor for refrigerator is disconnected.	Alarm indicator blinks. E01 and -50 or freezer temp. is displayed alternately.	Intermittent tone	Alarm status
	The thermal sensor for refrigerator is short-circuited.	Alarm indicator blinks. E02 and 50 or freezer temp. is displayed alternately.		
	The thermal sensor for freezer is disconnected.	Alarm indicator blinks. E03 and -50 or refrigerator temp. is displayed alternately.		
	The thermal sensor for freezer is short-circuited.	Alarm indicator blinks. E04 and 50 or refrigerator temp. is displayed alternately.		
	The defrost sensor is disconnected.	Alarm indicator blinks. E05 and refrigerator or freezer temp. is displayed alternately.		
	The defrost sensor is short-circuited.	Alarm indicator blinks. E06 and refrigerator or freezer temp. is displayed alternately.		
	The alarm sensor is disconnected.	Alarm indicator blinks. E07 and refrigerator or freezer temp. is displayed alternately.		
	The alarm sensor is short-circuited.	Alarm indicator blinks. E08 and refrigerator or freezer temp. is displayed alternately.		
	The protective sensor for compressor is disconnected.	Alarm indicator blinks. E11 and refrigerator or freezer temp. is displayed alternately.		
	The protective sensor for compressor is short-circuited.	Alarm indicator blinks. E12 and refrigerator or freezer temp. is displayed alternately.		
Fan motor check	About 6 years have passed with the power switch on. (time to replace the fan motor)	F2 and refrigerator or freezer temp. is displayed alternately.	-----	-----
Temperature abnormality in the cooling circuit	The fan motor for cooling circuit fails.	Alarm indicator blinks. E10 and refrigerator or freezer temp. is displayed alternately.	Intermittent tone	Alarm status

✧ The remote alarm terminal is in alarm status in conjunction with the alarm buzzer. However, the alarm status of the remote alarm terminal is not cancelled by pressing the alarm buzzer stop key (BUZZER).

✧ Contact our sales representative or agent for the replacement of the fan motor if the error code F2 is displayed.

ROUTINE MAINTENANCE

⚠ WARNING

Always disconnect the power supply to the unit prior to any repair or maintenance of the unit in order to prevent electric shock or injury.

Ensure you do not inhale or consume medication or aerosols from around the unit at the time of maintenance. These may be harmful to your health.

Cleaning of exterior, interior, and accessories

Use a dry cloth to wipe off small amounts of dirt on the outside and inside of the unit and all accessories.
If the outside panels are dirty, clean them with a diluted neutral dishwashing detergent.
Wipe off the condensation on the glass or exterior of the cabinet with a dry soft cloth.

✧ Undiluted detergent can damage the plastic components. For the dilution, refer to the instruction of the detergent.

✧ After the cleaning with the diluted detergent, always wipe it off with a wet cloth. Then wipe off the cabinet or accessories with a dry cloth.

<Important> Never pour water onto or into the unit. This may cause electric shock or failure.

⚠ CAUTION

Do not use a brush, an acid, a thinner, a laundry soap, a powder detergent, boiling water for cleaning. These cause damage of painted surface or failure of plastic and rubber components. Also, do not wipe the plastic and rubber components by a volatile material.

ROUTINE MAINTENANCE

Replacement of lamp

Replace the lamp (bulb) by following the procedure below when the lamp is blown. The lamp is located at the upper right corner of the refrigerator. [Fig. 1]

1. Turn off the power switch and then disconnect the power supply cord.

2. Move the storage items on the top shelf.

3. Hold the both sides of the lamp cover by hand and lift and pull toward you with the both sides pushed inward a little to remove the lamp cover. [Fig. 2]

4. Remove the bulb from the socket by turning it counterclockwise. [Fig. 3]

5. Install a new bulb to the socket and then replace the lamp cover.

✧ Pay attention to the upside and downside direction of the lamp cover.

<Bulb for replacement>

Incandescent lamp (T22 E17) 110 V or 125 V, 10 W

6. Replace the storage items to the top shelf.

7. Connect the power supply cord to the outlet and turn on the power switch.

<Important>

5 minutes is needed to re-start the compressor. Keep 5 minutes before turning on the power switch when the power switch is turned off.

8. Open the refrigerator door to check the lamp is on.

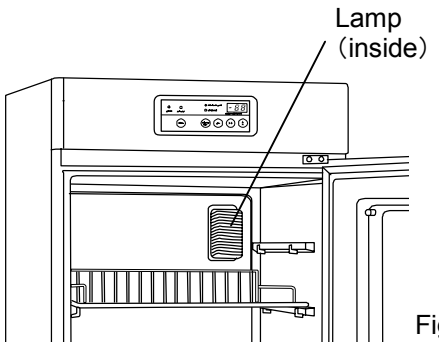

Fig. 1

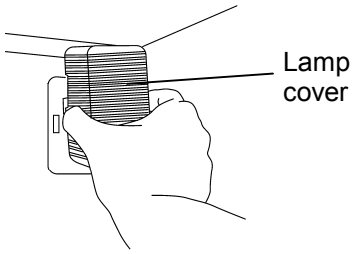

Fig. 2

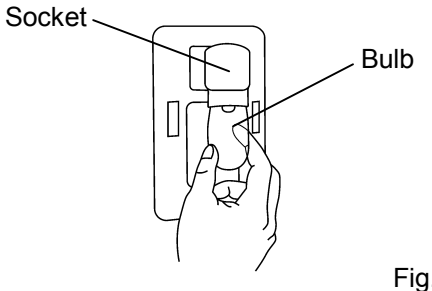

Fig. 3

TROUBLESHOOTING

If the unit malfunctions, check out the following before calling for service.

<Attention>
If the malfunction is not eliminated after checking the following items or the malfunction is not shown in the table below, contact our sales representative or agent.

Malfunction	Check/Remedy
If nothing operates even when plugged in	□ The unit is not connected to the power supply properly. □ The capacity and voltage of power supply is not sufficient. □ There is a power failure. □ The circuit breaker on the supply circuit is activated. → A breaker of 15 A or more is recommended.
The alarm is activated at start-up	✧ The alarm status is kept until the refrigerator temperature reaches the set temperature. ➢ The alarm buzzer recovers after 30 minutes even if the alarm buzzer is silenced by pressing the alarm buzzer stop key (BUZZER).
The alarm is activated during operation	□ The door (refrigerator or freezer) was kept opened for a long time. □ The door (refrigerator or freezer) is opened. □ An error code is displayed on the temperature display. [page 26] → Contact our sales representative or agent.
Noisy	□ The floor is not sturdy. □ The installation site is not level. □ The unit is tilted. □ The cabinet contacts the surrounding wall.
When the refrigerator or freezer does not get cold enough	□ The door (refrigerator or freezer) is frequently opened. □ The unit is in direct sunlight. □ The ventilation around the unit is blocked. □ There is a nearby heat source. □ The ambient temperature is too high. → The allowable ambient temperature is between -5 and 30°C. □ The storage items are too much. □ The air exhaust vent is blocked up with storage items. □ The access port is not covered. → The access port should be covered with the insulation and rubber caps when no use. □ The door gasket is damaged. → If it is damaged, contact our sales representative or agent for replacement. □ Any foreign substance is located between door gaskets.

DISPOSAL OF UNIT

⚠ WARNING

If the unit is to be stored unused in an unsupervised area for an extended period **ensure that children do not have access and doors that doors are locked completely with a key.**

The disposal of the unit should be accomplished by appropriate personnel. Always remove doors to prevent accidents such as suffocation.

Decontamination of chamber

Before disposal of unit, decontaminate the refrigerator and freezer chamber yourself.

DISPOSAL OF UNIT

Note:
This symbol mark and recycle system are applied only to EU countries and not applied to the countries in the other area of the world.

Waste Electrical and Electronic Equipment (WEEE) Directive-2002/96/EC

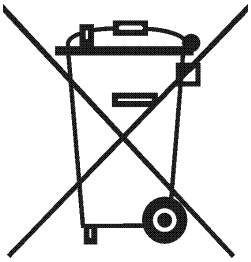

(English)
Your Panasonic product is designed and manufactured with high quality materials and components which can be recycled and reused.

This symbol means that electrical and electronic equipment, at their end-of-life, should be disposed of separately from your household waste.

Please dispose of this equipment at your local community waste collection/recycling centre.

In the European Union there are separate collection systems for used electrical and electronic products.

Please help us to conserve the environment we live in!

(German)
Ihr Panasonic Produkt wurde entworfen und hergestellt mit qualitativ hochwertigen Materialien und Komponenten, die recycelt und wiederverwendet werden können.

Dieses Symbol bedeutet, daß elektrische und elektronische Geräte am Ende ihrer Nutzungsdauer von Hausmüll getrennt entsorgt werden sollen.

Bitte entsorgen Sie dieses Gerät bei Ihrer örtlichen kommunalen Sammelstelle oder im Recycling Centre.

In der Europäischen Union gibt es unterschiedliche Sammelsysteme für Elektrik- und Elektronikgeräte.

Helfen Sie uns bitte, die Umwelt zu erhalten, in der wir leben!

DISPOSAL OF UNIT

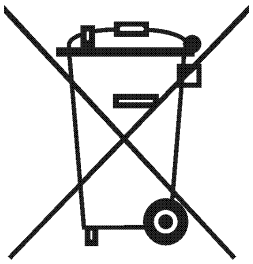

(French)
Votre produit Panasonic est conçu et fabriqué avec des matèriels et des composants de qualité supérieure qui peuvent être recyclés et réutilisés.

Ce symbole signifie que les équipements électriques et électroniques en fin de vie doivent être éliminés séparément des ordures ménagères.

Nous vous prions donc de confier cet équipement à votre centre local de collecte/recyclage.
Dans l'Union Européenne, il existe des systèmes sélectifs de collecte pour les produits électriques et électroniques usagés.

Aidez-nous à conserver l'environnement dans lequel nous vivons !

Les machines ou appareils électriques et électroniques contiennent fréquemment des matières qui, si elles sont traitées ou éliminées de manière inappropriée, peuvent s'avérer potentiellement dangereuses pour la santé humaine et pour l'environnement.
Cependant, ces matières sont nécessaires au bon fonctionnement de votre appareil ou de votre machine. Pour cette raison, il vous est demandé de ne pas vous débarrasser de votre appareil ou machine usagé avec vos ordures ménagères.

(Spanish)
Los productos Panasonic están diseñados y fabricados con materiales y componentes de alta calidad, que pueden ser reciclados y reutilizados.

Este símbolo significa que el equipo eléctrico y electrónico, al final de su ciclo de vida, no se debe desechar con el resto de residuos domésticos.

Por favor, deposite su viejo "televisor" en el punto de recogida de residuos o contacte con su administración local.

En la Unión Europea existen sistemas de recogida específicos para residuos de aparatos eléctricos y electrónicos.

Por favor, ayúdenos a conservar el medio ambiente!

DISPOSAL OF UNIT

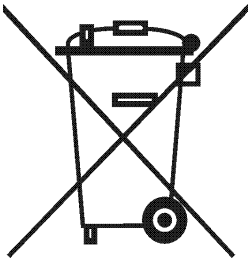

(Portuguese)
O seu produto Panasonic foi concebido e produzido com materiais e componentes de alta qualidade que podem ser reciclados e reutilizados.

Este símbolo significa que o equipamento eléctrico e electrónico no final da sua vida útil deverá ser descartado separadamente do seu lixo doméstico.

Por favor, entregue este equipamento no seu ponto local de recolha/reciclagem.

Na União Europeia existem sistemas de recolha separados para produtos eléctricos e electrónicos usados.

Por favor, ajude-nos a conservar o ambiente em que vivemos!

(Italian)
Il vostro prodotto Panasonic è stato costruito da materiali e componenti di alta qualità, che sono riutilizzabili o riciclabili.

Prodotti elettrici ed elettronici portando questo simbolo alla fine dell'uso devono essere smaltiti separatamente dai rifiuti casalinghi.

Vi preghiamo di smaltire questo apparecchio al deposito comunale.
Nell'Unione Europea esistono sistemi di raccolta differenziata per prodotti elettrici ed elettronici.

Aiutateci a conservare l'ambiente in cui viviamo!

DISPOSAL OF UNIT

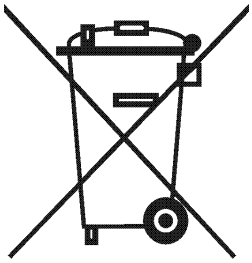

(Dutch)
Panasonic producten zijn ontwikkeld en gefabriceerd uit eerste kwaliteit materialen, de onderdelen kunnen worden gerecycled en weer worden gebruikt.

Het symbool betekent dat de elektrische en elektronische onderdelen wanneer deze vernietigd gaan worden , dit separaat gebeurt van het normale huisafval.

Zorg ervoor dat het verwijderen van de apparatuur bij de lokaal erkende instanties gaat gebeuren.
In de Europese Unie wordt de gebruikte elektrische en elektronische apparatuur bij de daarvoor wettelijke instanties aangeboden.

Alstublieft help allen mee om het milieu te beschermen.

(Swedish)
Din Panasonic produkt är designad och tillverkad av material och komponenter med hög kvalitet som kan återvinnas och återanvändas.

Denna symbol betyder att elektriska och elektroniska produkter, efter slutanvändande, skall sorteras och lämnas separat från Ditt hushållsavfall.

Vänligen, lämna denna produkt hos Din lokala mottagningstation för avfall/återvinningsstation.

Inom den Europeiska Unionen finns det separata återvinningssystem för begagnade elektriska och elektroniska produkter.

Vänligen, hjälp oss att bevara miljön vi lever i!

OPTIONAL COMPONENT

Temperature recorder

To record the chamber temperature, an optional temperature recorder (3 types) is available. Contact our sales representative or agent for the installation of temperature recorder.

The available temperature recorder and its location for installation are as follows:

Temp. recorder	Application	Location (see figure below)	Recorder fixing
MTR-0621LH	For refrigerator	Front left of top panel, or	Fixing enclosed with the temp. recorder
		Lower left of front panel (In the case of no use of MTR-4015LH)	MPR-S30
MTR-4015LH	For freezer	Lower left of front panel	MPR-S30
MTR-G3504A or MTR-G3504C	For both refrigerator and freezer	Lower left of front panel	MPR-S7

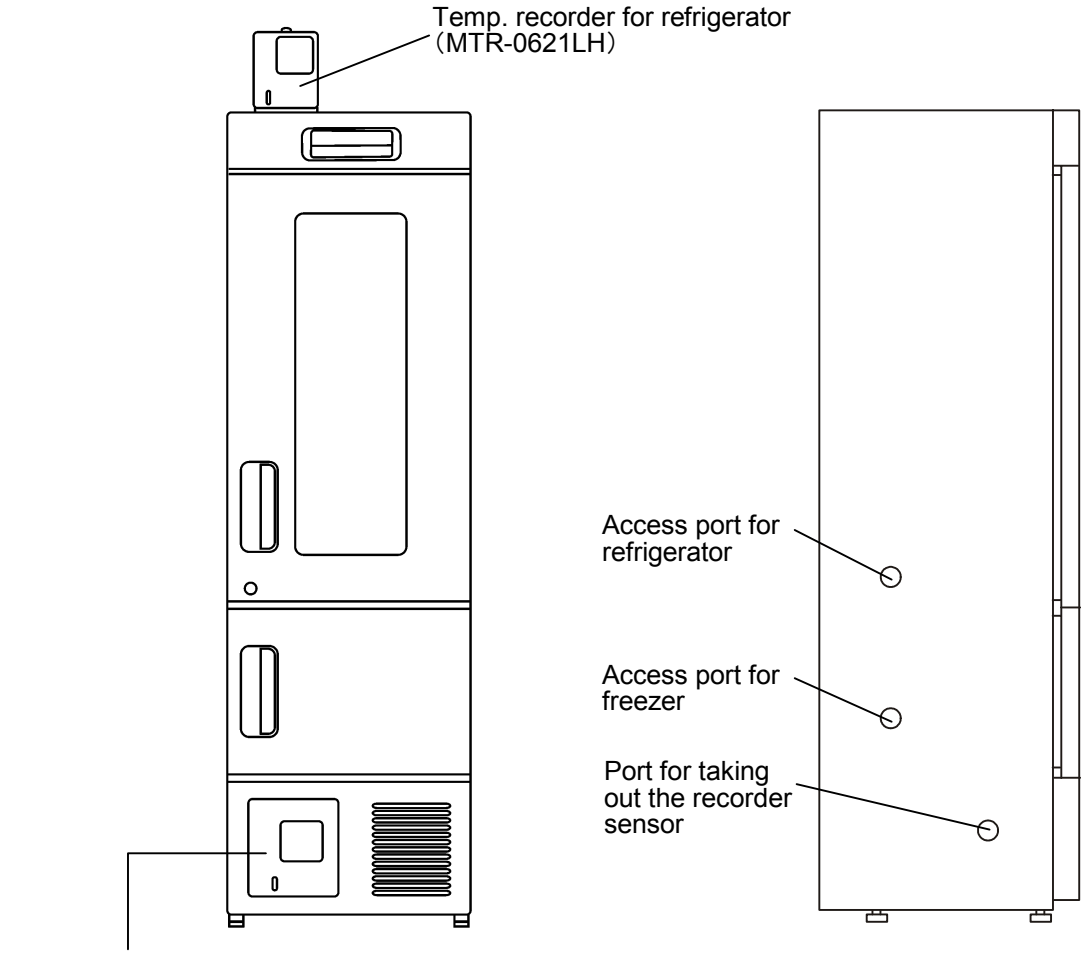

⚠ WARNING

Always disconnect the power supply to the unit before starting the installation of recorder to prevent electric shock or injury.

OPTIONAL COMPONENT

Installation of MTR-0621LH (1)

1. Attach the recorder fixing to the temperature recorder (MTR-0621LH) by referring to the instruction manual enclosed with the temperature recorder. [Fig. 1]

2. Remove 2 (outside) of 4 screws on the front left of the top panel. Fix the temperature recorder to the top panel by using the 2 removed screws. [Fig. 2]

3. Remove the caps (both outside and inside) covering the access port for refrigerator and take out the thermal insulation in the access port. Pass the recorder sensor to the refrigerator through the access port [Fig. 3]. Then replace the thermal insulation and caps (both outside and inside).

✧ Make a cut on the caps for access port to pass the capillary tube as shown in the Fig. 4.

4. Fix the recorder sensor to the attachment hole on the back side of the refrigerator by using the large clips provided as an accessory. [Fig. 5]

5. Arrange the capillary tube so that it cannot contact the shelf.

✧ Care should be taken for the following points to avoid the crush of the tube when bending the capillary tube.

・Do not bend the capillary tube for 30 mm from the edge of the recorder sensor.

・Do not bend and extend the capillary tube repeatedly at the same point.

・The bending should be R10～R15.

6. Operate the unit until the refrigerator temperature gets to the set temperature. Check the recorded temperature and refrigerator temperature displayed on the control panel. Adjust the zero adjustment volume on the temperature recorder so that the recorded temperature can corresponds with the displayed temperature if they are not compliance each other.

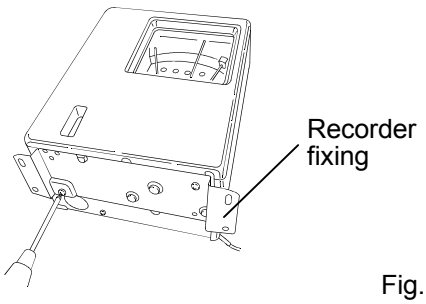

Fig. 1

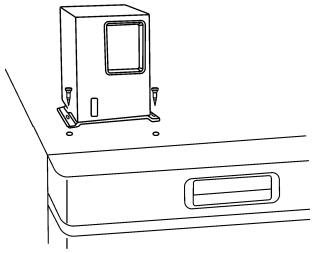

Fig. 2

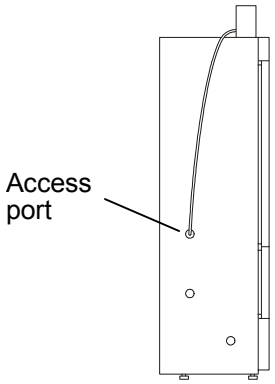

Fig. 3

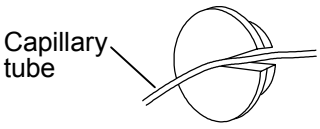

Fig. 4

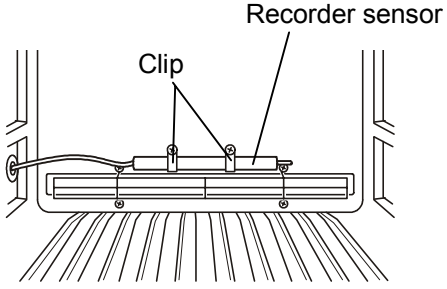

Fig. 5

OPTIONAL COMPONENT

Installation of MTR-0621LH (2)

1. Remove a cap for the fixing screw on the panel cover for mounting space of temperature recorder. Remove the fixing screw and open the panel cover. Remove the panel cover by pushing the shaft on both sides outward. [Fig. 1]

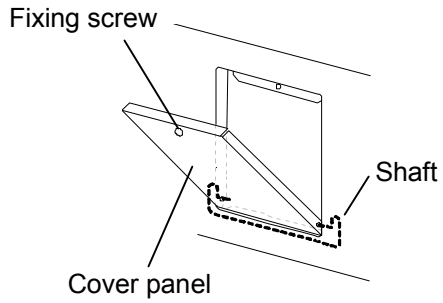

Fig. 1

2. Attach the temperature recorder (MTR-0621LH) to the recorder fixing (MPR-S30) by referring to the instruction manual enclosed with the recorder fixing. [Fig. 2]

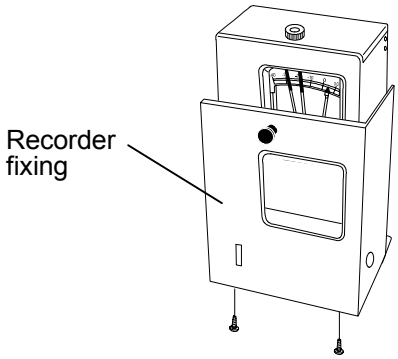

Fig. 2

3. Remove the cap on the port for taking out the recorder sensor and take out the recorder sensor. Then set the temperature recorder with recorder fixing to the space for temperature recorder. [Fig. 3]

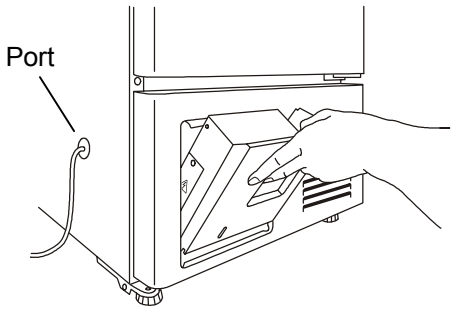

Fig. 3

OPTIONAL COMPONENT

4. Remove the caps (both outside and inside) covering the access port for refrigerator and take out the thermal insulation in the access port. Pass the recorder sensor to the refrigerator through the access port [Fig. 4]. Then replace the thermal insulation and caps (both outside and inside). Also, replace the cap on the port for taking out the recorder sensor.

✧ Make a cut on the caps to pass the capillary tube as shown in the Fig. 5.

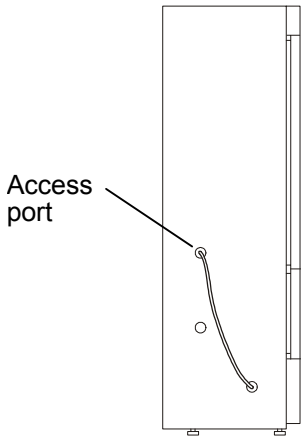

Fig. 4

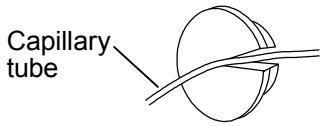

Fig. 5

5. Fix the recorder sensor to the attachment hole on the back side of the refrigerator by using the large clips enclosed with the recorder fixture (MPR-S30). [Fig. 6]

6. Arrange the capillary tube so that it cannot contact the shelf.

✧ Care should be taken for the following points to avoid the crush of the tube when bending the capillary tube.

・Do not bend the capillary tube for 30 mm from the edge of the sensor.

・Do not bend and extend the capillary tube repeatedly at the same point.

・The bending should be R10～R15.

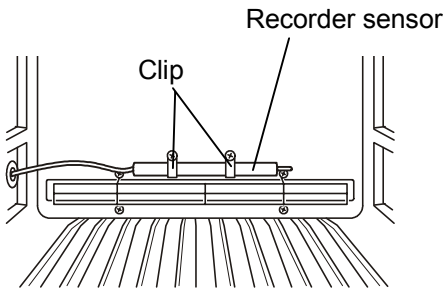

Fig. 6

7. Operate the unit until the refrigerator temperature gets to the set temperature. Check the recorded temperature and refrigerator temperature displayed on the control panel. Adjust the zero adjustment volume on the temperature recorder so that the recorded temperature can corresponds with the displayed temperature if they are not compliance each other.

OPTIONAL COMPONENT

Installation of MTR-4015LH

1. Remove a cap for the fixing screw on the panel cover for mounting space of temperature recorder. Remove the fixing screw and open the panel cover. Remove the panel cover by pushing the shaft on both sides outward. [Fig. 1]

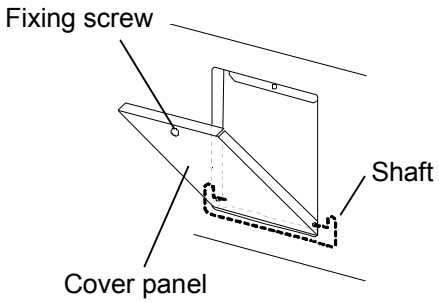

Fig. 1

2. Attach the temperature recorder (MTR-4015LH) to the recorder fixing (MPR-S30) by referring to the instruction manual enclosed with the recorder fixing. [Fig. 2]

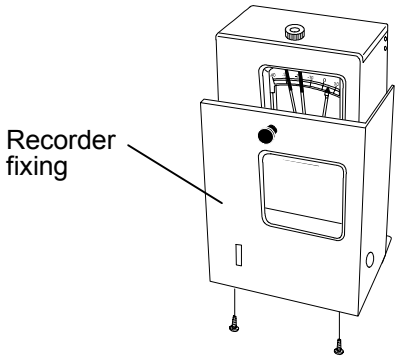

Fig. 2

3. Remove the cap on the port for taking out the recorder sensor and take out the recorder sensor. Then set the temperature recorder with recorder fixing to the space for temperature recorder. [Fig. 3]

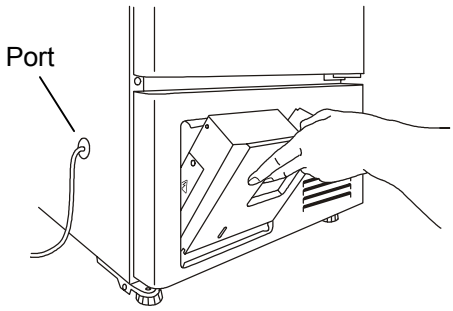

Fig. 3

OPTIONAL COMPONENT

4. Remove the caps (both outside and inside) covering the access port for freezer and take out the thermal insulation in the port. Pass the recorder sensor to the freezer through the access port [Fig. 4]. Then replace the thermal insulation and caps (both outside and inside). Also, replace the cap on the port for taking out the recorder sensor.

✧ Make a cut on the caps to pass the capillary tube as shown in the Fig. 5.

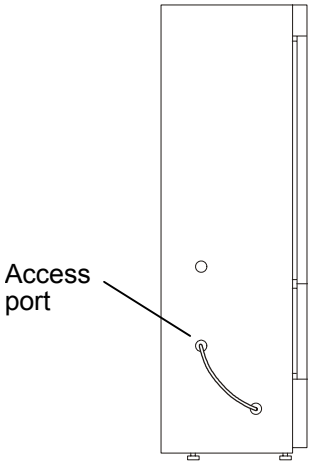

Fig.4

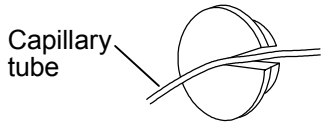

Fig. 5

5. Fix the recorder sensor to the attachment hole on the left side of the freezer by using the middle size clips enclosed with the recorder fixture (MPR-S30) [Fig. 6].

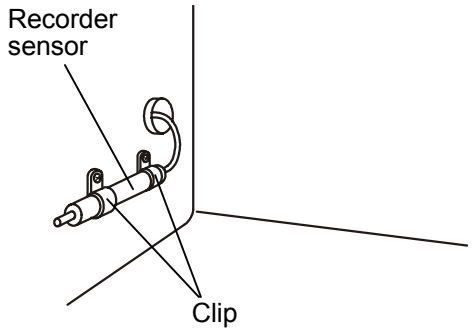

Fig. 6

6. Arrange the capillary tube so that it cannot contact the shelf.

✧ Care should be taken for the following points to avoid the crush of the tube when bending the capillary tube.

・Do not bend the capillary tube for 30 mm from the edge of the sensor.

・Do not bend and extend the capillary tube repeatedly at the same point.

・The bending should be R10～R15.

7. Operate the unit until the freezer temperature gets to the set temperature. Check the recorded temperature and freezer temperature displayed on the control panel. Adjust the zero adjustment volume on the temperature recorder so that the recorded temperature can corresponds with the displayed temperature if they are not compliance each other.

OPTIONAL COMPONENT

Installation of MTR-G3504A or MTR-G3504C

1. Remove a cap for the fixing screw on the panel cover for mounting space of temperature recorder. Remove the fixing screw and open the panel cover. Remove the panel cover by pushing the shaft on both sides outward. [Fig. 1]

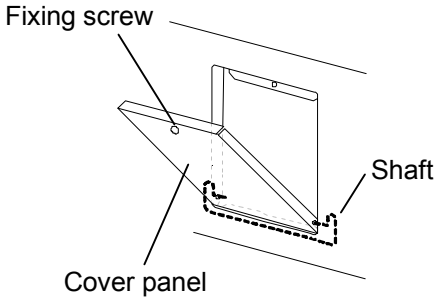

Fig. 1

2. Attach the temperature recorder (MTR-G3504A or MTR-G3504C) to the recorder fixing (MPR-S7) by referring to the instruction manual enclosed with the recorder fixture. [Fig. 2]

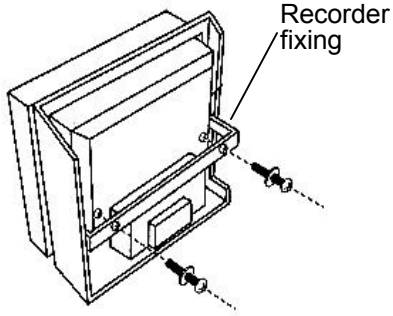

Fig. 2

3. Remove the connector cover on the unit by pushing the lock under the cover. Connect the power supply connector of the temperature recorder with the connector on the unit. [Fig.3]

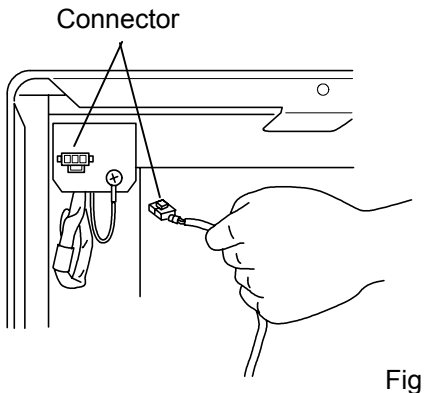

Fig. 3

4. Remove the cap on the port for taking out the recorder sensor and take out the recorder sensor. Then set the temperature recorder with the recorder fixing to the space for temperature recorder. [Fig. 4]

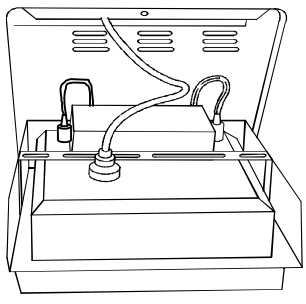

Fig. 4

OPTIONAL COMPONENT

5. Remove the caps (both outside and inside) covering the access port for refrigerator and freezer and take out the thermal insulation in the port. Pass the recorder sensor to the chamber through each port [Fig. 5]. Then replace the thermal insulation and caps (both outside and inside). Also, replace the cap on the port for taking out the recorder sensor.

✧ The identification label is adhered to the lead wire to distinguish between the sensor for refrigerator and for freezer.

✧ Make a cut on the caps for port to pass the lead wire as shown in the Fig. 6.

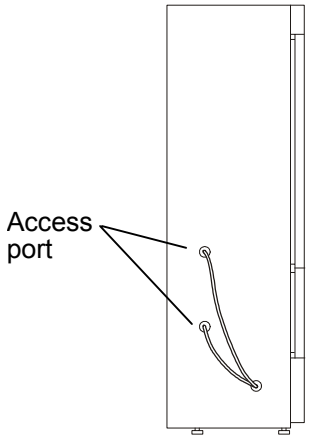

Fig. 5

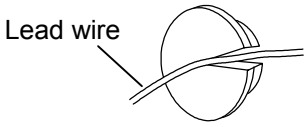

Fig. 6

6. Fix the recorder sensor for refrigerator to the attachment hole on the back side of the refrigerator by using the clips enclosed with the recorder fixture (MPR-S7) [Fig. 7].

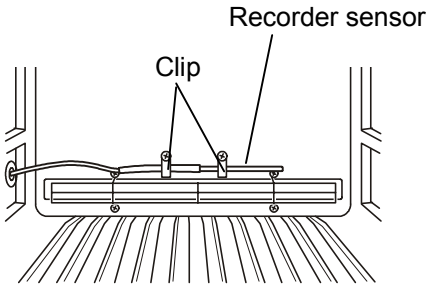

Fig. 7

7. Fix the recorder sensor for freeze to the attachment hole on the left side of the freezer by using the clips enclosed with the recorder fixture (MPR-S7) [Fig. 8].

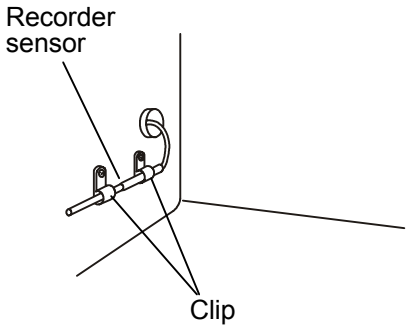

Fig. 8

8. Operate the unit until the chamber (refrigerator and freezer) temperature gets to the set temperature. Check the recorded temperature and chamber (refrigerator and freezer) temperature displayed on the control panel. Adjust the zero adjustment volume on the temperature recorder so that the recorded temperature can corresponds with the displayed temperature if they are not compliance each other.

SPECIFICATIONS

Product name		Pharmaceutical refrigerator MPR-215F
External dimensions		W540 mm x D557 mm + (45)* mm x H1794 mm * projection
Internal dimensions		W455 mm x D466 mm x H917 mm <Refrigerator> W420 mm x D342 mm x H267 mm <Freezer>
Effective capacity		176 L (Refrigerator), 39 L (Freezer)
Exterior		Painted steel
Interior		Styrene resin (Refrigerator), Colored aluminum (Freezer)
Door		Painted steel, Provided with glass window (Refrigerator)
Insulation		Rigid polyurethane foamed-in place
Shelf	Refrigerator	Hard steel wire on polyethylene coating x 5, Allowable load; 20 kg/shelf Inner dimensions; W388 mm x D325 mm
	Freezer	Hard steel wire on polyethylene coating x 1, Allowable load; 10 kg/shelf Inner dimensions; W327 mm x D250 mm
Access port		Inner diameter; 30 mm, Left side (refrigerator and freezer)
Cooling method		Forced air circulation (refrigerator), Direct cooling (freezer)
Compressor		Hermetic reciprocating type, Output; 55 W x 2
Evaporator		Fin and tube type (refrigerator), Tube on sheet type (Freezer)
Condenser		Wire and tube (Refrigerator), Frame pipe (Freezer)
Refrigerant		R-134a
Defrosting		Cycle defrost and forced defrost (refrigerator) Natural defrost by stopping operation (Freezer)
Defrost heater		46.3 W (refrigerator)
Temperature controller		Electronic control system
Temperature display		Digital display (in 1°C increments)
Thermal sensor		Thermister sensor
Alarms		High temp. alarm, Low temp. alarm, 0°C alarm (refrigerator only), Door alarm, Power failure alarm (remote alarm only)
Safety functions		Over-heat protection (refrigerator only), Over-cool protection (refrigerator only), Key lock, Auto-return
Self diagnostic		Thermal sensor abnormality, Fan motor check
Memory backup		Nonvolatile memory
Lamp		Incandescent lamp (T22 E17) 110 V or 125 V, 10 W x 1 (refrigerator)
Weight		86 kg
Accessories		1 set of key, 2 large clips (for temperature recorder)
Optional components		Temperature recorder for refrigerator (MTR-0621LH) Temperature recorder for freezer (MTR-4015LH), Recorder fixing for MTR-4015LH (MPR-S30), Temperature recorder for refrigerator & freezer (MTR-G3504A or MTR-G3504C), Recorder fixing for MTR-G3504 or MTR-G3504C(MPR-S7) Data acquisition system (MTR-5000) Interface board (MTR-480, MTR-L03)

✧ Design or specifications will be subject to change without notice.

✧ Refer to the updated catalog when ordering an optional component.

PERFORMANCE

Product name	Pharmaceutical Refrigerator MPR-215F			
Model number	MPR-215F-PT	MPR-215F-PA	MPR-215F-PK	MPR-215F-PE
Temperature control range	Refrigerator: between 2 and 14°C (ambient temp.; -5 to 30°C, no load) Freezer: between -20 and -30°C (ambient temp.; -5 to 30°C, no load)			
Noise level	35/36 dB (A scale) (50 Hz/60 Hz)			
Maximum pressure	1900 kPa			
Rated voltage	AC 110 V	AC 115 V	AC 220 V	AC 220 V/230 V/240 V
Rated frequency	60 Hz	60 Hz	60 Hz	50 Hz
Power consumption	175 W	180 W	170 W	155 W
Usable condition	-5 to 30°C, 80%R.H. or less			

✧ The above data is measured based on our internal basis.

✧ Design or specifications will be subject to change without notice.

✧ The unit with CE mark complies with EC directives.

⚠ CAUTION

Please fill in this form before servicing.
Hand over this form to the service engineer to keep for his and your safety.

Safety check sheet

1. Refrigerator contents : ☐Yes ☐No
   Risk of infection: ☐Yes ☐No
   Risk of toxicity: ☐Yes ☐No
   Risk from radioactive sources: ☐Yes ☐No

   (List all potentially hazardous materials that have been stored in this unit.)
   Notes :

2. Contamination of the unit
   Unit interior ☐Yes ☐No
   No contamination ☐Yes ☐No
   Decontaminated ☐Yes ☐No
   Contaminated ☐Yes ☐No
   Others:

3. Instructions for safe repair/maintenance of the unit
   a) The unit is safe to work on ☐Yes ☐No
   b) There is some danger (see below) ☐Yes ☐No
   Procedure to be adhered to in order to reduce safety risk indicated in b) below.

Date :
Signature :
Address, Division :
Telephone :

Product name : Pharmaceutical Refrigerator	Model : MPR-	Serial number :	Date of Installation :

Please decontaminate the unit yourself before calling the service engineer.

Panasonic Healthcare Co., Ltd.
1-1-1 Sakata, Oizumi-Machi, Ora-Gun, Gunma 370-0596, Japan

© Panasonic Healthcare Co., Ltd. 2012

Printed in Japan
7FB6P151605002
S0412-20812