Refrigerator

User manual

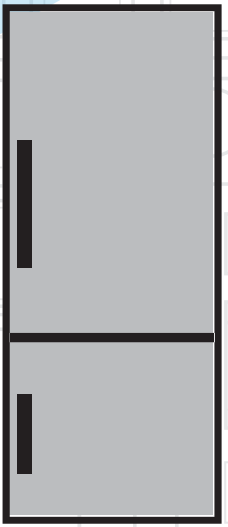

BBM335PX
BBM335W
BBM407PX

EN

Please read this user manual first!

Dear Customer,

We hope that your product, which has been produced in modern plants and checked under the most meticulous quality control procedures, will provide you an effective service.

Therefore, read this entire user manual carefully before using the product and keep it as a reference. If you handover the product to someone else, give the user manual as well.

The user manual will help you use the product in a fast and safe way.

- Read the manual before installing and operating the product.
- Make sure you read the safety instructions.
- Keep the manual in an easily accessible place as you may need it later.
- Read the other documents given with the product.

Remember that this user manual is also applicable for several other models. Differences between models will be identified in the manual.

Explanation of symbols

Throughout this user manual the following symbols are used:

Important information or useful tips.

Warning against dangerous conditions for life and property.

Warning against electric voltage.

CONTENTS

1 Your Refrigerator 3

2 Important Safety Warnings 4

Intended use 4
General safety 4
For products with a 8
water dispenser; 8
Child safety 9
Compliance with WEEE Directive and Disposing of the Waste Product: 9
Package information 9
HC warning 9
Things to be done for energy saving 10
Recommendations for the fresh food compartment..... 10

3 Installation 11

Points to be paid attention to when relocating of the refrigerator..... 11
Electrical connection 11
Disposing of the packaging 12
Disposing of your old refrigerator 12
Placing and Installation 12
Adjusting the legs 13
Door Open Warning 13
Changing the illumination lamp 13

4 Preparation 15

5 Using your refrigerator 16

Indicator panel..... 16
Freezing fresh food 21
Recommendations for preservation of frozen food 21
Placing the food 21
Making ice 22
Deep-freeze information 22
Twist Ice – matic 23
Ice container 23
Fan 24
Crisper 24
Chiller compartment 24
Description and cleaning of odour filter: 25
Reversing the door 26

6 Maintenance and cleaning 27

Protection of plastic surfaces 27

7 Troubleshooting 28

1 Your Refrigerator

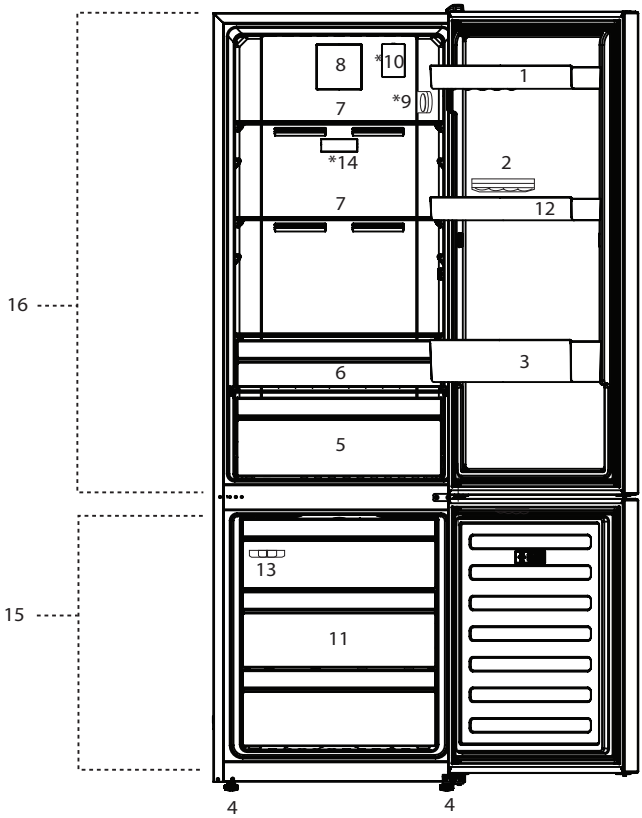

1. Door shelf
2. Egg section
3. Bottle shelf
4. Adjustable feet
5. Fridge crisper
6. Chiller compartment
7. Glass Shelf
8. Fan
9. Temperature setting button
10. Ion Guard
11. Freezer Crisper
12. Moveing door shelf
13. Ice box / Ice-making
14. Air Filter
15. Freezer compartment
16. Fridge compartment

*optional

Figures that take place in this instruction manual are schematic and may not correspond exactly with your product. If the subject parts are not included in the product you have purchased, then it is valid for other models.

2 Important Safety Warnings

- Keep ventilation openings, in the appliance enclosure or in the built-in structure, clear of obstruction
- Do not use electrical appliances inside the food appliance, unless they are of the type storage compartments of the appliance, unless they are of the type recommended by the manufacturer
- this appliance can be used by children aged from 8 years and above and persons with reduced physical, sensory or mental capabilities or lack of experience and knowledge if they have been given supervision or instruction concerning use of the appliance in a safe way and understand the hazards involved.
- children shall not play with the appliance
- Cleaning and user maintenance shall not be made by children without supervision

Please review the following information. Failure to observe this information may cause injuries or material damage. Otherwise, all warranty and reliability commitments will become invalid.

Intended use

This product is intended to be used

- indoors and in closed areas such as homes;
- in closed working environments such as stores and offices;
- in closed accommodation areas such as farm houses, hotels, pensions.
- It should not be used outdoors.

General safety

- When you want to dispose/scrap the product, we recommend you to consult the authorised service agent in order to learn the required information and authorized bodies.
- Consult your authorised service agent for all your questions and problems related to the refrigerator. Do not intervene or let someone intervene to the refrigerator without notifying the authorised service agent
- For products with a freezer compartment; Do not eat cone ice cream and ice cubes immediately after you take them out of the freezer compartment! (This may cause freezer burn)
- For products with a freezer compartment; Do not put bottled and canned liquid beverages in the freezer compartment. Otherwise, these may burst
- Do not touch frozen food by hand; they may stick to your hand.

- Unplug your refrigerator before cleaning or defrosting.
- Vapor and vaporized cleaning materials should never be used in cleaning and defrosting processes of your refrigerator. In such cases, the vapor may get in contact with the electrical parts and cause short circuit or electric shock.
- Never use the parts on your refrigerator such as the door as a means of support or step.
- Do not use electrical devices inside the refrigerator.
- Do not damage the parts, where the refrigerant is circulating, with drilling or cutting tools. The refrigerant that might blow out when the gas channels of the evaporator, pipe extensions or surface coatings are punctured causes skin irritations and eye injuries.
- Do not cover or block the ventilation holes on your refrigerator with any material.
- Electrical devices must be repaired by only authorised persons. Repairs performed by incompetent persons create a risk for the user.
- In case of any failure or during a maintenance or repair work, disconnect your refrigerator's mains supply by either turning off the relevant fuse or unplugging your appliance.
- Do not pull by the cable when pulling off the plug.
- Ensure highly alcoholic beverages are stored securely with the lid fastened and placed upright.
- Never store spray cans containing flammable and explosive substances in the refrigerator.
- Do not use mechanical devices or other means to accelerate the defrosting process, other than those

recommended by the manufacturer.
- This product is not intended to be used by persons with physical, sensory or mental disorders or unlearned or inexperienced people (including children) unless they are attended by a person who will be responsible for their safety or who will instruct them accordingly for use of the product
- Do not operate a damaged refrigerator. Consult with the service agent if you have any concerns.
- Electrical safety of your refrigerator shall be guaranteed only if the earth system in your house complies with standards.
- Exposing the product to rain, snow, sun and wind is dangerous with respect to electrical safety.
- Contact The Authorised Service Agent when there is a power cable damage to avoid danger.
- Never plug the refrigerator into the wall outlet during installation. Otherwise, risk of death or serious injury may arise.
- This refrigerator is intended for only storing food items. It must not be used for any other purpose.
- Label of technical specifications is located on the left wall inside the refrigerator.
- Never connect your refrigerator to electricity-saving systems; they may damage the refrigerator.
- If there is a blue light on the refrigerator, do not look at the blue light with optical tools.
- For manually controlled refrigerators, wait for at least 5 minutes to start the refrigerator after power failure.
- This operation manual should be handed in to the new owner of the product when it is given to others.

- Avoid causing damage on power cable when transporting the refrigerator. Bending cable may cause fire. Never place heavy objects on power cable. Do not touch the plug with wet hands when plugging the product.
- Do not plug the refrigerator if the wall outlet is loose.
- Water should not be sprayed on inner or outer parts of the product for safety purposes.
- Do not spray substances containing inflammable gases such as propane gas near the refrigerator to avoid fire and explosion risk.
- Never place containers filled with water on top of the refrigerator; in the event of spillages, this may cause electric shock or fire.
- Do not overload the refrigerator with food. If overloaded, the food items may fall down and hurt you and damage refrigerator when you open the door.
- Never place objects on top of the refrigerator; otherwise, these objects may fall down when you open or close the refrigerator's door.
- As they require a precise temperature, vaccines, heat-sensitive medicine and scientific materials and etc. should not be kept in the refrigerator.
- If not to be used for a long time, refrigerator should be unplugged. A possible problem in power cable may cause fire.
- The plug's tip should be cleaned regularly with a dry cloth; otherwise, it may cause fire.
- Refrigerator may move if adjustable legs are not properly secured on the floor. Properly securing adjustable legs on the floor can prevent the refrigerator to move.
- When carrying the refrigerator, do not hold it from door handle. Otherwise, it may be snapped.

- When you have to place your product next to another refrigerator or freezer, the distance between devices should be at least 8cm. Otherwise, adjacent side walls may be humidified.
- The product shall never be used while the compartment which is located at the top or back of your product and in which electronic boards are available (electronic board box cover) (1) is open.

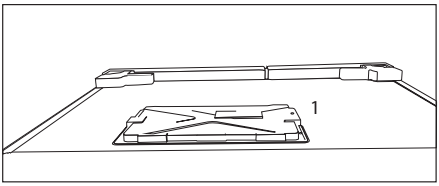

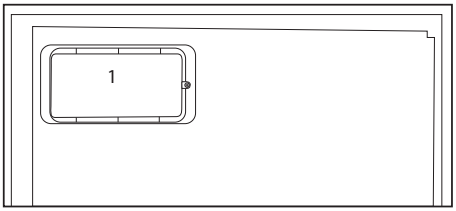

Child safety

- If the door has a lock, the key should be kept away from reach of children.
- Children must be supervised to prevent them from tampering with the product.

Compliance with WEEE Directive and Disposing of the Waste Product:

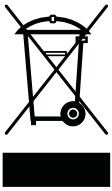

This product complies with EU WEEE Directive (2012/19/EU). This product bears a classification symbol for waste electrical and electronic equipment (WEEE).

This product has been manufactured with high quality parts and materials which can be reused and are suitable for recycling. Therefore, do not dispose the product with normal domestic waste at the end of its service life. Take it to a collection point for the recycling of electrical and electronic equipment. Please consult your local authorities to learn the nearest collection point. Help protect the environment and natural resources by recycling used products. For children's safety, cut the power cable and break the locking mechanism of the door, if any, so that it will be non-functional before disposing of the product.

Package information

Packaging materials of the product are manufactured from recyclable materials in accordance with our National Environment Regulations. Do not dispose of the packaging materials together with the domestic or other wastes. Take them to the packaging material collection points designated by the local authorities.

Do not forget...

Any recycled substance is an indispensable matter for nature and our national asset wealth.

If you want to contribute to the re-evaluation of the packaging materials, you can consult to your environmentalist organizations or the municipalities where you are located.

HC warning

If your product's cooling system contains R600a:

This gas is flammable. Therefore, pay attention to not damaging the cooling system and piping during usage and transportation. In the event of damage, keep your product away from potential fire sources that can cause the product catch a fire and ventilate the room in which the unit is placed.

Ignore this warning if your product's cooling system contains R134a.

Type of gas used in the product is stated in the type label which is on the left wall inside the refrigerator.

Never throw the product in fire for disposal.

Recommendations for the fresh food compartment

*May not be available in all models

Do not allow the food to touch the temperature sensor in fresh food compartment. To allow the fresh food compartment keep its ideal storage temperature, sensor must not be hindered by food.

Do not place hot foods in the product.

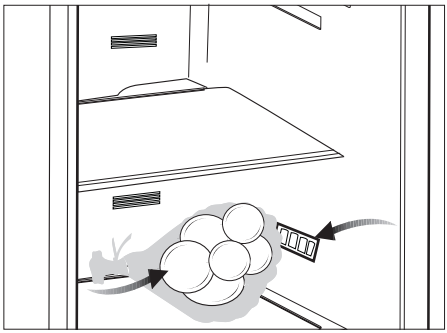

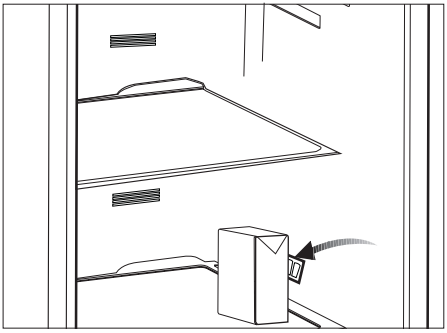

Things to be done for energy saving

- Do not leave the doors of your refrigerator open for a long time.
- Do not put hot food or drinks in your refrigerator.
- Do not overload your refrigerator so that the air circulation inside of it is not prevented.
- Do not install your refrigerator under direct sunlight or near heat emitting appliances such as ovens, dishwashers or radiators. Keep your refrigerator at least 30cm away from
- heat emitting sources and at least 5cm from electrical ovens.
- Pay attention to keep your food in closed containers.
  For products with a freezer compartment; You can store maximum amount of food items in the freezer when you remove the shelf or drawer of the freezer. Energy consumption value stated for your refrigerator has been determined by removing freezer shelf or drawer and under maximum load. There
- is no harm to use a shelf or drawer according to the shapes and size of food to be frozen.
  Thawing frozen food in fridge compartment will both provide energy saving and preserve the food quality.

3 Installation

In case the information which are given in the user manual are not taken into account, manufacturer will not assume any liability for this.

Points to be paid attention to when the relocation of the refrigerator

1. Your refrigerator should be unplugged.Before transportation of your refrigerator, it should be emptied and cleaned.

2. Before it is re-packaged, shelves, accessories, crisper, etc. inside your refrigerator should be fixed with adhesive tape and secured against impacts. Package should be bound with a thick tape and the transportation rules on the package should be strictly observed.

3. Original packaging and foam materials should be kept for future transportations or moving.

Before you start the refrigerator,

Check the following before you start to use your refrigerator:

1. Clean the interior of the refrigerator as recommended in the “Maintenance and cleaning” section.

2. Connect the plug of the refrigerator to the wall socket. When the fridge door is opened, fridge internal lamp will turn on.

3. When the compressor starts to operate, a sound will be heard. The liquid and gases sealed within the refrigeration system may also give rise to noise, even if the compressor is not running and this is quite normal.

4. Front edges and both sides of the refrigerator may feel warm. This is normal. These areas are designed to be warm to avoid condensation.

Electrical connection

Connect your product to a grounded socket which is being protected by a fuse with the appropriate capacity.

Important:

The connection must be in compliance with national regulations.

- The power plug must be easily accessible after installation.
- Electrical safety of your refrigerator shall be guaranteed only if the earth system in your house complies with standards.
- The voltage stated on the label located at left inner side of your product should be equal to your network voltage.
- Extension cables and multi plugs must not be used for connection.


A damaged power cable must be replaced by a qualified electrician.


Product must not be operated before it is repaired! There is the risk of electric shock!

Disposing of the packaging

The packing materials may be dangerous for children. Keep the packing materials out of the reach of children or dispose of them by classifying them in accordance with the waste instructions stated by your local authorities. Do not throw away with regular house waste, throw away on packaging pick up spots designated by the local authorities .

The packing of your refrigerator is produced from recyclable materials.

Disposing of your old refrigerator

Dispose of your old refrigerator without giving any harm to the environment.

- You may consult your Authorised Service Agent waste collection center of your municipality about the disposal of your refrigerator.

Before disposing of your refrigerator, cut out the electric plug and, if there are any locks on the door, make them inoperable in order to protect children against any danger.

Placing and Installation


If the entrance door of the room where the refrigerator will be installed is not wide enough for the refrigerator to pass through, then call The Authorised Service Agent to have them remove the doors of your refrigerator and pass it sideways through the door.

1. Install your refrigerator to a place that allows ease of use.
2. Keep your refrigerator away from heat sources, humid places and direct sunlight.
3. There must be appropriate air ventilation around your refrigerator in order to achieve an efficient operation. If the refrigerator is to be placed in a recess in the wall, there must be at least 5 cm distance with the ceiling and at least 5 cm with the wall. Do not place your product on the materials such as rug or carpet.
4. Place your refrigerator on an even floor surface to prevent jolts.

Adjusting the legs

If your refrigerator is unbalanced;

You can balance your refrigerator by turning its front legs as illustrated in the figure. The corner where the leg exists is lowered when you turn in the direction of black arrow and raised when you turn in the opposite direction. Taking help from someone to slightly lift the refrigerator will facilitate this process.

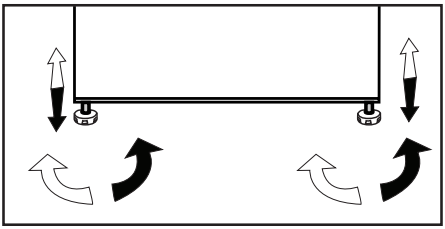

Door Open Warning

*May not be available in all models

An audio warning signal will be given when the door of your product is left open for at least 1 minute. This warning will be muted when the door is closed or any of the display buttons (if any) are pressed.

Changing the illumination lamp

To change the Bulb/LED used for illumination of your refrigerator, call your Authorised Service Agent.

The lamp(s) used in this appliance is not suitable for household room illumination. The intended purpose of this lamp is to assist the user to place foodstuffs in the refrigerator/freezer in a safe and comfortable way.The lamps used in this appliance have to withstand extreme physical conditions such as temperatures below -20 °C.

(only chest and upright freezer)

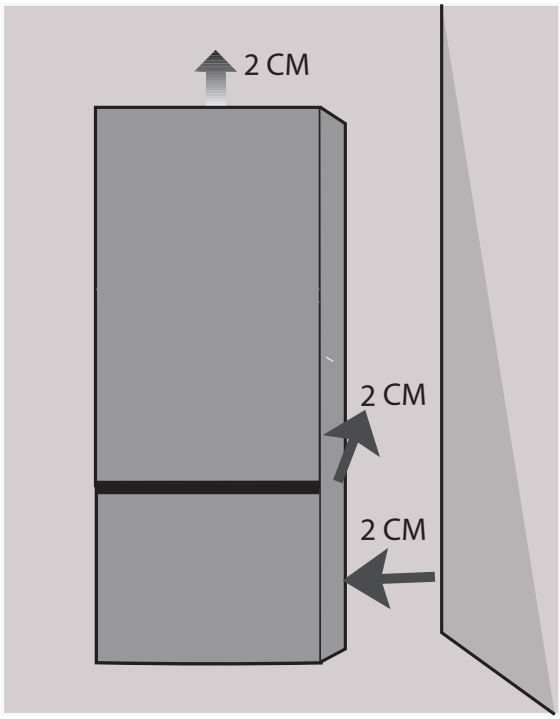
2 CM
2 CM
2 CM

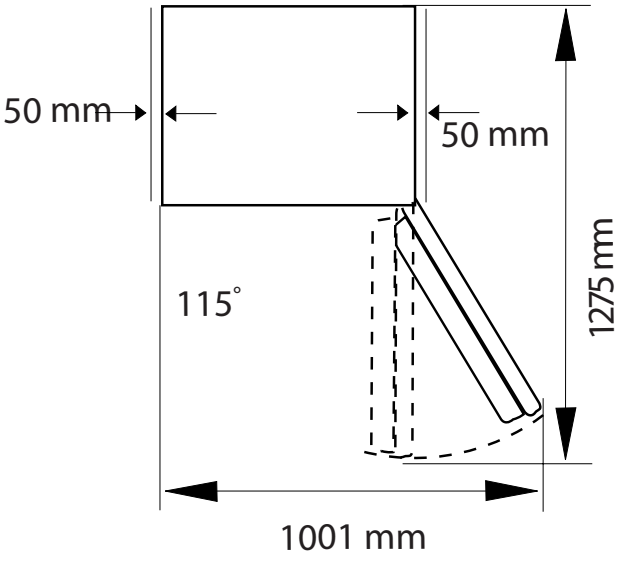
50 mm
50 mm
115°
1275 mm
1001 mm

4 Preparation

- Your refrigerator should be installed at least 30 cm away from heat sources such as hobs, ovens, central heater and stoves and at least 5 cm away from electrical ovens and should not be located under direct sunlight.
- Please make sure that the interior of your refrigerator is cleaned thoroughly.
- If two coolers are to be installed side by side, there should be at least 2 cm distance between them.
- When you operate your refrigerator for the first time, please observe the following instructions during the initial six hours.
- Its door should not be opened frequently.
- It must be operated empty without placing any food in it.
- Do not unplug your refrigerator If a power failure occurs out of your control, please see the warnings in the "Recommended solutions for the problems" section.
- The baskets/drawers that are provided with the chill compartment must always be in use for low energy consumption and for better storage conditions.
- Food contact with the temperature sensor in the freezer compartment may increase energy consumption of the appliance. Thus any contact with the sensor(s) must be avoided.
- This product has been designed to function at ambient temperatures up to 43 °C (90 SDgr F). Even if the ambient temperature falls to -15 °C, frozen food in the freezer does not thaw thanks to its Advanced Electronic Temperature Control System.

  youcan place your product in the garage or an unheated room without the concern of causing frozen food to get rotten. However, it is likely that above mentioned low temperatures may cause the freezing of the food in the fridge compartment; thus, please consume the food items in the fridge in a controlled way as needed. When ambient temperature goes back to normal, you may change button setting according to your need.
- If the ambient temperature is below 0°C, the food in fridge compartment will freeze. Therefore, we recommend not using the fridge compartment in such low ambient temperatures. You may continue to use the freezer compartment as usual.
- In some models, the instrument panel automatically turns off 5 minutes after the door has closed. It will be reactivated when the door has opened or pressed on any key.
- Due to temperature change as a result of opening/closing the product door during operation, condensation on the door/body shelves and the glass containers is normal.

5 Using your refrigerator

Indicator panel (External Display) *Optional

Indicator panel allows you to set the temperature and control the other functions related to the product without opening the door of the product. Just press the inscriptions on relevant buttons for function settings.

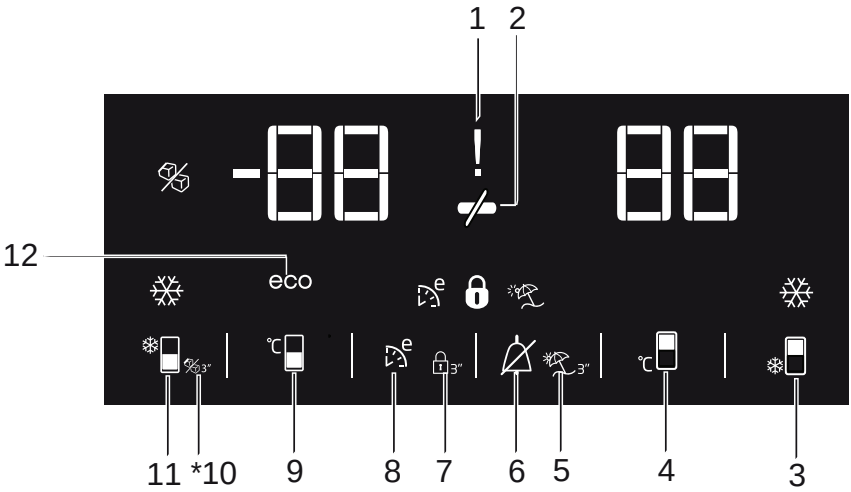

1. Power failure/High temperature / error warning indicator
This indicator ( ) illuminates during power failure, high temperature failures and error warnings. During sustained power failures, the highest temperature that the freezer compartment reaches will flash on the digital display. After checking the food located in the freezer compartment ( ) press the alarm off button to clear the warning.
Please refer to "remedies advised for troubleshooting" section on your manual if you observe that this indicator is illuminated.

2. Energy saving function (display off):
If the product doors are kept closed for a long time energy saving function is automatically activated and energy saving symbol is illuminated. ( )
When energy saving function is activated, all symbols on the display other than energy saving symbol will turn off. When the Energy Saving function is activated, if any button is pressed or the door is opened, energy saving function will be cancelled and the symbols on display will return to normal.

Figures that take place in this instruction manual are schematic and may not correspond exactly with your product. If the subject parts are not included in the product you have purchased, then it is valid for other models.

Energy saving function is activated during delivery from factory and cannot be canceled.

3.Quick fridge function

The button has two functions. To activate or deactivate the quick cool function press it briefly. Quick Cool indicator will turn off and the product will return to its normal settings. ( )

	Use quick cooling function when you want to quickly cool the food placed in the fridge compartment. If you want to cool large amounts of fresh food, activate this function before putting the food into the product
	If you do not cancel it, quick cooling will cancel itself automatically after 1 hours or when the fridge compartment reaches to the required temperature

	If you press the quick cooling button repeatedly with short intervals, the electronic circuit protection will be activated and the compressor will not .start up immediately

	This function is not recalled when power restores after a power failure

4. Fridge compartment temperature setting button

Press this button to set the temperature of the fridge compartment to 8, 7,6, 5,4,3, 2, 8... respectively. Press this button to set the fridge compartment temperature to the desired value. ( )

5.Vacation Function

In order to activate vacation function, press the this button ( ) for 3 seconds, and the vacation mode indicator ( ) will be activated. When the vacation function is activated, "- -" is displayed on the fridge compartment temperature indicator and no active cooling is performed on the fridge compartment. It is not suitable to keep the food in the fridge compartment when this function is activated. Other compartments shall be continued to be cooled as per their set temperature.

To cancel this function press **Vacation** function button again.

6. Alarm off warning:

In case of power failure/high temperature alarm, after checking the food located in the freezer compartment press the alarm off button ( ) to clear the warning.

7. Key lock

Press key lock button (3") simultaneously for 3 seconds. Key lock symbol

( ) will light up and key lock mode will be activated. Buttons will not function if the Key lock mode is active. Press key lock button simultaneously for 3 seconds again. Key lock symbol will turn off and the key lock mode will be exited.

Press the **key lock** button if you want to prevent changing of the temperature setting of the refrigerator (3").

8. Eco fuzzy

Press and hold eco fuzzy button for 1 seconds to activate eco fuzzy function. Refrigerator will start operating in the most economic mode at least 6 hours later and the economic usage

indicator will turn on when the function is active ( ). Press and hold eco fuzzy function button for 3 seconds to deactivate eco fuzzy function.
This indicator is illuminated after 6 hours when eco fuzzy is activated.

9. Freezer compartment temperature setting button
Press this button to set the temperature of the freezer compartment to-16,-17,-18,-19,-20,-22,-24,-16... respectively. Press this button to set the freezer compartment temperature to the desired value. ( )

10. Icematic function (optional)
Indicates whether the icematic is on or off. ( )If On, then the icematic is not operating. To operate the icematic again press and hold the On-Off button for 3 seconds.

	Water flow from water tank will stop when this function is selected. However, ice made previously can be taken from the icematic

11. Quick freeze function button
Press this button to activate or deactivate the quick freezing function. When you activate the function, the freezer compartment will be cooled to a temperature lower than the set value. ( )

	Use the quick freeze function when you want to quickly freeze the food placed in fridge compartment. If you want to freeze large amounts of fresh food, activate this function before putting the food into the product
	If you do not cancel it, Quick Freeze will cancel itself automatically after 24 hours or when the fridge compartment reaches to the required temperature
	This function is not recalled when power restores after a power failure

12. Economic usage indicator
Indicates that the product is running in energy-efficient mode. ( )This indicator will be active if the Freezer Compartment temperature is set to -16 or the energy efficient cooling is being performed due to Eco-Extra function.

	Economic usage indicator is turned off when quick cooling or quick freeze functions are selected

5 Using your refrigerator

Indicator panel (Internal Display) *Optional

Indicator panels may vary according to the product model.
Audio – visual functions on the indicator panel helps you in using your product.

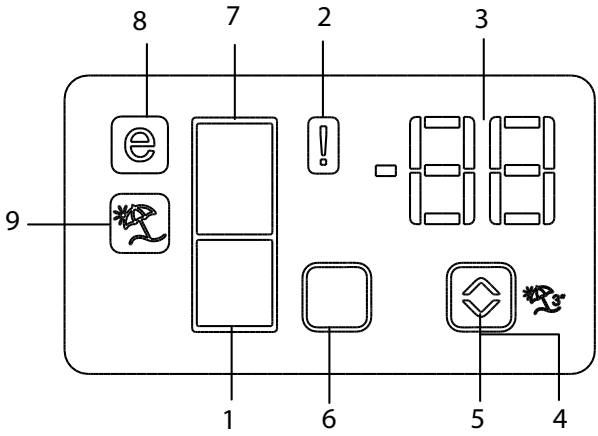

1. Freezer compartment indicator
2. Error status indicator
3. Temperature indicator
4. Vacation function button
5. Temperature setting button
6. Compartment selection button
7. Fridge Compartment Indicator
8. Economy mode indicator
9. Vacation function indicator

*optional

Figures that take place in this instruction manual are schematic and may not correspond exactly with your product. If the subject parts are not included in the product you have purchased, then it is valid for other models.

1. Freezer compartment indicator
Fridge compartment light is illuminated while the freezer compartment temperature is set.

2. Error status indicator
If your refrigerator does not perform enough cooling or in case of a sensor fault, this indicator is activated. When this indicator is activated, "E" is displayed on the freezer compartment temperature indicator, and numbers such as "1,2,3..." are displayed on the fridge compartment temperature indicator. These numbers on the indicator inform service personnel about the error.

3. Temperature indicator
Indicates freezer, fridge compartment temperature.

4. Vacation function button
Press on Vacation Button for 3 seconds to activate this function. When the vacation function is activated, "- -" is displayed on the fridge compartment temperature indicator and no active cooling is performed on the fridge compartment. It is not suitable to keep the food in the fridge compartment when this function is activated. Other compartments shall be continued to be cooled as per their set temperature.

To cancel this function press Vacation button again.

5. Temperature setting button
Changes the temperature of the relevant compartment between -24°C... -18°C and 8°C...1°C.

6. Compartment selection button
Selection button: Press compartment selection button to switch between fridge and freezer compartments.

7. Fridge compartment indicator
Fridge compartment light is illuminated while the fridge compartment temperature is set.

8. Economy mode indicator
Indicates that the refrigerator operates in energy saving mode. This display shall be activated if the freezer compartment temperature is set to -16°C.

9. Vacation function indicator
Indicates that vacation is activated.

Freezing fresh food

- It is preferred to wrap or cover the food before placing them in the refrigerator.
- Hot food must cool down to the room temperature before putting them in the refrigerator.
- The foodstuff that you want to freeze must be fresh and in good quality.
- The foodstuff must be packaged in an airtight manner to prevent them from drying even if they are going to be kept for a short time.
- Materials to be used for packaging must be tear-proof and resistant to cold, humidity, odour, oils and acids and they must also be airtight. Moreover, they must be well closed and they must be made from easy-to-use materials that are suitable for deep freeze usage.
- Frozen food must be used immediately after they are thawed and they should never be re-frozen.
- Please observe the following instructions to obtain the best results.

1. Do not freeze too large quantities of food at one time. The quality of the food is best preserved when it is frozen right through to the core as quickly as possible.

2. Placing warm food into the freezer compartment causes the cooling system to operate continuously until the food is frozen solid.

3. Take special care not to mix already frozen food and fresh food.

Recommendations for preservation of frozen food

- Prepacked commercially frozen food should be stored in accordance with the frozen food manufacturer's instructions for a **** (4 star) frozen food storage compartment.
- To ensure that the high quality achieved by the frozen food manufacturer and the food retailer is maintained, the following should be remembered:

1. Put packages in the freezer as quickly as possible after purchase.

2. Ensure that contents are labeled and dated.

3. Do not exceed "Use By", "Best Before" dates on the packaging.

Defrosting

The freezer compartment defrosts automatically.

Placing the food

Freezer compartment shelves	Various frozen food such as meat, fish, ice cream, vegetables and etc.
Egg tray	Egg
Fridge compartment shelves	Food in pans, covered plates and closed containers
Fridge compartment door shelves	Small and packaged food or drinks (such as milk, fruit juice and beer)
Crisper	Vegetables and fruits

Freshzone compartment	Delicatessen products (cheese, butter, salami and etc.)

Deep-freeze information

Food must be frozen as rapidly as possible when they are put in a refrigerator in order to keep them in good quality.

It is possible to keep the food for a long time only at -18°C or lower temperatures.

You can keep the freshness of food for many months (at -18°C or lower temperatures in the deep freeze).

WARNING! ⚠

- Foodstuff must be divided into portions according to the family's daily or meal based consumption needs.
- Foodstuff must be packaged in an airtight manner to prevent them from drying even if they are going to be kept for a short time.

Materials to be used for packaging the foodstuff must be tear-proff and resistant to cold, humidity ,odour, oils and acids.

Foodstuff to be frozen should not be allowed to come in contact with the previously frozen items to prevent their partial thawing.

Frozen food must be used immediately after they are thawed and they should never be re-frozen.

Making ice

(This feature is optional)

Fill the ice container with water and place it into the freezer compartment. Your ice will be ready approximately in two hours.

You can remove the ice in the ice container by removing it from the freezer and twisting it.

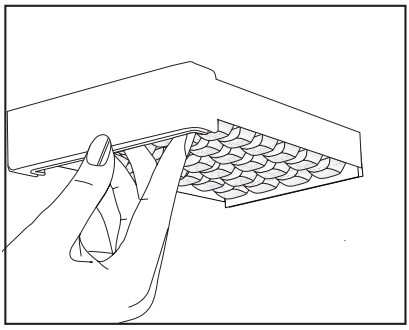

Twist Ice – matic

(This feature is optional)

- Remove the water tank by rotating it to the left.
- Open the water tank cover by turning it and add water to the water tank up to the lower part of the water tank cover.
- Place the water tank on its place as shown in the figure after adding water and have it seated by rotating it on the direction of the arrow. Water shall be poured down to the icebank.
- When ice has formed, rotate icebank knob in the direction of the arrow to allow that the ice is dropped down to the ice drawer.
- Take the ice cubes by pulling ice drawer out.
- Pull the front face towards you in order to wash the icebank, and put it on the slides on the interior area and push it to its place in order to replace it.
- Pull the twist icematic unit towards you in order to remove the unit, and put it on the slides on the ceiling and push it to its place in order to replace it.

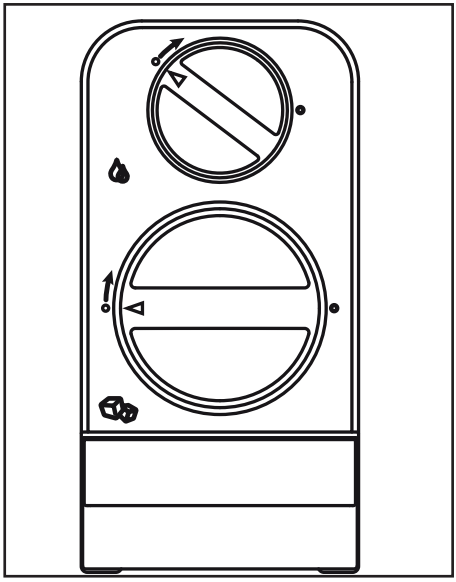

Ice container

- Remove the ice container from the freezer compartment.
- Fill the ice container with water.
- Place the ice container in the freezer compartment. About two hours later, the ice is ready.
- Remove the ice container from the freezer compartment and bend it over the service plate. Ice cubes will easily fall down to the service plate.

Fan

Fan is designed to ensure homoge - neous distribution and circulation of the cold air inside your refrigerator. Operation time of the fan may vary depending on the properties of your product.

While the fan works only with the com - pressor in some products, the control system determines its operation time in some products in accordance with the cooling requirement.

Chiller compartment

(This feature is optional)

Use this compartment to store delicatessen that shall be stored in a lower temperature or meat products that you will consume in a short time. Chiller compartment is the coolest place in your refrigerator where you can keep dairy products, meat, fish and poultry under ideal storage conditions. Fruits and vegetables should not be stored in this compartment.

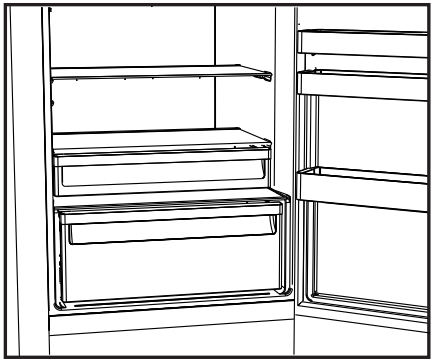

Crisper

Crisper of the product is designed specially to keep the vegetables fresh without losing their humidity. For this purpose, cool air circulation is intensified around the crisper in general.

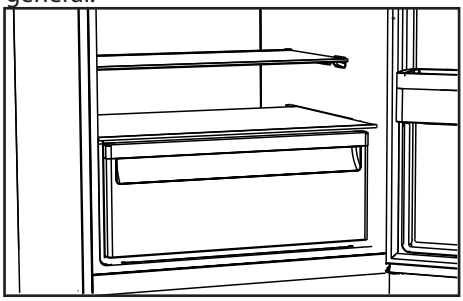

Description and cleaning of odour filter:

optional *

Odour filter prevents unpleasant odour build-up in your refrigerator. Pull the cover into which the odour filter is installed downwards from the front section and remove as illustrated. Leave the filter under sunlight for one day. Filter will be cleaned during this time. Install the filter back to its place. Odour filter must be cleaned once in a year.

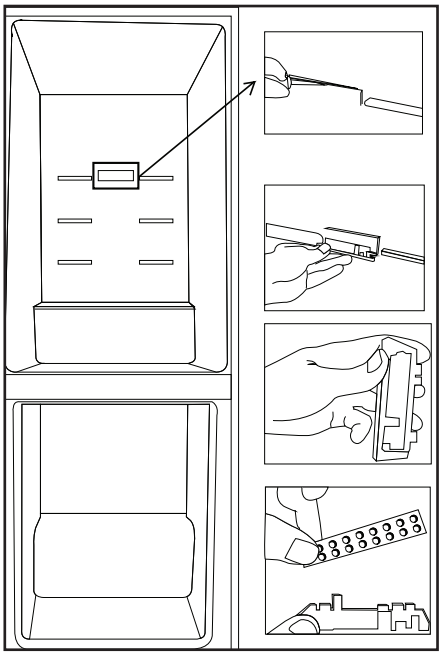

Reversing the doors

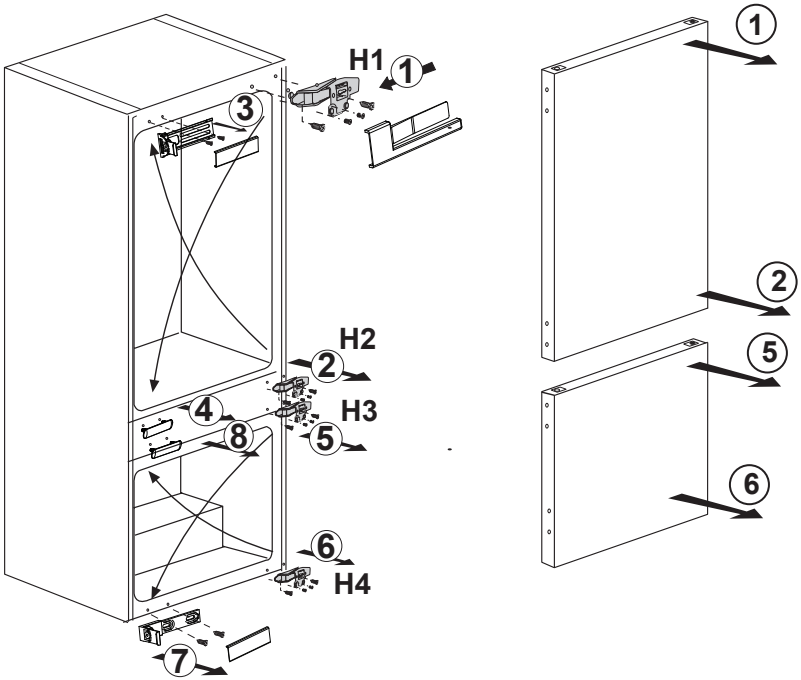

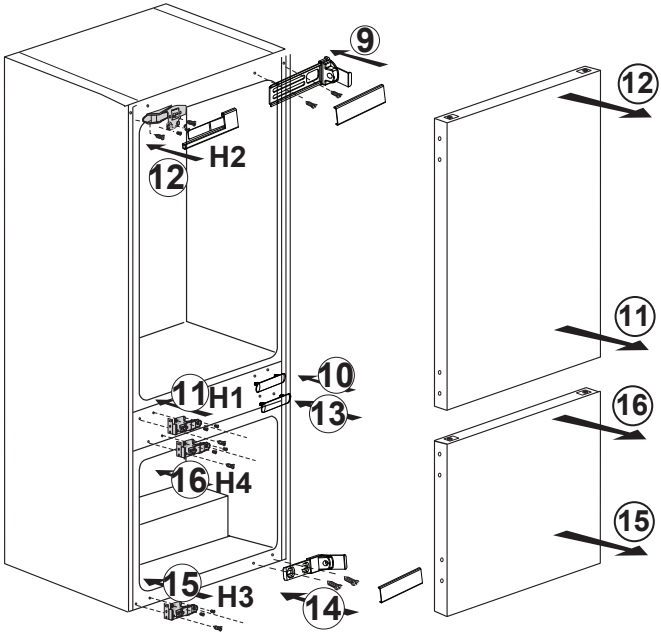

6 Maintenance and cleaning

Never use gasoline, benzene or similar substances for cleaning purposes.

We recommend that you unplug the appliance before cleaning.

Never use any sharp abrasive instrument, soap, household cleaner, detergent and wax polish for cleaning.

Use lukewarm water to clean the cabinet of your refrigerator and wipe it dry.

Use a damp cloth wrung out in a solution of one teaspoon of bicarbonate of soda to one pint of water to clean the interior and wipe it dry.

Make sure that no water enters the lamp housing and other electrical items.

If your refrigerator is not going to be used for a long period of time, unplug the power cable, remove all food, clean it and leave the door ajar.

Check door seals regularly to ensure they are clean and free from food particles.

To remove door racks, remove all the contents and then simply push the door rack upwards from the base.

Never use cleaning agents or water that contain chlorine to clean the outer surfaces and chromium coated parts of the product. Chlorine causes corrosion on such metal surfaces.

Do not use sharp, abrasive tools, soap, household cleaning agents, detergents, kerosene, fuel oil, varnish etc. to prevent removal and deformation of the prints on the plastic part. Use lukewarm water and a soft cloth for cleaning and then wipe it dry.

Protection of plastic surfaces

Do not put the liquid oils or oil-cooked meals in your refrigerator in unsealed containers as they damage the plastic surfaces of your refrigerator. In case of spilling or smearing oil on the plastic surfaces, clean and rinse the relevant part of the surface at once with warm water.

7 Troubleshooting

Please review this list before calling The Authorised Service Agent. It will save your time and money. This list includes frequent complaints that are not arising from defective workmanship or material usage. Some of the features described here may not exist in your product.

The refrigerator does not operate.
• The plug is not inserted into the socket correctly. >>>Insert the plug into the socket securely. • The fuse of the socket which your refrigerator is connected to or the main fuse have blown out. >>>Check the fuse.
Condensation on the side wall of the fridge compartment (MULTIZONE, COOL CONTROL and FLEXI ZONE).
• Door has been opened frequently. >>>Do not open and close the door of refrigerator frequently. • Ambient is very humid. >>>Do not install your refrigerator into highly humid places. • Food containing liquid is stored in open containers. >>>Do not store food with liquid content in open containers. • Door of the refrigerator is left ajar. >>>Close the door of the refrigerator. • Thermostat is set to a very cold level. >>>Set the thermostat to a suitable level.
• Compressor is not running
• Protective thermic of the compressor will blow out during sudden power failures or plug-out plug-ins as the refrigerant pressure in the cooling system of the refrigerator has not been balanced yet. The refrigerator will start running approximately after 6 minutes. Please call The Authorised Service Agent if the refrigerator does not startup at the end of this period. • The fridge is in defrost cycle. >>>This is normal for a full-automatically defrosting refrigerator. Defrosting cycle occurs periodically. • The refrigerator is not plugged into the socket. >>>Make sure that the plug is fit into the socket. • Temperature settings are not made correctly. >>>Select the suitable temperature value. • There is a power outage. >>>Refrigerator returns to normal operation when the power restores.
The operation noise increases when the refrigerator is running.
• The operating performance of the refrigerator may change due to the changes in the ambient temperature. It is normal and not a fault.
The refrigerator is running frequently or for a long time.

• New product may be wider than the previous one. Larger refrigerators operate for a longer period of time. • The room temperature may be high. >>>It is normal that the product operates for longer periods in hot ambient. • The refrigerator might be plugged in recently or might be loaded with food. >>>When the refrigerator is plugged in or loaded with food recently, it will take longer for it to attain the set temperature. This is normal. • Large amounts of hot food might be put in the refrigerator recently. >>>Do not put hot food into the refrigerator. • Doors might be opened frequently or left ajar for a long time. >>>The warm air that has entered into the refrigerator causes the refrigerator to run for longer periods. Do not open the doors frequently. • Freezer or fridge compartment door might be left ajar. >>>Check if the doors are closed completely. • The refrigerator is adjusted to a very low temperature. >>>Adjust the refrigerator temperature to a warmer degree and wait until the temperature is achieved. • Door seal of the fridge or freezer may be soiled, worn out, broken or not properly seated. >>>Clean or replace the seal. Damaged/broken seal causes the refrigerator to run for a longer period of time in order to maintain the current temperature.
Freezer temperature is very low while the fridge temperature is sufficient.
• The freezer temperature is adjusted to a very low value. >>>Adjust the freezer temperature to a warmer degree and check.
Fridge temperature is very low while the freezer temperature is sufficient.
• The fridge temperature is adjusted to a very low value. >>>Adjust the fridge temperature to a warmer degree and check.
Food kept in the fridge compartment drawers is frozen.
• The fridge temperature is adjusted to a very high value. >>>Adjust the fridge temperature to a lower value and check.
Temperature in the fridge or freezer is very high.

- The fridge temperature is adjusted to a very high value. >>>Fridge compartment temperature setting has an effect on the temperature of the freezer. Change the temperatures of the fridge or freezer and wait until the relevant compartments attain a sufficient temperature.
- Doors are opened frequently or left ajar for a long time. >>>Do not open the doors frequently.
- Door is ajar. >>>Close the door completely.
- The refrigerator is plugged in or loaded with food recently. >>>This is normal. When the refrigerator is plugged in or loaded with food recently, it will take longer for it to attain the set temperature.
- Large amounts of hot food might be put in the refrigerator recently. >>>Do not put hot food into the refrigerator.

- Vibrations or noise.

- The floor is not level or stable. >>> If the refrigerator rocks when moved slowly, balance it by adjusting its feet. Also make sure that the floor is strong enough to carry the refrigerator, and level.
- The items put onto the refrigerator may cause noise. >>>Remove the items on top of the refrigerator.

There are noises coming from the refrigerator like liquid flowing, spraying, etc.

- Liquid and gas flows occur in accordance with the operating principles of your refrigerator. It is normal and not a fault.

Whistle comes from the refrigerator.

- Fans are used in order to cool the refrigerator. It is normal and not a fault.

Condensation on the inner walls of refrigerator.

- Hot and humid weather increases icing and condensation. It is normal and not a fault.
- Doors are opened frequently or left ajar for a long time. >>>Do not open the doors frequently. Close them if they are open.
- Door is ajar. >>>Close the door completely.

Humidity occurs on the outside of the refrigerator or between the doors.

- There might be humidity in the air; this is quite normal in humid weather. When the humidity is less, condensation will disappear.

Bad odour inside the refrigerator.

- No regular cleaning is performed. >>>Clean the inside of the refrigerator regularly with a sponge, lukewarm water or carbonate dissolved in water.
- Some containers or package materials may cause the smell. >>>Use a different container or different brand packaging material.
- Food is put into the refrigerator in uncovered containers. >>>Keep the food in closed containers. Microorganisms spreading out from uncovered containers can cause unpleasant odours.
- Remove the foods that have expired best before dates and spoiled from the refrigerator.

The door is not closing.
• Food packages are preventing the door from closing. >>>Replace the packages that are obstructing the door. • The refrigerator is not completely even on the floor. >>>Adjust the feet to balance the refrigerator. • The floor is not level or strong. >>>Make sure that the floor is level and capable to carry the refrigerator.
Crispers are stuck.
• The food is touching the ceiling of the drawer. >>>Rearrange food in the drawer.



5788391200/AC
EN

CE

www.beko.com.au