N’Finity Pro S
Wine Cellar



(Features and Size May Vary)

User Manual

Model #s
237 0X 46 0Y (Dual Zone)
237 0X 47 0Y (Single Zone)
X= 2 (Stainless Steel) or 3 (Black)
Y= 3 (Right Hinge) or 4 (Left Hinge)

PLEASE READ THIS MANUAL CAREFULLY BEFORE INSTALLING AND OPERATING

IMPORTANT SAFEGUARDS

When using this appliance, always exercise basic safety precautions, including the following:

1. Read all of the instructions before using this appliance.

2. This appliance is not intended for use by persons (including children) with reduced physical, sensory or mental capabilities, or lack of experience and knowledge, unless they have been given supervision or instruction concerning use of the appliance by a person responsible for their safety.

3. Children should be supervised to ensure that they do not play with the appliance.

4. Use this appliance only for its intended purpose as described in this use and care guide.

5. This wine cellar must be properly installed in accordance with the installation instructions before it is used. See grounding instructions in the installation section.

6. Never unplug your wine cellar by pulling on the power cord. Always grasp the plug firmly and pull straight out from the outlet.

7. Unplug your wine cellar before cleaning or before making any repairs. **Note:** If for any reason this product requires service, we strongly recommend that a certified technician performs the service.

8. The SUPPLY CORD cannot be replaced. If the cord is damaged the appliance should be scrapped.

9. This appliance is designed for free standing installation or can be recessed into cabinetry.

10. If your old wine cellar is not being used, we recommend that you remove the door and leave the shelves in place. This will reduce possibility of danger to children.

11. Do not operate your wine cellar in the presence of explosive fumes.

12. Do not store foods in wine cellar as interior temperature may not be cool enough to prevent spoilage or may cause bacteria growth.

SAVE THESE INSTRUCTIONS

DANGER

Risk of child entrapment.

Before you throw away your old wine cellar, take off the doors.

Leave the shelves in place so that children may not easily climb inside.

Thank you for using our Wine Enthusiast product. This easy-to-use manual will guide you in getting the best use of your wine cellar.

Please remember to record the model and serial number, they are on a label in back of the wine cellar.

_____

Model number

_____

Serial number

_____

Date of purchase

Staple your receipt to your manual.

You will need the receipt to obtain warranty service.



Table of Contents

IMPORTANT SAFEGUARDS 2

Wine Cellar Features and Use 6

Initial Setup 6

Temperature Adjustment 6

Shelving 6

Parts and Features 7

Installation as a Built-In Cellar 8

Reversing the Door Swing 8

Installing the Handle 11

Operating Your Wine Cellar 11

Before You Start 12

Setting the Temperature Control 12

Removing the Rolling Shelf 13

Temperature Settings for Serving Wine 14

Interior Light 14

Door Lock 14

Normal Operating Sounds You May Hear 14

Technical Data 15

Proper Wine Cellar Care and Cleaning 16

Troubleshooting 17

Limited Warranty 19

Electrical Requirement

• Make sure there is a suitable power Outlet (115 volts, 15 amps outlet) with proper grounding to power the wine cellar.
• Avoid the use of three plug adapters or cutting off the third grounding in order to accommodate a two plug outlet. This is a dangerous practice since it provides no effective grounding for the wine cellar and may result in shock hazard.

Install Limitations

• Do not install your wine cellar in any location not properly insulated or heated e.g. garage etc. Your wine cellar was not designed to operate in temperature settings below 60° Fahrenheit.
• Select a suitable location for the wine cellar on a hard even surface away from direct sunlight or heat source e.g. radiators, baseboard heaters, cooking appliances etc. Any floor unevenness should be corrected with the leveling legs located on the front and rear bottom corners of the wine cellar.
• This appliance is designed for free standing installation or can be recessed into cabinetry.

Use of Extension Cords

• Avoid the use of an extension cord because of potential safety hazards under certain conditions. If it is necessary to use an extension cord, use only a 3-wire extension cord that has a 3-blade grounding plug and a 3-slot outlet that will accept the plug. The marked rating of the extension cord must be equal to or greater than the electrical rating of the appliance.

Wine Cellar Features and Use

Initial Setup

• Before connecting the wine cellar to the power source, let it stand upright for approximately **24 hours.** This will reduce the possibility of a malfunction in the cooling system from handling during transportation.

• Once you have plugged the unit into an electrical outlet, let the unit run for at least 30 minutes to acclimate before making any adjustments.

Temperature Adjustment

• When the wine cellar is plugged in for the first time, the LED display will show the factory preset temperature of 50°F.

• The wine cellar can be set to accommodate your wine storage requirements. To set the temperature, press the up or down arrow button to increase or decrease the temperature setting until the desired temperature is attained. It may take some time to reach the set temperature.

Shelving

(Type and number of shelves will vary per model)

Your cabinet was designed to store a maximum number of bottles securely. We recommend that you observe the tips below to optimize loading:

• Remove tape from shelves once unit is stable and ready for storage.

• Disperse the bottles evenly to avoid concentrating weight in one place. Bottles must not touch either the back of the cabinet or the step at the bottom. While your wine cellar was designed to hold large format bottles, such as Pinot Noir and Champagne, larger bottles reduce the number of bottles you can fit on a shelf.

• Make sure that the bottles are not all grouped together either at the top or bottom of the cabinet.

• Only pull out one rolling shelf at a time. Never attempt to pull out more than one.

• **Maximum weight capacity per shelf is 55 lbs.**

Parts and Features

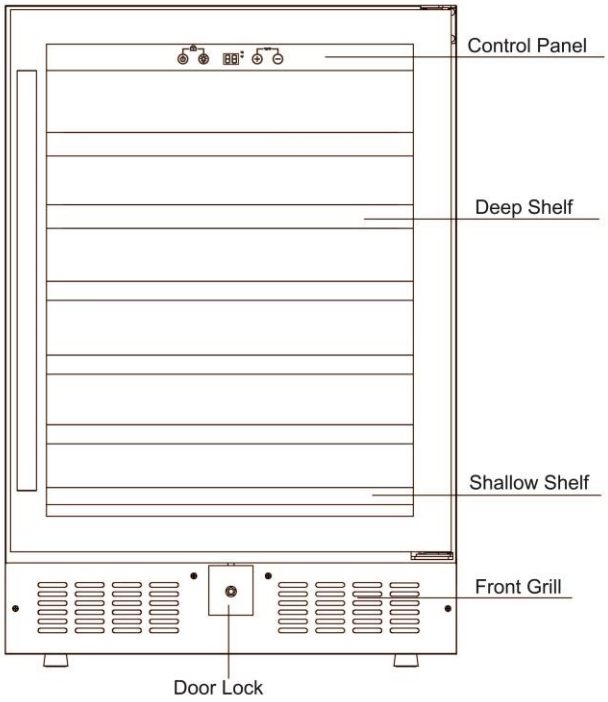

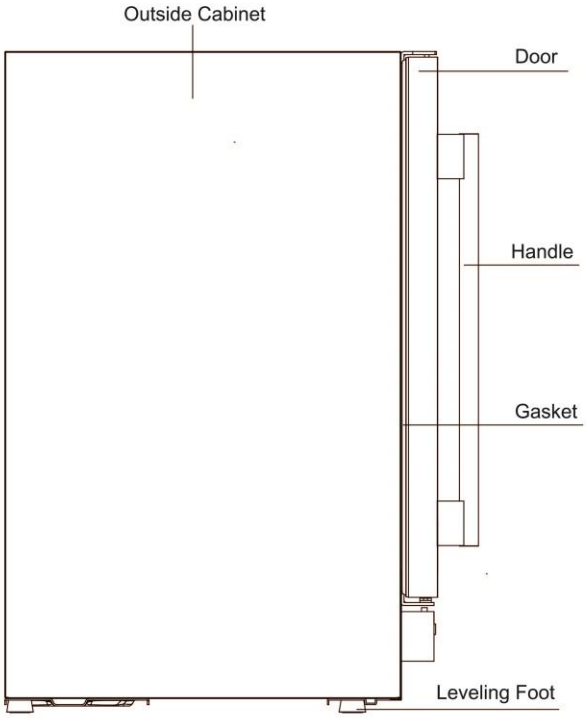

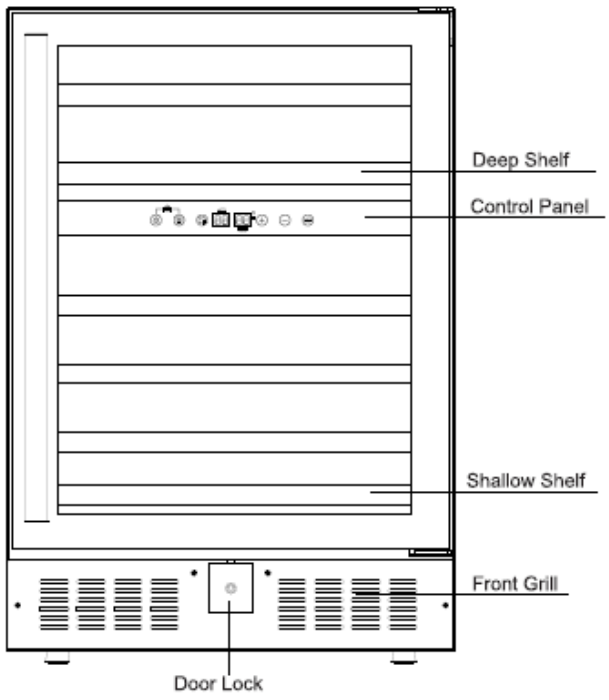

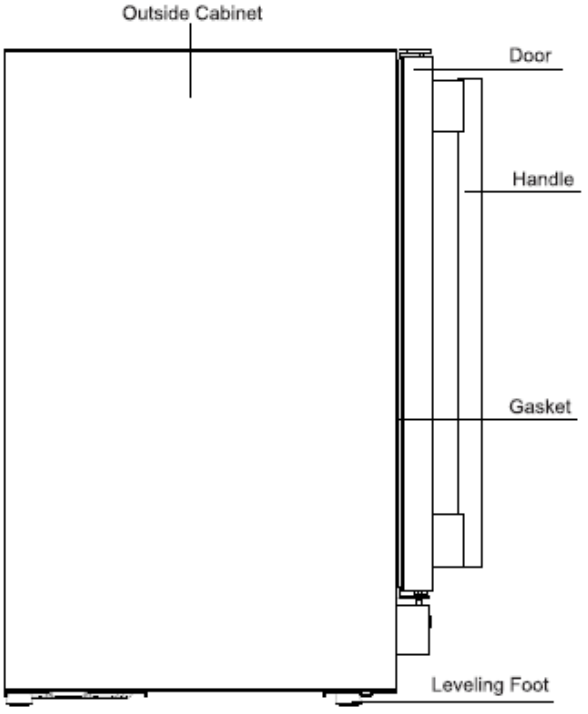

Installation as a Built-In Cellar

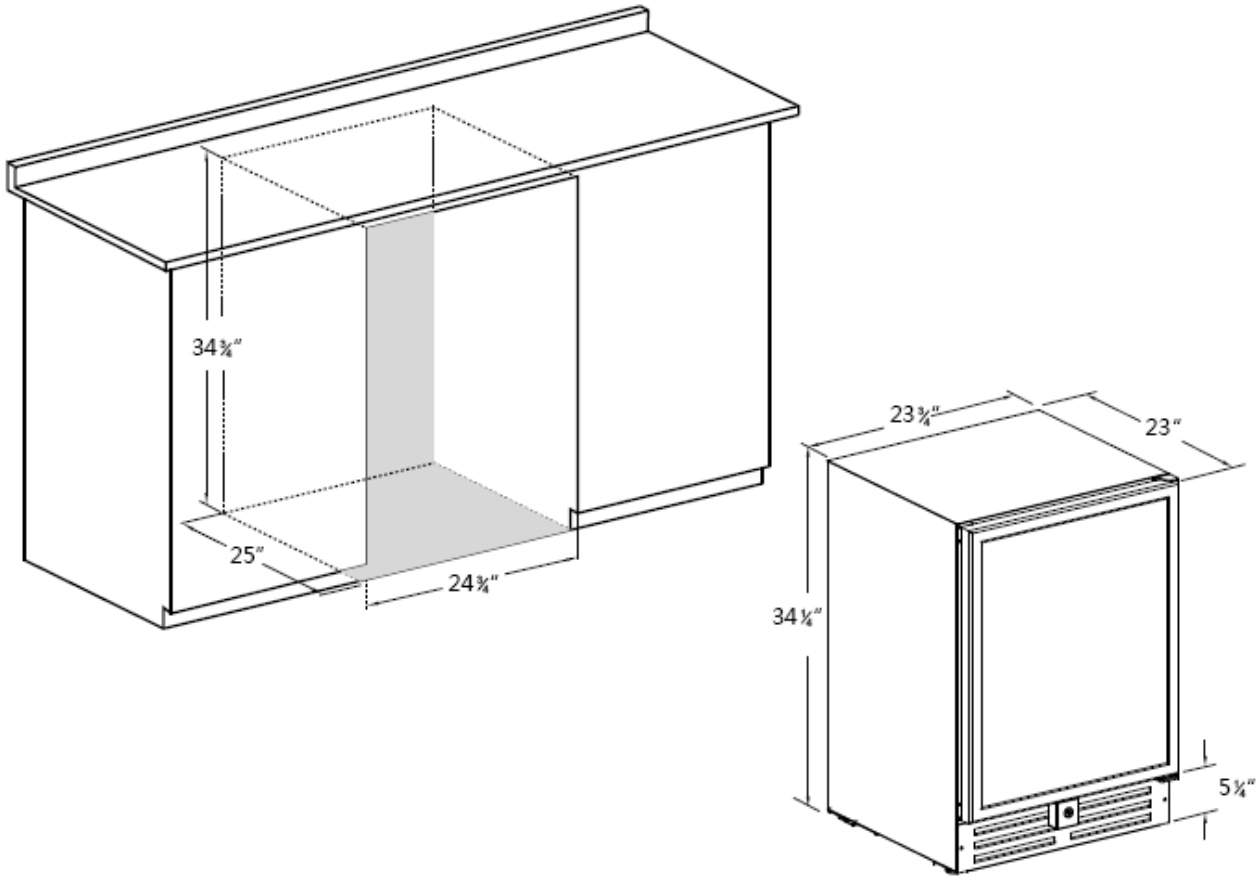

These cut out dimensions show the minimum space required for your wine cellar to perform as designed.

Reversing the Door Swing

Before you begin: Tape down shelves to avoid movement during the process

• The door of this appliance can be hung to open on the left or right side. To reverse the door swing of your cooler and open from the opposite side, please follow the instructions and diagram below.

1. Open the door, and loosen the screws from the support rod of the bottom hinge.

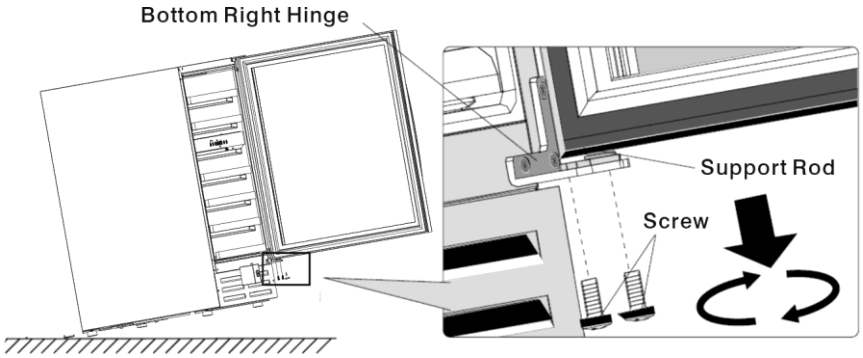

2. Remove the door off the upper hinge and take out the support rod.

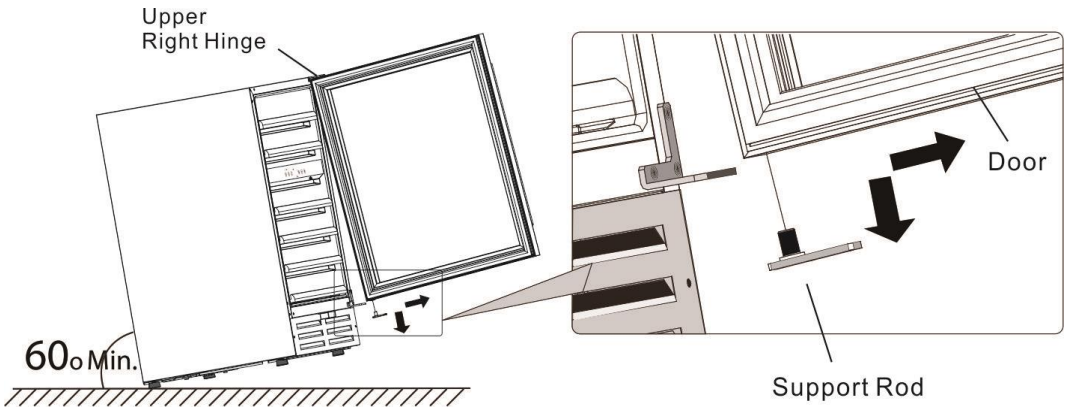

3. Use a small flat head screwdriver to pry up the plastic cap on the top center (lock hole) of the door and insert into the bottom center hole.

4. Unscrew the upper hinge and bottom hinge.

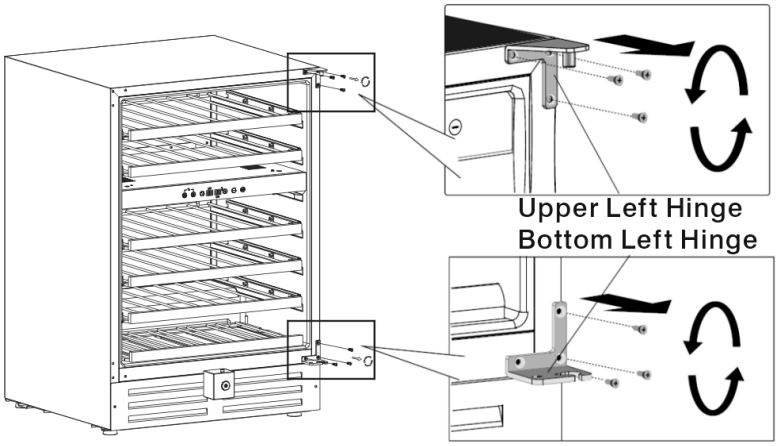

5. Pry out the plastic caps at the left side of the cabinet, and move them to the right side.

6. Install the hinge set which are packed as accessories with the instruction manual to the opposite side.

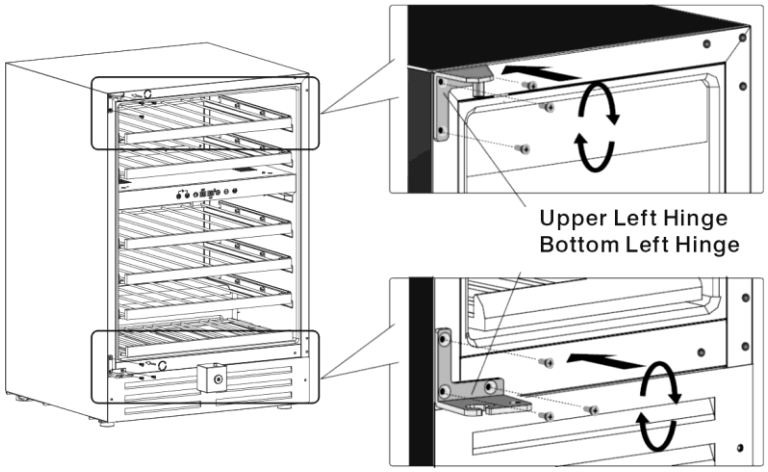

7. Rotate the door 180°so that the top is now the bottom, and install it by attaching the support rod with screws.

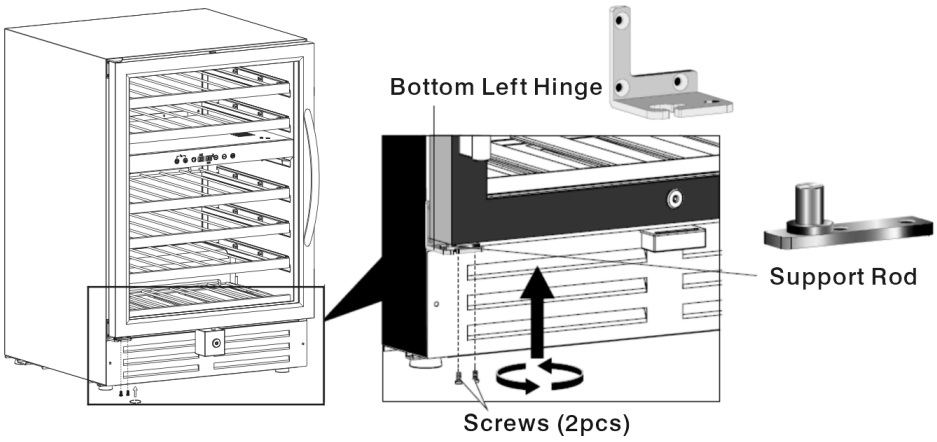

Stainless steel doors include a handle centered in the middle of the door. There is no need to alter the location of the handle. Glass doors include integrated door pull handles. There is no need to alter the location of door pull handles.

Installing the Handle

1. Pull back the door seal behind handle location.
2. Insert screws into pre-drilled screw holes.
3. Attach handle and tighten screws.
4. Press door seal back into place.

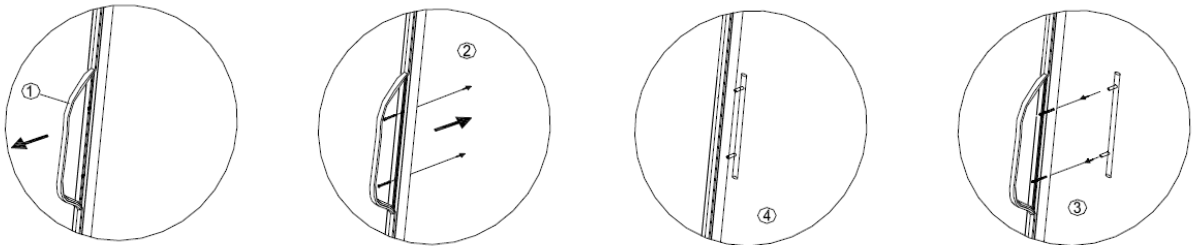

Operating Your Wine Cellar

Each wine cellar includes an operating panel on the front of the unit. This operating panel includes several features to operate and control the temperature.

1. Dual Zone

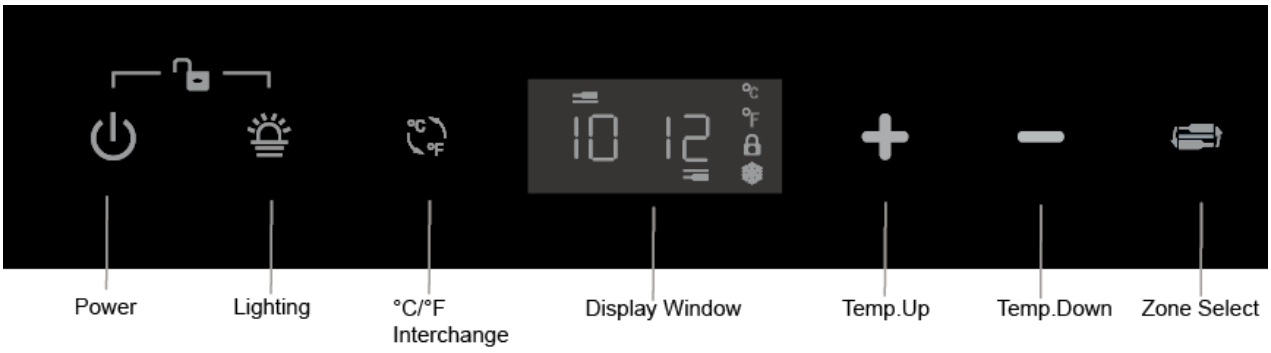

2. Single Zone

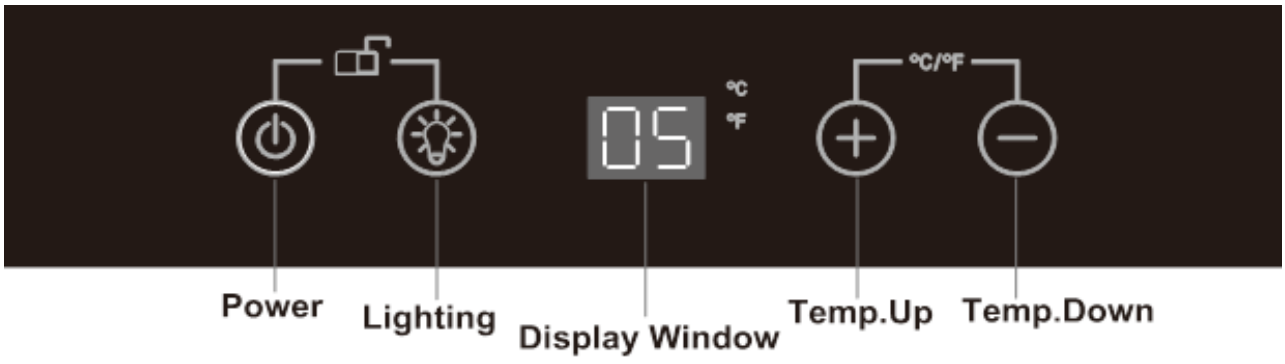

Power:	Turns the Wine Cellar System ON and OFF
Lighting:	Turns the Interior Light ON and OFF
Power & Lighting:	Press Both Simultaneously to Lock or Unlock the Control Panel
Temp Up & Down:	**Single Zone Only –** Pressing together alters the Temperature Display to Fahrenheit or Celsius
°C/°F:	**Dual Zone Only -** Alters the Temperature Display to Fahrenheit or Celsius
Display Window:	Displays Temperature
Temp. Up	Increases Set Temperature
Temp. Down	Decreases Set Temperature

Before You Start

The wine cellar should be placed in a location where the ambient temperature is between 60-80° Fahrenheit. If the ambient temperature is above or below this range, the performance of the unit may be affected. For example, placing your unit in extreme cold or hot conditions may cause interior temperatures to fluctuate.

Setting the Temperature Control

NOTE: The temperature readout shows the actual cellar temperature, it will temporarily show the set temperature while making adjustments, then reverts back after 10 seconds.

1. Make sure power cord is connected to a properly grounded outlet.
2. Turn power ON.
3. Use the Zone Select (Dual Zone models only) to select the Upper or Lower zone. **Upper zone must be set 4°F colder than lower zone.**
4. Set the desired temperature by pushing the UP or DOWN button.
5. Temperatures increase or decrease 1°F with each push of the UP or DOWN button.

NOTE: Temperatures may fluctuate depending on whether the interior light is ON or OFF and depending on the position of the bottles.

Lock or Unlock the Control Panel

To LOCK the control panel:

1. Simultaneously press the Power and Lighting buttons.
2. The control panel will beep (Dual & Single Zone) and the LOCK icon will illuminate (Dual Zone only)
3. The control panel will 'sleep' after left untouched for 10 seconds (Dual Zone only). Touch any button to wake it up before making adjustments.

To UNLOCK the control panel:

1. Touch the control panel to wake it up from sleep mode (Dual Zone only)
2. Simultaneously press the Power and Lighting buttons.
3. The control panel will beep (Dual & Single Zone) and the LOCK icon will darken (Dual Zone only)

Removing the Rolling Shelf

1. Remove all bottles.
2. Pull out the shelf as far as possible.
3. Hold one of the telescopic rails with one hand, with the other hand gently lift the front of the shelf from the front tab, then push backward to unlock from the rear hook.
4. Repeat with the other side

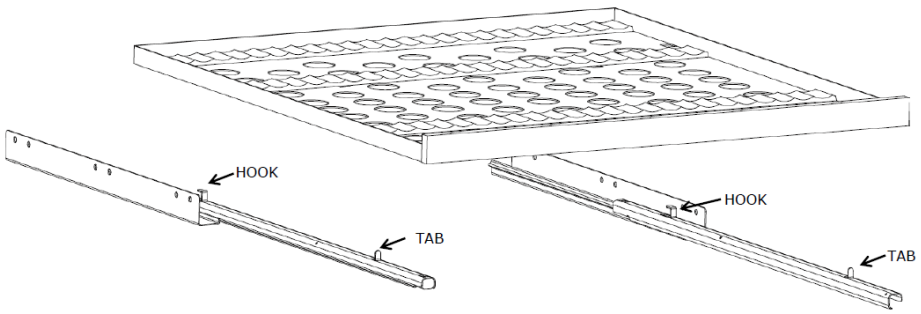

Temperature Settings for Serving Wine

Although optimal storage temperature is generally regarded to be 53-57°F, different varietals of wine require different service temperature settings. The recommended temperature ranges for serving different varietals of wine are listed below. Your wine cellar will indicate when you have set the Upper/Lower zones to the below temperature ranges.

Red Wines:	60-66°F
White Wines	45-52°F
Sparkling Wines	40-45°F

Interior Light

• To complement the look of your wine collection, a soft light has been built into the wine cellar. Simply push the "Light" button and the light comes on, push again for off. For maximum energy efficiency, leave light off when not viewing your collection.

Door Lock

• This unit comes with key lock.
• The keys are located inside the plastic bag along with the user manual. To unlock the door, insert the key into the lock and turn counter clockwise.
• To lock the door, simply reverse the operation making sure the metal pin is engaged completely.
• Then remove the key and place it is a secure place for safekeeping.

Normal Operating Sounds You May Hear

• Boiling water, gurgling sounds or slight vibrations that are the result of the refrigerant circulating through the cooling coils.
• The thermostat control will click when it cycles on and off.

Technical Data

N'Finity Pro S Wine Cellar	Single Zone	Dual Zone
Total Volume	**5.12 Cu. Ft.**	
Installation	**Free-Standing or Built-In**	
Power	**115V~60Hz**	
Current	**1.6A**	
Protection Class	**I**	
Climate Class	**T**	
Start-Up Amps	**7.3A**	
Running Amps	**1.6A**	
Ambient Temperature	**60 - 80°F**	
Refrigerant	**R600a – 0.88 oz.**	
Temperature Control Range	**41 to 66°F**	**Upper Zone: 41°F to 54°F** **Lower Zone: 54°F to 66°F**
Approx. Net Weight	**128 LBS**	
Dimensions (W x D x H)	**23-3/4" x 25" x 34-1/4"** **Handle will add 2" to depth.**	

Proper Wine Cellar Care and Cleaning

Cleaning and Maintenance

Warning: To avoid electric shock always unplug your wine cellar before cleaning. Ignoring this warning may result in death or injury.

Caution: Before using cleaning products, always read and follow manufacturer's instructions and warnings to avoid personal injury or product damage.

General:
- Prepare a cleaning solution of 3-4 tablespoons of baking soda mixed with warm water. Use sponge or soft cloth, dampened with the cleaning solution, to wipe down your wine cellar.
- Rinse with clean warm water and dry with a soft cloth.
- Do not use harsh chemicals, abrasives, ammonia, chlorine bleach, concentrated detergents, solvents or metal scouring pads. Some of these chemicals may dissolve, damage and/or discolor your wine cellar.

Door Gaskets:
- Clean door gaskets every three months according to general instructions. Gaskets must be kept clean and pliable to assure a proper seal.
- Petroleum jelly applied lightly on the hinge side of gaskets will keep the gasket pliable and assure a good seal.

Power Interruptions

- Occasionally there may be power interruptions due to thunderstorms or other causes. Remove the power cord from AC outlet when a power outage occurs. When power has been restored, **wait 3 to 5 minutes** then re-plug the power cord to AC outlet.

Vacation and Moving Care

• For long vacations or absences, unplug the wine cellar and clean the wine cellar and door gaskets according to "General cleaning" section. Leave doors open, so air can circulate inside.

• When moving always move the wine cellar vertically. Do not move with the unit lying down, as possible damage to the sealed system could occur.

Note: After moving, wait for 24 hours before plugging in the wine cellar.

Troubleshooting

Many common issues with your wine cellar can be easily solved. Try the troubleshooting tips below if you experience any problems.

Wine Cellar Does Not Operate:

• Check if wine cellar is plugged in.

• Check if there is power in the AC outlet, by checking the circuit breaker.

Wine appears too warm:

• Frequent door openings.

• Allow time for recently added wine to reach desired temperature.

• Check gaskets for proper seal.

• Clean condenser coils.

• Adjust temperature control to colder setting.

Wine temperature is too cold:

• If temperature control setting is too cold, adjust to a warmer setting.

Wine cellar runs too frequently:

• This may be normal to maintain constant temperature during high temperature and humid days.

• Doors may have been opened frequently or for an extended period of time.
• Clean condenser coils.
• Check gasket for proper seal.
• Check to see if doors are completely closed.

Moisture build-up on interior or exterior of the wine cellar:

• This is normal during high humidity periods.
• Prolonged or frequent door openings.
• Check door gaskets for proper seal.

Wine cellar door does not shut properly:

• Level the wine cellar.
• Check for blockages e.g. wine bottles, shelves.

Limited Warranty

This Warranty Covers Appliances Within The Continental United States Only.

Length of Warranty: This Limited Warranty lasts for one (1) year from date of receipt of purchase of the wine cellar ("Limited Warranty Period") and the sealed system (compressor, condenser, evaporator) will be covered for three (3) years. Extended warranties may be available for an additional cost at the time of purchase or up to the seventh month from date of purchase. These extended warranties would extend this one (1) year limited warranty to two (2), three (3), or five (5) years. Details about our extended protection plans can be found @ wineenthusiast.com.

Who is Protected: This Limited Warranty protects the original purchaser during the Limited Warranty Period, provided that such purchaser can present appropriate proof of original purchase.

What is Covered: This Limited Warranty covers any defects in workmanship or materials in your new wine cellar under normal use.

What is Not Covered: The following are not covered by this Limited Warranty damage due to such things as accident, misuse, abuse, mishandling, neglect, unauthorized repair, failure to properly maintain, acts of God or any other cause beyond the reasonable control of the Wine Enthusiast whether similar or dissimilar to the foregoing.

Purchaser understands and acknowledges that the wine cellar is a wine refrigerator, which houses wine. Purchaser assumes all the risk of using these units, including risk of spoilage, humidity variations, temperature variations, leaks, fires, water damage, mold, mildew, dryness and similar perils that may occur.

What We Will Do: During the Limited Warranty Period, Wine Enthusiast and/or the manufacturer will, at its sole discretion, repair or replace any wine cellar not operating within the manufacturer's specifications. All costs for labor and materials thereto shall be covered during the Limited Warranty Period. If Wine Enthusiast deems the wine cellar is not repairable, Wine Enthusiast will use the value of your original order toward a replacement; provided, however, that the purchaser will be responsible for all shipping and handling costs with respect to the replacement after the initial ninety (90) days after the date of receipt of original purchase. ***After the initial ninety (90) day period after the date of receipt of purchase, purchaser must pay any shipping and handling charges that are incurred in shipping or transporting the wine cellar for service***

under this Limited Warranty. Wine Enthusiast reserves the right to substitute materials of substantially similar quality in the event that identical materials are not available at the time the Limited Warranty services are performed. Wine Enthusiast reserves the right to request that purchaser contact a local refrigeration company to service the wine cellar.

How to get Warranty Service: In the event your wine cellar is not operating within the manufacturer's specifications, during the Warranty Period, contact customer service by email at custserv@WineEnthusiast.net or by phone 800.648.6058.

Limitation of Implied Warranties: All implied warranties, including warranties of merchantability and fitness for a particular purpose, are limited in duration to the length of this Limited Warranty.

Exclusion of Certain Damages: Wine Enthusiast's liability is limited to replacement or repair of the defective wine cellar. Wine Enthusiast shall not be liable for any damages, whether incidental, consequential or otherwise, because of any defective wine cellar.

How State Law Applies: Some states do not allow limitations on how long an implied warranty lasts and/or do not allow the exclusion of incidental or consequential damages, so the above limitations and exclusions may not apply to you. The Limited Warranty gives you specific legal rights, and you may also have other rights which vary from state to state.

Wine Enthusiast
Valhalla, NY 10595