UNDERCOUNTER USE & CARE GUIDE



Caring for your Sub-Zero and everything in it.

SUB-ZERO®



SUB-ZERO® is a registered trademark of Sub-Zero, Inc.

CONTENTS

Sub-Zero Undercounter Refrigeration	3
Sub-Zero Undercounter Models	4
Sub-Zero Undercounter Features	7
Sub-Zero Undercounter Use & Care	8
Troubleshooting Guide	14
Service Information	17
Sub-Zero Warranties	18

As you read this use & care guide, take particular note of the CAUTION and WARNING symbols when they appear. This information is important for safe and efficient use of the Sub-Zero equipment.

⚠ CAUTION

signals a situation where minor injury or product damage may occur if you do not follow instructions.

⚠ WARNING

states a hazard that may cause serious injury or death if precautions are not followed.

In addition, this use & care guide may contain an IMPORTANT NOTE which highlights information that is especially important.

THANK YOU

Thank you for purchasing your new Sub-Zero undercounter unit. Undercounter units simplify life at home by bringing refrigeration anywhere it's needed. Fresh greens in the kitchen island. Ice, soda and snacks in the media room. Chilled mineral water in the master suite. Imagine how these innovative undercounter units can serve you.

Your Sub-Zero undercounter model is protected by a warranty that is one of the finest in the industry. Take a moment to read the warranty statement on pages 18–19 and refer to it should service become necessary.

This use & care guide will answer most of your questions about the features, operation and maintenance of your undercounter unit. If you have questions that are not addressed here, call Sub-Zero customer service at 800-222-7820 or visit our website, subzero.com.

CONTACT INFORMATION

Sub-Zero
Customer Service:
800-222-7820

Website:
subzero.com

MODEL UC-24R

ALL REFRIGERATOR

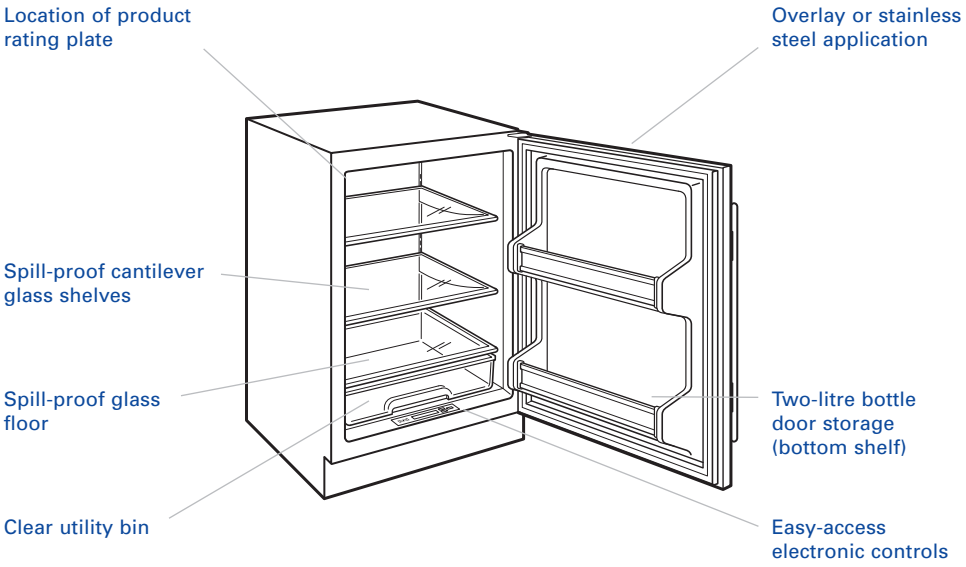

WARRANTY

Sub-Zero products are covered by a two, five and twelve year residential warranty (one and five year warranty for model UC-24RO). See warranty details at the end of this guide.

MODEL UC-24C(I)

REFRIGERATOR/FREEZER

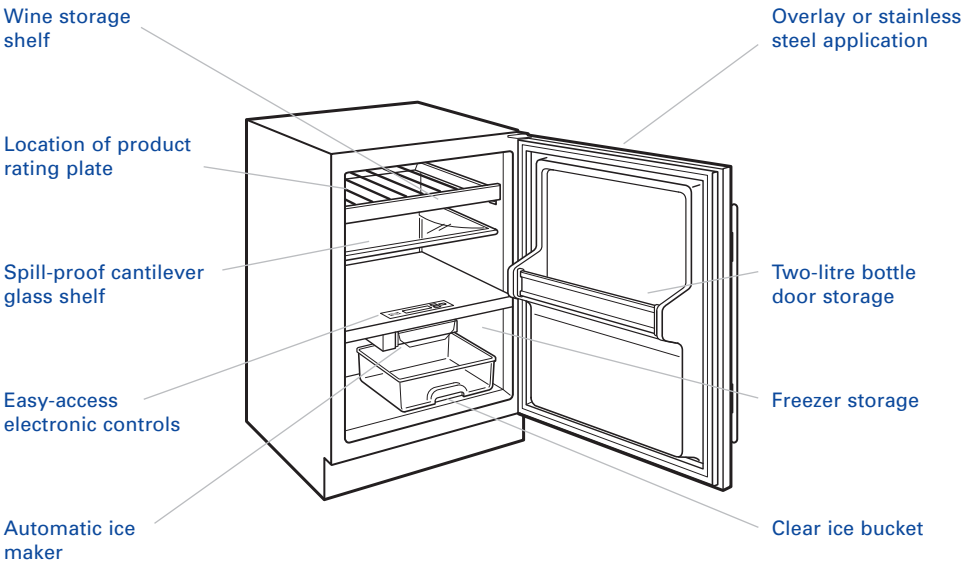

MODEL UC-24BG

BEVERAGE CENTER WITH GLASS DOOR

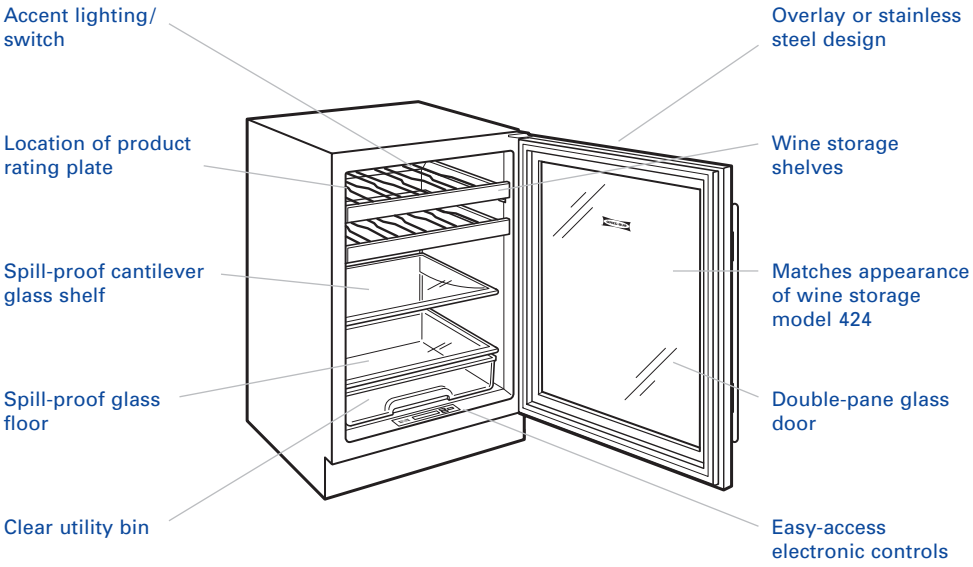

MODEL UC-24BS

BEVERAGE CENTER WITH SOLID DOOR

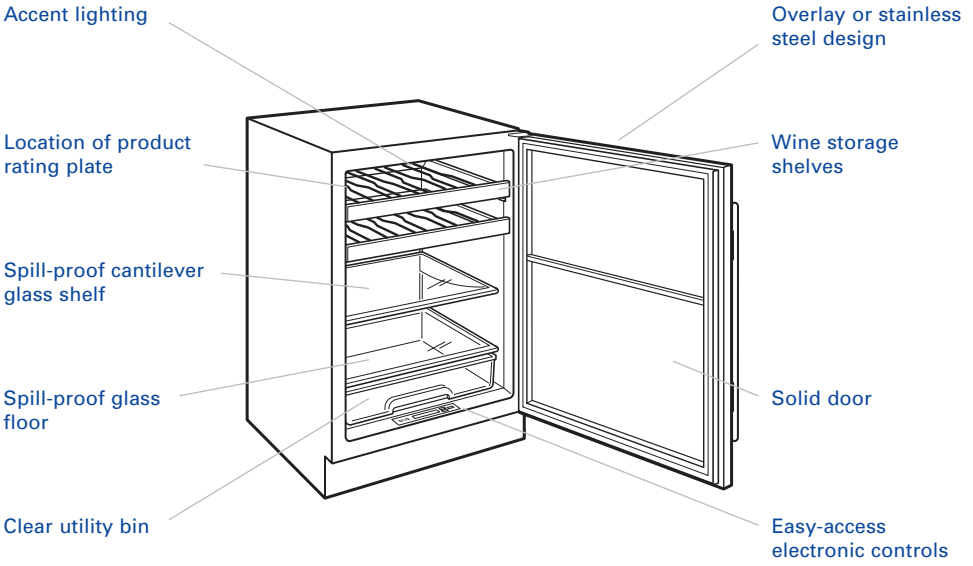

MODEL UC-24RO

OUTDOOR ALL REFRIGERATOR

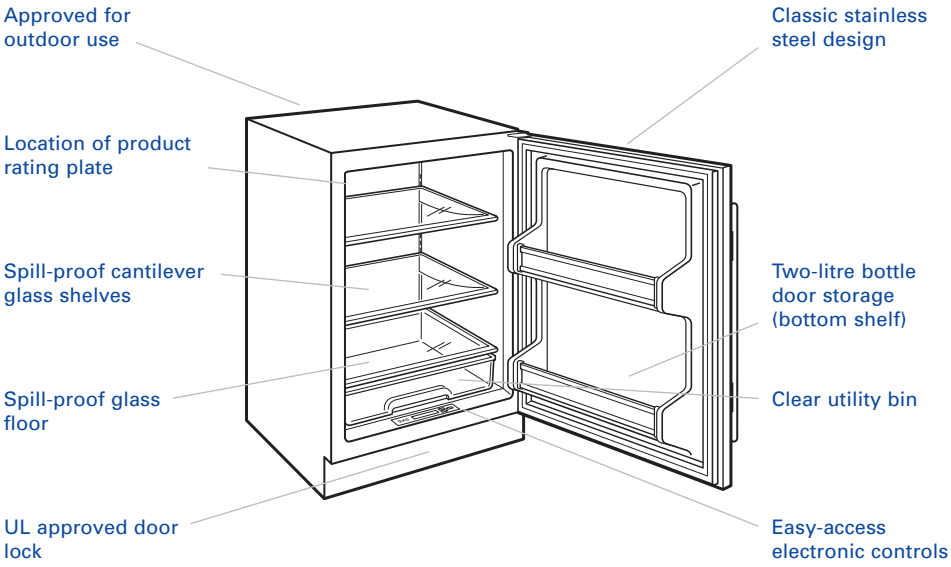

WARRANTY

Sub-Zero products are covered by a two, five and twelve year residential warranty (one and five year warranty for model UC-24RO). See warranty details at the end of this guide.

UNDERCOUNTER FEATURES

- All undercounter units are designed to be built in for that custom Sub-Zero look.
- Models UC-24R and UC-24C(I) can be fitted with a custom overlay or stainless steel door front panel. A classic stainless steel panel with handle is available as a sales accessory for these models.
- Model UC-24RO is available only in classic stainless steel and comes complete with door front panel and handle installed.
- Models UC-24BG and UC-24BS must be ordered as an overlay unit or a classic stainless steel unit .
- Electronic controls with digital readout LCD display are up front and easy to access.
- The cantilevered glass shelves are adjustable, easy to clean and spill proof. The glass floor is also spill proof.
- All units except model UC-24C(I) feature a clear utility bin for storage of smaller items.
- Models UC-24BG, UC-24BS and UC-24C(I) feature wine storage of 16 and up to 8 (750 ml) bottles, respectively. The roller-glide wine storage shelves faced with natural cherry wood have a three-quarter extension for easy access.
- The full-view glass door and accent lighting of model UC-24BG matches the appearance of wine storage model 424.
- Bright lighting provides even illumination throughout the interior.
- An indicator in the LCD display will alert you if service may be necessary.
- Model UC-24C(I) refrigerator/freezer features an automatic ice maker with clear ice bucket. The ice maker provides high-quality, crescent-shaped ice that won't stick to the side of the glass.
- All units except models UC-24BG and UC-24BS feature two-litre bottle storage in the bottom door shelf.
- A UL approved lock is standard on model UC-24RO and available as a sales accessory for all other models.
- Sabbath mode will allow the lights to remain off during certain religious observances.
- The solid, adjustable kickplate gives a true built-in look and conforms to American Institute of Architects standards.
- Undercounter models are designed for mechanical system airflow at the front of the unit.
- Undercounter units are UL approved for US and Canada.
- Undercounter units offer the Sub-Zero two, five and twelve year residential warranty—one and five year warranty for model UC-24RO. Warranty information can be found on pages 18–19.



These appliances are Star-K compliant to meet strict religious regulations in conjunction with specific instructions found on www.star-k.org.

ELECTRONIC CONTROLS

The electronic controls of your Sub-Zero undercounter unit monitors and accurately displays temperatures within one degree of your preset temperature. It also monitors operation of the unit and lets you know if there's a problem.

A microprocessor accurately samples the temperature every second in each zone to be sure the temperatures stay within one degree of your preset temperatures. It also monitors the unit's operation and will let you know if service may be necessary.

TEMPERATURE CONTROL

To adjust the temperature in either section, press the **WARMER** or **COLDER** key pads on the control panel.

The temperature ranges are 34˚F (1˚C) to 45˚F (7˚C) in the refrigerator section, and -5˚F (-21˚C) to +5˚F (-15˚C) in the freezer section. It is normal for temperatures to fluctuate slightly, depending on external influences such as an open door, the degree of humidity and room temperature.

LCD DISPLAY

Electronic control functions, such as digital temperatures and service indicators, are shown in the LCD display, located on the control panel. If you are using your unit frequently, the numbers may fluctuate.

The temperature readout in the LCD display will be visible through the glass door of model UC-24BG.

UNIT ON/OFF

The **UNIT ON/OFF** key pad on the control panel will shut off all electrical power to the undercounter unit for cleaning or service.

SABBATH MODE (STAR-K)

All undercounter units feature the Sabbath mode. This is for certain religious observances where the lights need to be turned off. Sabbath mode will not disable the ice maker.

To initiate Sabbath mode, while the unit is on, press the **UNIT ON/OFF** key pad so that OFF is visible in the LCD display. The unit will be off.

Then press and hold the **UNIT ON/OFF** key pad for 10 seconds. This will turn the unit back on and will disable the lights. To return the unit to normal lighting, press and release the **UNIT ON/OFF** key pad.

If you have questions about Star-K compliance, visit www.star-k.org.

VISUAL SERVICE DISPLAY

The microprocessor monitors temperatures inside the unit. If there is a temperature problem, you'll be alerted by a flashing SERVICE indicator. The same SERVICE indicator will also flash if the condenser needs cleaning. Before calling for service, please check and see if your condenser area needs cleaning. Refer to condenser cleaning on page 13.

REFRIGERATOR STORAGE

ADJUSTABLE GLASS SHELVES

To remove or adjust shelves, first tilt the shelf up at the front, then lift it up and out of the tracks on the rear wall of the unit. Refer to the illustration below.

If the door is limited to a 90° opening, you'll need to clear the door shelves in order to remove a shelf. Lift and pivot the end of the shelf nearest the door upward, and remove.

To replace a shelf, insert it in the tracks at the rear of the refrigerator with the front of the shelf raised slightly. As you push the shelf in, lower the front of the shelf until it locks into position.

IMPORTANT NOTE: Always be careful in handling glass shelves to prevent breaking or scratching the interior.

UTILITY BIN

The clear utility bin slides in and out so that you can access small containers and food items easily.

To remove the bin, simply pull the bin straight out. Replace the bin using the reverse process.

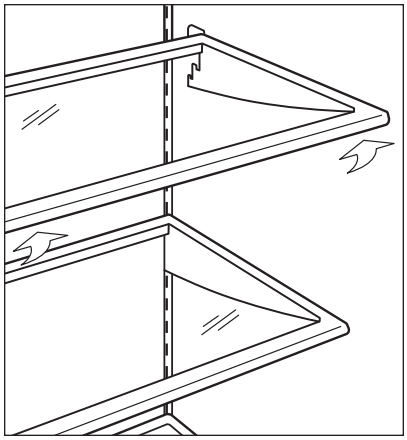

Adjustable glass shelf removal

DESIGN GUIDE

Details on how to replace the cherry wood facing on the wine storage shelves can be found in the Sub-Zero design guide. Check our website at subzero.com or call Sub-Zero at 800-222-7820.

WINE STORAGE

MODELS UC-24BG, UC-24BS, UC-24C(I)

Undercounter models UC-24BG, UC-24BS and UC-24C(I) feature shelves for wine storage. The roller-assembly shelves with a full three-quarter extension for allow easy access to stored 750 ml bottles.

The wine storage shelves have a solid natural cherry wood facing that can be replaced with other wood to match your cabinetry. Details on how to replace the cherry wood facing on the shelves can be found in the Sub-Zero design guide. Check our website at subzero.com or call Sub-Zero at 800-222-7820.

IMPORTANT NOTE: If you choose to stain or seal the shelves' natural cherry wood facing, be aware that some of these substances are hazardous and will damage stored wine.

WINE STORAGE SHELF REMOVAL

To remove a wine storage shelf, pull the shelf out to its full extension, gently and evenly lift up on both sides of the front of the shelf and remove. Refer to the illustration below. Reverse the procedure to reinstall the shelf.

⚠ CAUTION

Be sure to unload all bottles from the wine storage shelf before removing it.

FREEZER STORAGE

MODEL UC-24CI

Model UC-24CI refrigerator/freezer features an automatic ice maker with clear ice bucket.

The ice bucket is removed by pulling it straight out. Reinstall using the reverse process.

ICE MAKER OPERATION

The ice maker in the model UC-24CI freezer is fully automatic and has been tested at the factory.

The level of ice in the ice container is controlled by an ice level arm. When the container is filled with ice, the ice level arm senses the level and shuts down the ice maker. As ice is used, the level drops and the ice level arm signals the ice maker to restore ice production.

To shut off the ice maker, lift the ice level arm up or to the off position.

ICE PRODUCTION

The ice maker is designed to produce enough ice for normal family use. The timing of ice-making cycles will vary depending on load conditions, door openings and room temperature. On average, you can expect a cycle of ice (eight cubes per cycle) every two hours until the container is full.

The ice maker operates on water pressure of 20 to 100 psi. In some cases, a reverse osmosis water filter system may not be able to maintain the minimum pressure.

IMPORTANT NOTE: If ice is not used regularly it tends to fuse together. To avoid this, empty and replace the ice in the container as needed.

AUTOMATIC DEFROST

Your Sub-Zero unit is equipped with an automatic defrost system. The refrigerator section will defrost during each off cycle of the refrigerator compressor. The freezer section for model UC-24C(I) is controlled by an energy-saving adaptive defrost system, which defrosts as needed.

DOOR CLOSING

The door of your undercounter unit has a spring-loaded closure mechanism. As the door is closed, the door closer engages to help close and seal the door.

VACATION TIME

For extended vacations, shut off power to the unit. Empty the unit and block the doors open slightly to let fresh air in and keep the interior dry and fresh smelling.

For short vacations, remove all perishable items. Shut off the ice maker and empty the ice bucket. Do not change the control settings.

If your religious observances require turning off the lights, refer to Sabbath mode, page 8.

SOUNDS

You may hear some noises in the normal operation of the unit. Surrounding acoustics like walls, floors and cabinets may affect the sound of your unit. Some noises may be enhanced when the door is open.

While the compressor is in operation, you may hear a slight hum. During the start-up and shutdown of the compressor, you may feel vibration for a few seconds.

During the ice maker cycle (model UC-24CI), you may hear the sound of ice dropping into the container or the solenoid valve operating while refilling the ice maker with water.

CLEANING

STAINLESS STEEL EXTERIOR

SIGNATURE POLISH

Signature polish is available from Signature Limited Laboratory, P. O. Box 13436, Dayton, Ohio 45413, or call 877-376-5474.

To clean the classic stainless steel exterior, use a soft, nonabrasive stainless steel cleaner like Signature polish and apply with a soft 100% lint-free cloth. To bring out the natural luster, lightly wipe the surface with a water-dampened microfiber cloth followed by a dry polishing chamois. All work should follow the grain direction of the finish. Better results are obtained by keeping the cloth in continuous contact with the stainless steel.

⚠ CAUTION

Under no circumstances should you use a metallic or highly abrasive cleaner or cloth, as this will scratch the classic stainless steel finish.

GLASS DOOR CLEANING

The glass door panel of model UC-24BG can be cleaned using any standard glass cleaner available on the market today.

INTERIOR CLEANING

To clean interior surfaces and removable parts, wash with a mild solution of soap and luke-warm water with a little baking soda. Do not use vinegar. Rinse and dry thoroughly. Avoid getting water on lights, control panel and LCD display.

IMPORTANT NOTE: Do not use abrasive cleaners or cloths on any of the interior or exterior surfaces, including the glass door panel.

⚠ CAUTION

Before cleaning the unit, shut the electricity off at the control panel.

⚠ CAUTION

Do not submerge or pour hot water over cold glass shelves.

CLEANING

CONDENSER CLEANING

Clean the condenser area every three to six months. The cleaning schedule will depend on the amount of dust and lint that accumulates in this area.

The condenser is located behind the kickplate. Remove the kickplate to expose the condenser area. Refer to the illustration below. Use a soft bristle brush and vacuum hose to remove dust and lint from the condenser area. To avoid bending the condenser fins, be sure to vacuum in the direction of the fins (up and down).

⚠ CAUTION

Before cleaning the condenser, shut the electricity off at the control panel. When you clean the condenser, wear gloves to avoid injury from the sharp condenser fins.

⚠ CAUTION

Failure to clean the condenser could result in temperature loss or mechanical failure or damage.

LIGHTING INFORMATION

Model UC-24BG has rope-style lighting mounted to the top interior of the cabinet that cascades down the sides of the unit.

All undercounter models have a recessed light bulb in the ceiling of the unit. To change the bulb, remove the 25-watt bulb by unscrewing it from the socket. Install a new 25-watt bulb. Refer to the illustration below.

⚠ WARNING

Shut off power to the unit before replacing the light bulb. Wear protective gloves when handling bulbs.

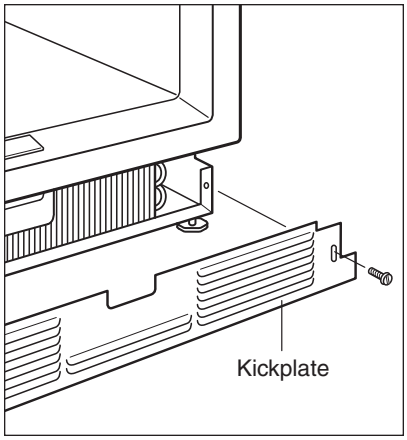

Condenser location

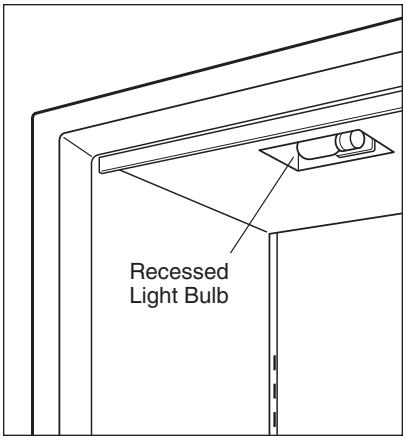

Light bulb location

TROUBLESHOOTING

If your undercounter unit is not operating properly, use the following troubleshooting guide before calling your Sub-Zero authorized service center. This guide will save you time and trouble and may help you avoid the expense of a service call.

CONTACT INFORMATION

Sub-Zero Customer Service: 800-222-7820

Website: subzero.com

SERVICE is flashing in the LCD display.

- This may indicate that the condenser needs cleaning. Follow the condenser cleaning procedure outlined on page 13.
- This happens when the unit runs too long. A temperature sensor may be faulty. If this occurs, turn the unit off with the **UNIT ON/OFF** key pad and then restart by pressing the key pad again. If SERVICE is still flashing, call Sub-Zero customer service at 800-222-7820.

Undercounter unit is not operating.

- Is there electrical power to the unit?
- Is the home circuit breaker or fuse off?
- Is the condenser area clean?
- Has the door been left open for an extended period? Be sure that food is not obstructing proper door closing.
- If the unit is still not running, it may be in defrost mode.
- Wait 30 minutes and try to restart again.

Undercounter unit is warmer than usual.

- Is the control set properly?
- Is the temperature set properly?
- Is the condenser area clean?
- Is the air inlet blocked?
- Has the door been left open for an extended period? Be sure that food is not obstructing proper door closing.
- Has a large amount of food been added recently?

Undercounter unit runs for long periods of time.

- Is the condenser area clean?
- Has the door been left open for an extended period? Be sure that food is not obstructing proper door closing.
- Has a large amount of food been added recently?
- On hot days and in warm room temperatures, the motor runs longer.
- There may be normal operation noises related to refrigerant circulation, fan operation, ice maker operation, defrost cycle or compressor operation.

Undercounter unit is frosted up.

- Has the door been left open for an extended period? Be sure that food is not obstructing proper door closing.
- Is the door closing and sealing properly? Contact your dealer if the door is not adjusted properly.

You hear unusual noises.

- These noises may be normal operating sounds related to refrigerant circulation, fan operation, ice maker operation, defrost cycle or compressor operation. Noises may be more noticeable when the door is open.

TROUBLESHOOTING

You hear occasional buzzing.

- Is the water supply connected to ice maker and turned on (model UC-24CI)?

Condensation forms inside the unit.

- This is normal during periods of higher humidity (summer) and with frequent door openings.
- Is the door closing and sealing properly?

Condensation forms outside the unit.

- During periods of high humidity, some condensation may appear on outside surfaces. The condensation will disappear when the humidity drops. Be sure that the door is closing and sealing properly. If condensation persists, contact your Sub-Zero authorized service center.

Outside of the freezer section heats up.

- Clean the condenser area.

There is no ice (model UC-24CI).

- Is the ice container in position and the ice maker turned on?
- Is the water supply connected?

There is an odor inside the unit.

- Clean the unit thoroughly and make sure all food is covered tightly.

Light bulb needs to be replaced.

- See lighting information, page 13.

You need product information.

- Call Sub-Zero customer service at 800-222-7820 or visit our website, subzero.com, for planning, installation and product information.

You need service.

- If service is necessary, maintain the quality built into your Sub-Zero unit by calling a Sub-Zero authorized service center.
- To obtain the name and number of a Sub-Zero authorized service center, check the contact & support section of our website, subzero.com or call Sub-Zero customer service at 800-222-7820.
- When calling for service, you will need the model and serial number of your unit. Both numbers are listed on the product rating plate located inside the cabinet, in the upper left area of the unit.

FREQUENTLY ASKED QUESTIONS

TEMPERATURE

IMPORTANT NOTE: Unless the unit is being serviced, make sure the power for your unit is on. If the unit is not on, OFF will be visible in the LCD display.

Q: How do I adjust the temperatures?

A: To adjust temperatures, refer to temperature control, page 8.

Q: What are the suggested temperature settings?

A: The recommended settings are 38˚F (3˚C) for the refrigerator section and 0˚F (-18˚C) for the freezer section.

Q: Condensation is forming on the inside and outside of my unit.

A: In climates with higher humidity, condensation will form and is considered normal. Leaving the door open for a long period of time may also contribute to condensation forming on the inside your unit.

Q: My unit isn't cooling properly.

A: Clean the condenser area as outlined on page 13.

NOISE

Q: Why do I hear my unit running constantly?

A: It is normal to hear the operation of the fan and motor. Sounds will be accentuated based on the placement of the unit and overall room design.

ICE PRODUCTION (MODEL UC-24CI)

IMPORTANT NOTE: Make sure that the ice level arm is not in the up or off position.

IMPORTANT NOTE: Dispose of the first bucket of ice produced by your new unit to ensure that pipe residue or other particles associated with new water lines are not consumed.

Q: My ice maker isn't producing very much ice.

A: On average, you can expect a cycle of ice (eight cubes per cycle) every two hours.

Q: My ice is freezing together and clumping.

A: If ice is not used regularly it tends to fuse together. You may need to discard the ice and allow ice to be replenished.

Q: My ice tastes funny and is discolored.

A: Model UC-24CI does not have an integrated water filtration system. Contact a local plumber to discuss water filtration options.

DOOR OPERATION

Q: Why is my door hard to open?

A: Your unit was designed for an airtight seal. A vacuum seal can form after the door is closed. Wait several seconds for pressure to equalize before reopening the door.

Q: The door on my unit is opening too fast and hitting the wall or surrounding cabinets.

A: The unit may not be leveled properly.

CONTACT INFORMATION

Sub-Zero Customer Service: 800-222-7820

Website: subzero.com

SERVICE INFORMATION

This use & care guide gives you the tools necessary to preserve food at optimum quality in your undercounter unit. Keep the door closed as much as possible whenever the unit is operating.

If you do need service, be sure to have the model and serial numbers when you call. You'll find these numbers listed on the product rating plate located inside the cabinet, in the upper left area of the unit. For warranty purposes, you will also need the date of installation and the name of your Sub-Zero dealer. Record this information below for future reference.

Model Number _____

Serial Number _____

Installation Date _____

Sub-Zero Authorized Service Center and Phone

_____

Sub-Zero Dealer and Phone

_____

BEFORE CALLING FOR SERVICE

Before calling a Sub-Zero authorized service center, refer to the troubleshooting guide on pages 14–17. Check the household fuse or circuit breaker to see if it has been blown or tripped and that the electrical connection to the appliance has not been disconnected. A power outage may also have caused a disruption in service.

PRODUCT REGISTRATION

Register your new Sub-Zero today so that we may ensure your satisfaction. You may register by one of the following options:

1) Mail in the completed Sub-Zero product registration card.
2) Register online at **subzero.com**.
3) Register by phone by calling Sub-Zero customer service at **800-222-7820**.

The model and serial numbers of your unit are printed on the enclosed Sub-Zero product registration card. If you provide us with your e-mail address, we will send you exciting new product updates and recipes as they become available, along with information on special events.

The information and images in this guide are the copyright property of Sub-Zero, Inc. Neither this guide nor any information or images contained herein may be copied or used in whole or in part without the express written permission of Sub-Zero, Inc.

©Sub-Zero, Inc. all rights reserved.

Sub-Zero Products Limited Warranty

RESIDENTIAL USE ONLY

FULL FIVE YEAR SEALED SYSTEM WARRANTY
LIMITED SIXTH THROUGH TWELFTH YEAR WARRANTY ON THE SEALED SYSTEM
FULL TWO YEAR WARRANTY ON TOTAL PRODUCT*

FULL FIVE YEAR SEALED SYSTEM WARRANTY

For five years from the date of original installation, your Sub-Zero warranty covers all parts and labor to repair or replace any components that prove to be defective in materials or workmanship in the sealed system. The sealed system consists of the compressor, condenser, evaporator, drier and all connecting tubing.

FULL TWO YEAR WARRANTY*

For two years from the date of original installation, your Sub-Zero warranty covers all parts and labor to repair or replace any part of the product, that proves to be defective in materials or workmanship.

LIMITED SIXTH THROUGH TWELFTH YEAR SEALED SYSTEM WARRANTY

From the 6th through the 12th year from the date of original installation, your Sub-Zero warranty covers all parts that prove to be defective in materials or workmanship in the sealed system (parts only). The sealed system consists of the compressor, condenser, evaporator, drier and all connecting tubing.

TERMS APPLICABLE TO EACH WARRANTY

All service provided by Sub-Zero under the above warranty must be performed by a Sub-Zero authorized service center, unless otherwise specified by Sub-Zero. Service will be provided in the home during the normal business hours. This warranty applies only to products installed for normal residential use. Details regarding a non-residential warranty are available upon request.

The warranty applies only to products installed in any one of the fifty states of the United States, the District of Columbia or the ten provinces of Canada. This warranty does not cover any parts or labor to correct any defect caused by negligence, accident or improper use, maintenance, installation, service or repair, including but not limited to improper removal and reinstallation (whether in the unit or at a remote location) of the condensing unit.

THE REMEDIES DESCRIBED ABOVE FOR EACH WARRANTY ARE THE ONLY ONES THAT SUB-ZERO WILL PROVIDE, EITHER UNDER THESE WARRANTIES OR UNDER ANY WARRANTY ARISING BY OPERATION OF LAW. SUB-ZERO WILL NOT BE RESPONSIBLE FOR ANY CONSEQUENTIAL OR INCIDENTAL DAMAGES ARISING FROM THE BREACH OF THESE WARRANTIES OR ANY OTHER WARRANTIES, WHETHER EXPRESS, IMPLIED OR STATUTORY.

Some states do not allow the exclusion or limitation of incidental or consequential damages, so the above limitation or exclusion may not apply to you. This warranty gives you specific legal rights and you may also have other legal rights, which vary from state to state.

To receive parts and/or service and the name of the Sub-Zero authorized service center nearest you, contact your Sub-Zero dealer, distributor or Sub-Zero customer service, P. O. Box 44130, Madison, WI 53744; check the contact & support section of our website, subzero.com or call 800-222-7820.

*Stainless steel (classic, platinum and carbon) doors, panels, product frames and stainless interior surfaces are covered by a limited 60-day parts and labor warranty for cosmetic defects.

*Replacement water filter and air purification cartridges are not covered by the product warranty.

Sub-Zero Outdoor Products Limited Warranty

RESIDENTIAL USE ONLY

FULL FIVE YEAR SEALED SYSTEM WARRANTY
FULL ONE YEAR WARRANTY ON TOTAL PRODUCT*

FULL FIVE YEAR SEALED SYSTEM WARRANTY

For five years from the date of original installation, your Sub-Zero warranty covers all parts and labor to repair or replace any components that prove to be defective in materials or workmanship in the sealed system. The sealed system consists of the compressor, condenser, evaporator, drier and all connecting tubing.

FULL ONE YEAR WARRANTY*

For one year from the date of original installation, your Sub-Zero warranty covers all parts and labor to repair or replace any part of the product which proves to be defective in materials or workmanship.

TERMS APPLICABLE TO EACH WARRANTY

All service provided by Sub-Zero under the above warranty must be performed by a Sub-Zero authorized service center, unless otherwise specified by Sub-Zero. Service will be provided in the home during the normal business hours. This warranty applies only to products installed for normal residential use. Details regarding a non-residential warranty are available upon request.

The warranty applies only to products installed in any one of the fifty states of the United States, the District of Columbia or the ten provinces of Canada. This warranty does not cover any parts or labor to correct any defect caused by negligence, accident or improper use, maintenance, installation, service or repair, including but not limited to improper removal and reinstallation (whether in the unit or at a remote location) of the condensing unit.

THE REMEDIES DESCRIBED ABOVE FOR EACH WARRANTY ARE THE ONLY ONES THAT SUB-ZERO WILL PROVIDE, EITHER UNDER THESE WARRANTIES OR UNDER ANY WARRANTY ARISING BY OPERATION OF LAW. SUB-ZERO WILL NOT BE RESPONSIBLE FOR ANY CONSEQUENTIAL OR INCIDENTAL DAMAGES ARISING FROM THE BREACH OF THESE WARRANTIES OR ANY OTHER WARRANTIES, WHETHER EXPRESS, IMPLIED OR STATUTORY.

Some states do not allow the exclusion or limitation of incidental or consequential damages, so the above limitation or exclusion may not apply to you. This warranty gives you specific legal rights and you may also have other legal rights, which vary from state to state.

To receive parts and/or service and the name of the Sub-Zero authorized service center nearest you, contact your Sub-Zero dealer, distributor or Sub-Zero customer service, P. O. Box 44130, Madison, WI 53744; check the contact & support section of our website, subzero.com or call 800-222-7820.

*Stainless steel (classic, platinum and carbon) doors, panels, product frames and stainless interior surfaces are covered by a limited 60-day parts and labor warranty for cosmetic defects.



SUB-ZERO®

SUB-ZERO, INC. P. O. BOX 44130 MADISON, WI 53744 SUBZERO.COM 800.222.7820

7011535 12/2008