GRUNDIG

Refrigerator

User manual

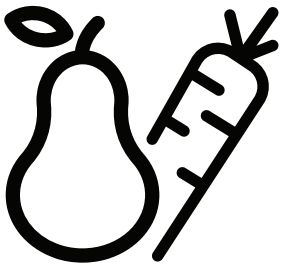

GKNG47920DX - GKN67920DX - GKN67920Z

CE

EN /

58 4594 0000/AD

ENG

Contents

1. Safety and environment instructions 3
1.1. General safety 3
1.1.1 HC warning 5
1.1.2 For models with water dispenser 5
1.2. Intended use 5
1.3. Child safety 5
1.4. Compliance with WEEE Directive and Disposing of the Waste Product 5
1.5. Compliance with RoHS Directive 6
1.6. Package information 6

2. Your Refrigerator 7

3 Installation 8
3.1 Appropriate installation location 8
3.2 Installing the plastic wedges . 9
3.3 Adjusting the feet 9
3.4 Electrical connection 9
3.5 Reversing the doors 10
3.6 Reversing the doors 11

4 Preparation 12
4.1 Things to be done for energy saving 12
4.2 Initial use 13

5 . Using your refrigerator 14
5.1 Indicator panel 14
5.2 Ice bucket 17
(This feature is optional) 17
5.3 Egg holder 17
5.4 Fan 17
5.5 Vegetable bin 17
(This feature is optional) 17
5.6 Zero degree compartment ... 17
(This feature is optional) 17
5.7 Using the second crisper of the product 18
5.8 Moving door rack 19
5.9 Sliding storage box 19
(This feature is optional) 19
5.10 Moisture controlled vegetable bin 19
(This feature is optional) 19
5.11 Automatic ice machine 20
(This feature is optional) 20
5.12 Icematic and ice storage container 21
5.13 Using the water dispenser . 21
5.14 Filling the water dispenser's tank 22
5.15 Cleaning the water tank ... 22
5.16 Drip tray 23
5.17 HerbBox/HerbFresh 24
5.18 Deodoriser Module 24
5.19 Freezing fresh food 25
5.20 Recommendations for preserving the frozen food 26
5.21 Deep-freeze information 26
5.22 Placing the food 27
5.23 Door open warning 27
5.24 Illumination lamp 27
5.25 Vitamin Care Technology ... 27

6. Maintenance and cleaning 28
6.1 Avoiding bad odours 28
6.2 Protecting the plastic surfaces 28

7. Troubleshooting 30

Please read these instructions first before using your appliance

Thank you for choosing a Beko appliance.

Please take some time to read this user manual before using your appliance, to ensure you know how to safely operate the controls and functions.

Carefully follow all unpacking and installation instructions to ensure the appliance is correctly connected and fitted prior to use.

Please write your product model and serial number on the last page of this user manual, and store in a safe location close to the appliance for easy future reference.

This user manual may also be applicable for several other models. Differences between models will be listed.

If you have any questions or concerns, please call our contact centre or find help and information online at www.beko.co.uk

Symbols and their descriptions

This instruction manual contains the following symbols:

Important information or useful usage tips.

Warning against dangerous conditions for life and property.

Warning against electric voltage.

INFORMATION

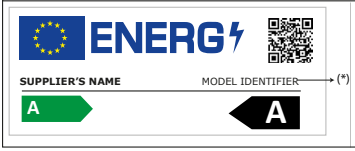

The model information as stored in the product data base can be reached by entering following website and searching for your model identifier (*) found on energy label.

https://eprel.ec.europa.eu/

1. Safety and environment instructions

This section provides the safety instructions necessary to prevent the risk of injury and material damage. Failure to observe these instructions will invalidate all types of product warranty.

Intended use

⚠	**WARNING:** Keep ventilation openings, in the appliance enclosure or in the built-instructure, clear of obstruction.
⚠	**WARNING:** Do not use mechanical devices or other means to accelerate the defrostingprocess, other than those recommended by the manufacturer.
⚠	**WARNING:** Do not damage the refrigerant circuit.
⚠	**WARNING:** Do not use electrical appliances inside the food storage compartments of the appliance, unless they are of the type recommended by the manufacturer.

1.1. General safety

- This appliance can be used by children aged from 8 years and above and persons with reduced physical,sensory or mental capabilities or lack of experience and knowledge if they have been given supervision or instruction concerning use of the appliance in a safe way and understand the hazards involved. Children shall not play with the appliance.
- In case of malfunction, unplug the device.
- After unplugging, wait at least 5 minutes before plugging in again.
- Unplug the product when not in use.
- Do not touch the plug with wet hands! Do not pull the cable to plug off, always hold the plug.
- Do not plug in the refrigerator if the socket is loose.
- Unplug the product during installation, maintenance, cleaning and repair.
- If the product will not be used for a while, unplug the product and remove any food inside.
- Do not use the product when the compartment with circuit cards located on the upper back part of the product (electrical card box cover) (1) is open.

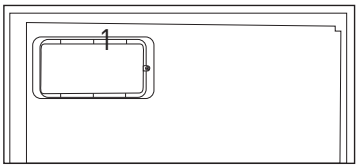

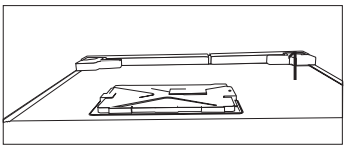

- Do not use steam or steamed cleaning materials for cleaning the refrigerator and melting the ice inside. Steam may contact the electrified areas and cause short circuit or electric shock!
- Do not wash the product by spraying or pouring water on it! Danger of electric shock!
- In case of malfunction, do not use the product, as it may cause electric shock. Contact the authorised service as soon as possible.
- Plug the product into an earthed socket. Earthing must be done by a qualified electrician.
- If the product has LED type lighting, contact the authorised service for replacing or in case of any problem.
- Do not touch frozen food with wet hands! It may adhere to your hands!
- Do not place liquids in bottles and cans into the freezer compartment. They may burst.
- Place liquids in upright position after tightly closing the lid.
- Do not spray flammable substances near the product, as it may burn or explode.
- Do not keep flammable materials and products with flammable gas (sprays, etc.) in the refrigerator.
- Do not place containers holding liquids on top of the product. Splashing water on an electrified part may cause electric shock and risk of fire.
- Exposing the product to rain, snow, sunlight and wind will cause electrical danger. When relocating the product, do not pull by holding the door handle. The handle may come off.
- Take care to avoid trapping any part of your hands or body in any of the moving parts inside the product.
- Do not step or lean on the door, drawers and similar parts of the refrigerator. This will cause the product to fall down and cause damage to the parts.
- Take care not to trap the power cable.

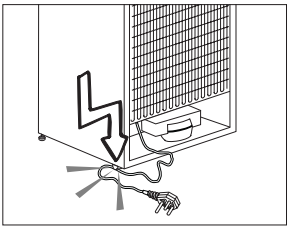

1.1.1 HC warning

If the product comprises a cooling system using R600a gas, take care to avoid damaging the cooling system and its pipe while using and moving the product. This gas is flammable. If the cooling system is damaged, keep the product away from sources of fire and ventilate the room immediately.

ⓘ	The label on the inner left side indicates the type of gas used in the product.

1.1.2 For models with water dispenser

- Pressure for cold water inlet shall be maximum 90 psi (6.2 bar). If your water pressure exceeds 80 psi (5.5 bar), use a pressure limiting valve in your mains system. If you do not know how to check your water pressure, ask for the help of a professional plumber.
- If there is a risk of water hammer effect in your installation. Consult a plumber.
- Do not install on the hot water inlet. Take precautions against of the risk of freezing of the hoses. Water temperature operating interval shall be 33°F (0.6°C) minimum and 100°F (38°C) maximum.
- Use drinking water only.

1.2. Intended use

- This product is designed for home use. It is not intended for commercial use.
- The product should be used to store food and beverages only.
- Do not keep sensitive products requiring controlled temperatures (vaccines, heat sensitive medication, medical supplies, etc.) in the refrigerator.
- The manufacturer assumes no responsibility for any damage due to misuse or mishandling.

1.3. Child safety

- Keep packaging materials out of children's reach.
- Do not allow the children to play with the product.
- If the product's door comprises a lock, break off the lock when eventually disposing of the product.

1.4. Compliance with WEEE Directive and Disposing of the Waste Product

This product complies with EU WEEE Directive (2012/19/EU). This product bears a classification symbol for waste electrical and electronic equipment (WEEE).

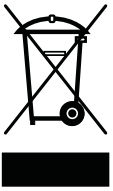

This product has been manufactured with high quality parts and materials which can be reused and are suitable for recycling. Do not dispose of the waste product with normal domestic and other wastes at the end of its service life. Take it to the collection center for the recycling of electrical and electronic equipment. Please consult your local authorities to learn about these collection centers.

1.5. Compliance with RoHS Directive

- This product complies with EU WEEE Directive (2011/65/EU). It does not contain harmful and prohibited materials specified in the Directive.

1.6. Package information

- Packaging materials of the product are manufactured from recyclable materials in accordance with our National Environment Regulations. Do not dispose of the packaging materials together with the domestic or other wastes. Take them to the packaging material collection points designated by the local authorities.

2. Your Refrigerator

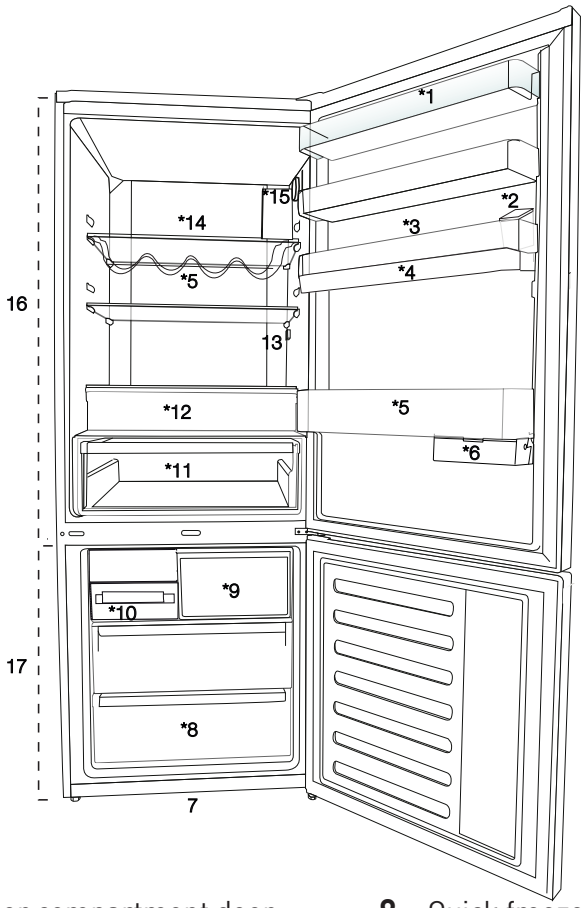

1. Cooler compartment door shelf
2. Water dispenser filling tank
3. Egg section
4. Water dispenser reservoir
5. Bottle shelf
6. Sliding storage containers
7. Adjustable legs
8. Deep freezer compartment
9. Quick freeze compartment
10. Ice cube tray & Ice bank
11. Vegetable bin
12. Zero degree compartment
13. Interior light
14. Cooler compartment glass shelf
15. Temperature adjustment button
16. Cooler compartment
17. Freezer compartment

*** optional:**Figures in this user manual are schematic and may not match the product exactly. If the subject parts are not included in the product you have purchased, then those parts are valid for other models.

3 Installation

3.1 Appropriate installation location

In order to prepare the product for use, refer the information in the user manual and ensure that electrical installation and water installation are appropriate. If not, call a qualified electrician and technician to have any necessary arrangements carried out.

⚠	**WARNING:** Manufacturer shall not be held liable for damages that may arise from procedures carried out by unauthorized persons.
⚠	**WARNING:** Product must not be plugged in during installation. Otherwise, there is the risk of death or serious injury!
⚠	**WARNING:** If the door clearance of the room where the product shall be place is so tight to prevent passing of the product, remove the door of the room and pass the product through the door by turning it to its side; Alternatively, carefully remove the product doors

- Place the product on an even floor surface to prevent jolts.
- Install the product at least 30 cm away from heat sources such as hobs, heater cores and stoves and at least 5 cm away from electrical ovens.
- Product must not be subjected to direct sun light and kept in humid places.
- Appropriate air ventilation must be provided around your product in order to achieve an efficient operation. If the product is to be placed in a recess in the wall, pay attention to leave at least 5 cm distance with the ceiling and side walls.
- Do not install the product in places where the temperature falls below -5°C.

- Your product requires adequate air circulation to function efficiently. If the product will be placed in an alcove, remember to leave at least 5 cm clearance between the product and the ceiling, rear wall and the side walls.
- If the product will be placed in an alcove, remember to leave at least 5 cm clearance between the product and the ceiling, rear wall and the side walls. Check if the rear wall clearance protection component is present at its location (if provided with the product). If the component is not available, or if it is lost or fallen, position the product so that at least 5 cm clearance shall be left between the rear surface of the product and the wall of the room. The clearance at the rear is important for efficient operation of the product.

3.2 Installing the plastic wedges

Plastic wedges supplied with the product are used to create the distance for the air circulation between the product and the rear wall.

1. To install the wedges, remove the screws on the product and use the screws supplied together with the wedges.
2. Insert the 2 plastic wedges onto the rear ventilation cover as illustrated in the figure.

3.3 Adjusting the feet

If the product stands unbalanced after installation, adjust the feet on the front by rotating them to the right or left.

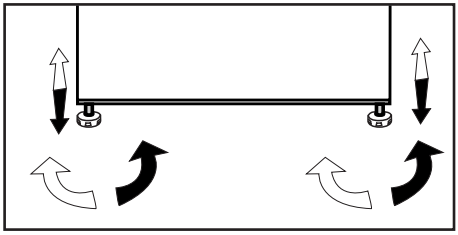

3.4 Electrical connection

⚠	**WARNING:** Do not make connections via extension cables or multi-plugs.
⚠	**WARNING:** Damaged power cable must be replaced by the Authorized Service Agent.
ⓘ	If two coolers are to be installed side by side, there should be at least 4 cm distance between them.

- Our company shall not be liable for any damages that will arise when the product is used without grounding and electrical connection in accordance with the national regulations.
- Power cable plug must be within easy reach after installation.
- Do not extension cords or cordless multiple outlets between your product and the wall outlet.

ⓘ	Hot Surface Warning! Side walls of your product is equipped with refrigerant pipes to improve the cooling system. Refrigerant with high temperatures may flow through these areas, resulting in hot surfaces on the side walls. This is normal and does not need any servicing. Please pay attention while touching these areas.

3.5 Reversing the doors

Proceed in numerical order .

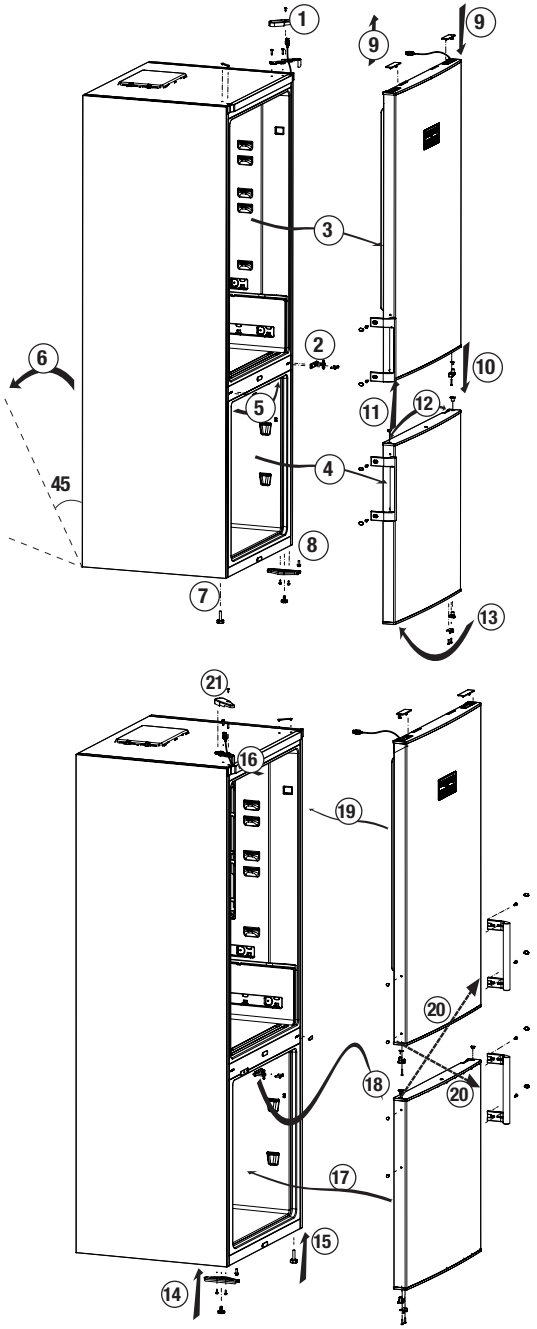

3.6 Reversing the doors

Proceed in numerical order .

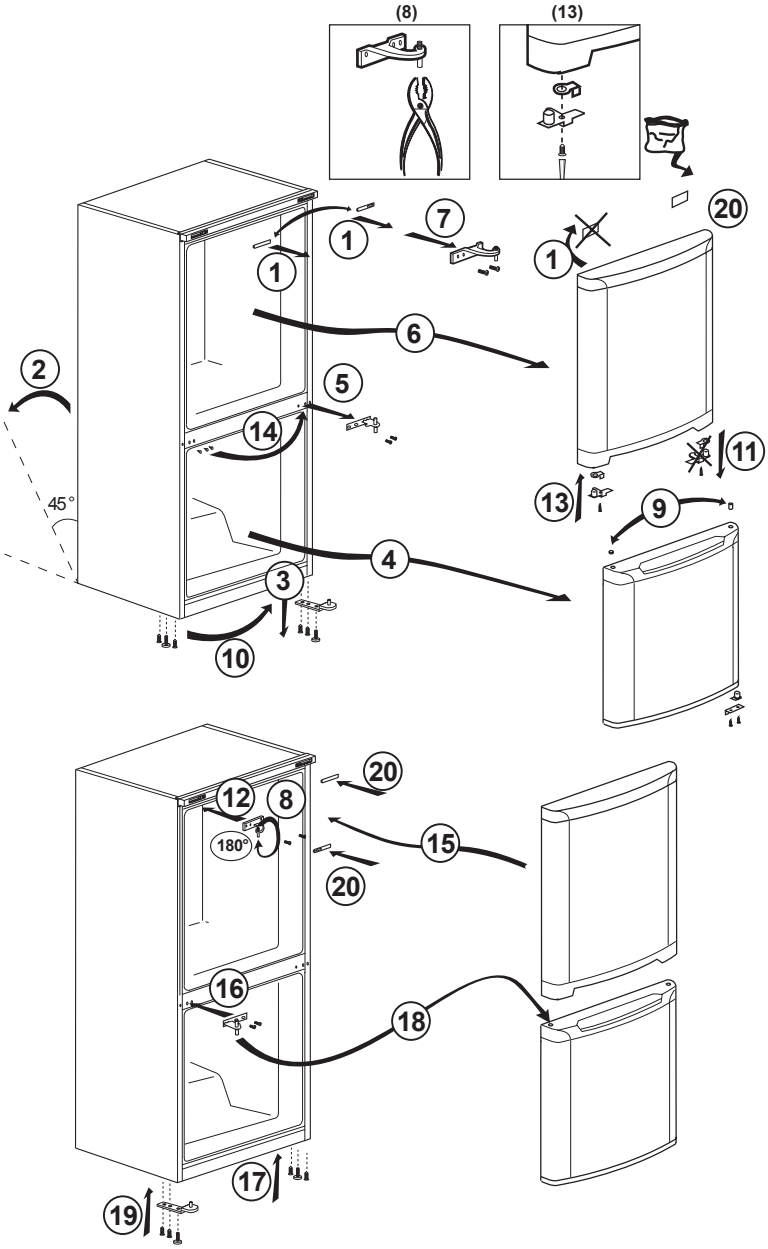

4 Preparation

4.1 Things to be done for energy saving

⚠	Connecting the product to electronic energy-saving systems is harmful, as it may damage the product.

- For a freestanding appliance; 'this refrigerating appliance is not intended to be used as a built-in appliance.
- Do not keep the refrigerator doors open for long periods.
- Do not place hot food or beverages into the refrigerator.
- Do not overfill the refrigerator; blocking the internal air flow will reduce cooling capacity.
- In order to store the maximum amount of food into the cooler compartment of your refrigerator, you should take out the upper drawers and place it onto the glass rack. The declared energy consumption of your refrigerator was determined by taking out the cooler, ice tray and upper drawers in a way that will enable maximum storage. Using the below drawer when storing is strongly recommended. Energy saving function should be activated for best energy consumption.
- You should not block the airflow by putting food in front of the cooler fan. A space of minimum 3cm must be left in front of the protective fan wire when placing food.
- Depending on the product's features; defrosting frozen foods in the cooler compartment will ensure energy saving and preserve food quality.
- Food should be stored using the drawers in the cooler compartment in order to ensure energy saving and protect food in better conditions.
- Food packages should not be in direct contact with the heat sensor located in the cooler compartment. If they are in contact with the sensor, energy consumption of the appliance might increase.
- Make sure the foods are not in contact with the cooler compartment temperature sensor described below.

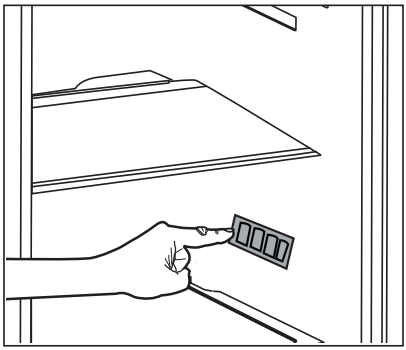

4.2 Initial use

Before using your refrigerator, make sure the necessary preparations are made in line with the instructions in “Safety and environment instructions” and “Installation” sections.

- Keep the product running with no food inside for 6 and do not open the door, unless absolutely necessary.

ⓘ	A sound will be heard when the compressor is engaged. It is normal to hear sound even when the compressor is inactive, due to the compressed liquids and gasses in the cooling system.
ⓘ	Front edges of the product might heat up. This is normal. These areas are designed to warm up in order to prevent condensation.
ⓘ	In some models indicator panel turns off automatically 5 minutes after the door closes. It will be reactivated when the door is open or any button is pressed.

- Since hot and humid air will not directly penetrate into your product when the doors are not opened, your product will optimize itself in conditions sufficient to protect your food. Functions and components such as compressor, fan, heater, defrost, lighting, display and so on will operate according to the needs to consume minimum energy under these circumstances.

5 . Using your refrigerator

5.1 Indicator panel

Indicator panel allows you to set the temperature and control the other functions related to the product without opening the door of the product. Just press the inscriptions on relevant buttons for function settings.

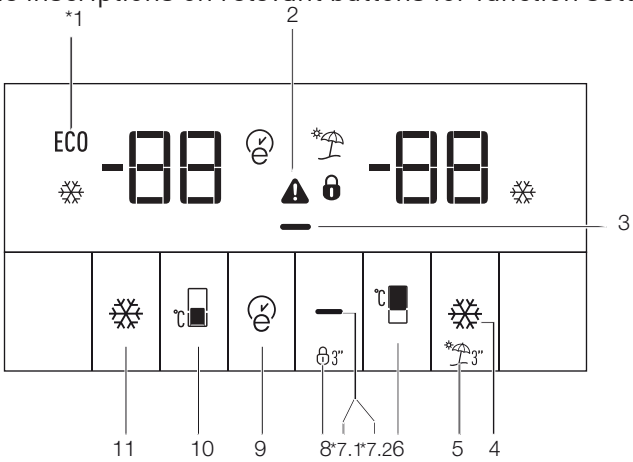

1. Economy
This symbol is illuminated when the freezer compartment is set to -18°C'ye as the most economical setting value (ECO). Economy indicator is turned off when quick cooling or quick freeze functions are selected.

2.Power Failure / High temperature / Error status indicator
This indicator (⚠) illuminates in case of power failure, high temperature and error warnings. When the temperature of the freezer compartment is heated up to a critical level for the frozen food, the maximum value reached by the freezer compartment temperature flashes on the digital indicator.
Check the food in the freezer compartment.
This is not a malfunction. The warning may be deleted by pressing any button or on high temperature alarm off button. (Cancelling by pressing any button is not applicable for every model.)
This indicator (▬) illuminated when a sensor failure occurs, too. When this indicator is illuminated, "E" and figures such as "1,2,3..."

May not be available in all models

ⓘ	Figures in this user manual are schematic and may not match the product exactly. If the subject parts are not included in the product you have purchased, then those parts are valid for other models.

are displayed alternatively on the temperature indicator. These figures on the indicator inform the service personnel about the error.

3. Energy saving function (display off)

If the product doors are kept closed for a long time energy saving function is automatically activated and energy saving symbol is illuminated.When energy saving function is activated, all symbols on the display other than energy saving symbol will turn off. When the Energy Saving function is activated, if any button is pressed or the door is opened, energy saving function will be canceled and the symbols on display will return to normal.

4. Quick cool

Quick cooling indicator ( ) is illuminated when quick cooling function is activated and fridge compartment temperature indicator value is displayed as 1. To cancel this function press Quick cooling button again. Quick cooling indicator will turn off and refrigerator will return to its normal settings. Quick cooling function is canceled automatically in 1 hour if you do not cancel it before. If you want to cool large amounts of fresh food, press the Quick cooling button before putting the food into the fridge compartment.

5. Vacation function

In order to activate vacation function, press the button no. (5) ( ) for 3 seconds, and the vacation mode indicator activates. When the vacation function is activated, "- -" is displayed on the fridge compartment temperature indicator and no active cooling is performed on the fridge compartment. It is not suitable to keep the food in the fridge compartment when this function is activated. Other compartments shall be continued to be cooled as per their set temperature.To cancel this function press **Vacation** function button again.

6. Fridge compartment temperature setting

When the button no. (6) is pressed, you may set the temperature of the fridge compartment to 8,7,6,5,4,3,2 and 1 respectively ( ).

7.1. Energy saving function (display off):

Energy saving symbol ( ) is illuminated and Energy saving function is activated when you press this button ( ). When energy saving function is activated, all symbols on the display other than energy saving symbol will turn off. When the Energy Saving function is activated, if any button is pressed or the door is opened, energy saving function will be canceled and the symbols on display will return to normal. Energy saving symbol is turned off and energy saving function is deactivated when you press this button ( ) again.

7.2.Alarm off warning:

In case of power failure/high temperature warning, you may delete the warning ( ) by pressing any button on the indicator or high temperature alarm off button for 1 second after checking the food inside the freezer compartment. Note: Cancelling by pressing any button is not applicable for every model.

8. Key lock
Press key lock button ( ) simultaneously for 3 seconds. Key lock symbol ( ) will light up and key lock mode will be activated. Buttons will not function if the Key lock mode is active. Press key lock button simultaneously for 3 seconds again. Key lock symbol will turn off and the key lock mode will be exited.

Press the **key lock** button if you want to prevent changing of the temperature setting of the refrigerator ( ).

9. Eco fuzzy
Press and hold eco fuzzy button for 1 seconds to activate eco fuzzy function. Refrigerator will start operating in the most economic mode at least 6 hours later and the economic usage indicator will turn on when the function is active ( ). Press and hold eco fuzzy function button for 3 seconds to deactivate eco fuzzy function.
This indicator is illuminated after 6 hours when eco fuzzy is activated.

10. Freezer compartment temperature setting
Temperature setting for freezer compartment is performed here. When button no. 9 is pressed, you may set the temperature of the freezer compartment to -18, -19, -20, -21, -22, -23 and -24 respectively.

11. Fast freeze
Press button no. (11) for fast freeze operation, quick freeze indicator
( ) shall be activated.
Quick freeze indicator is illuminated when quick freeze function is activated and fridge compartment temperature indicator is displayed as -27. To cancel this function press quick freeze button ( ) again.
Quick freeze indicator will turn off and refrigerator will return to its normal settings. Quick freeze function is canceled automatically in 24 hour if you do not cancel it before. If you want to freeze large amounts of fresh food, press the quick freeze button before putting the food into the freezer compartment.

5.2 Ice bucket

(This feature is optional)

- Take the ice bucket from the freezer compartment.
- Fill the ice bucket with water.
- Place the ice bucket into the freezer compartment.
- The ice will be ready after approximately two hours. Take the ice bucket from the freezer compartment and bend in sightly over the holder that you are going to serve. Ice will easily pour into the serving holder.

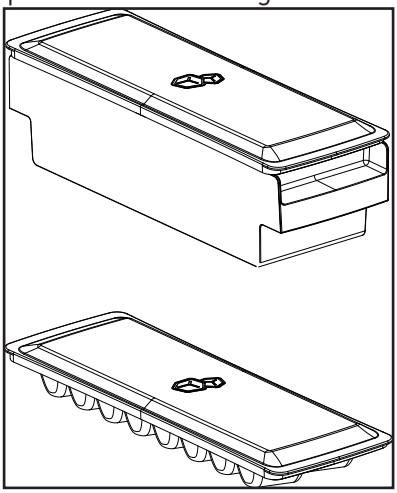

5.3 Egg holder

You can put the eggholder on the door or body rack of your choice. If you decide to put it on the body rack, it is recommended to prefer the shelves below as they are colder.

⚠	Do not put the eggholder into the freezer compartment.

5.4 Fan

Fan was designed to distribute circulate the cold air inside your refrigerator homogeneously. Operating time of the fan might vary depending the features of your product.

While in some products fan only operates with compressor, in others control system determines the operating time based on the need for cooling.

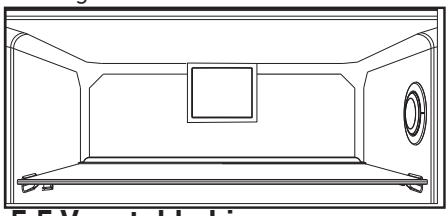

5.5 Vegetable bin

(This feature is optional)

- Product's vegetable bin is designed to keep vegetables fresh by preserving humidity. For this purpose, the overall cold air circulation is intensified in the vegetable bin.

5.6 Zero degree compartment

(This feature is optional)

Use this compartment to keep delicatessen at lower temperatures or meat products for immediate consumption.
Zero degree compartment is the coolest place where foods such as dairy products, meat, fish and chicken can be stored in ideal storage conditions. Vegetables and/or fruits should not be stored in this compartment.

5.7 Using the second crisper of the product



Figure 1.

As shown in the figure, there are 2 stoppers in the second crisper of K70560 model product.



Figure 2.

The second crisper looks like Figure 2 when closed.



Figure 3.

With the door is open 90°, pull the second crisper up to the first stopper as shown in Figure 3.

In the case that the drawer is more open, first of all, open the door by at least 135° degrees. After that, as shown in Figure 4, lift the second crisper for about 5 mm so that it is freed from the first stopper.



Figure 4.

After lifting, pull the second drawer up to the second stopper as shown in



Figure 5.

5.8 Moving door rack

(This feature is optional)

Moving door rack can be fixed in 3 different positions.

In order to move the rack, push the buttons on the side evenly. Rack will be movable.

Move the rack up or down.

When the rack is in the position that you want, release the buttons. Rack will be fixed again in the position where you have released the buttons.

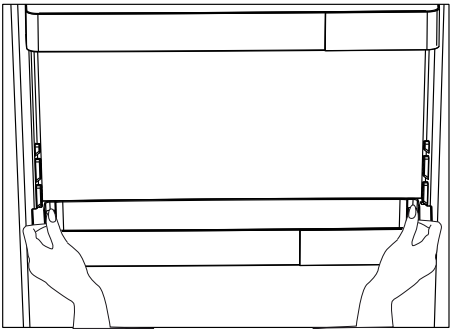

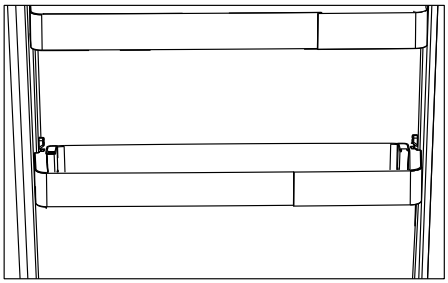

5.9 Sliding storage box

(This feature is optional)

This accessory has been designed to increase the usage volume of the door racks.

Thanks to its ability to move sideways, it enables you to easily place long bottle, jar or boxes that you put in the bottle rack below.

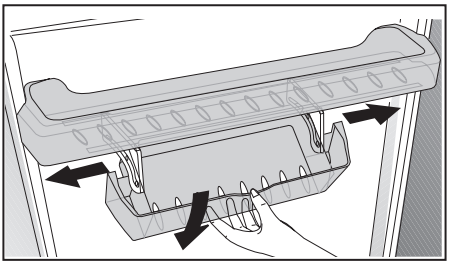

5.10 Moisture controlled vegetable bin

(This feature is optional)

With moisture control feature, moisture rates of vegetables and fruits are kept under control and ensures a longer freshness period for foods.

It is recommended to store leafed vegetables such as lettuce and spinach and similar vegetables prone to moisture loss not on their roots but in horizontal position into the vegetable bin as much as possible.

When placing the vegetables, place heavy and hard vegetables at the bottom and light and soft ones on the top, taking into account the specific weights of vegetables.

Do not leave vegetables in the vegetable bin in plastic bags.

Leaving them in plastic bags causes vegetables to rot in a short time. In situations where contact with other vegetables is not preferred, use packaging materials such as paper that has a certain porosity in terms of hygiene.

Do not put fruits that have a high ethylene gas production such as pear, apricot, peach and particularly apple in the same vegetable bin with other vegetables and fruits. The ethylene gas coming out of these fruits might cause other vegetables and fruits to mature faster and rot in a shorter period of time.

5.11 Automatic ice machine

(This feature is optional)

Automatic ice machine enables you to easily make ice in your refrigerator. In order to obtain ice from the ice machine, take out the water tank in the cooler compartment, fill it with water and fix it back.

First ice will be ready in about 2 hours in the ice machine drawer in the cooler compartment.

After placing the full water tank, you can obtain about 60-70 cubes of ice until it is fully empty.

If the water in the tank has waited for 2-3 weeks, it should be changed.

In products with automatic ice machine, you might hear a sound when pouring the ice. This sound is normal and is not a sign of failure.

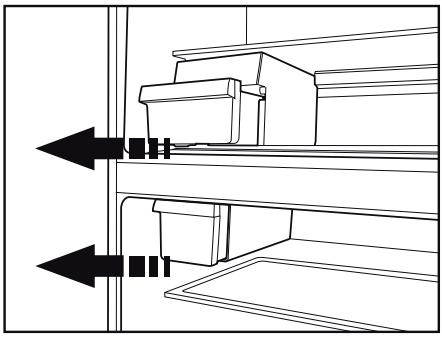

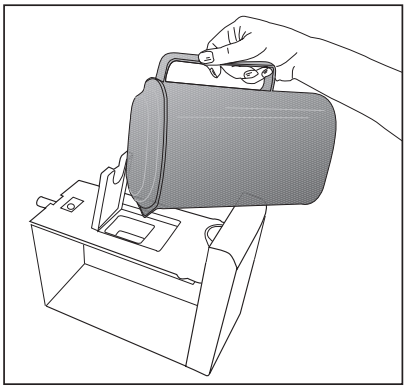

5.12 Icematic and ice storage container

***optional**

Using the Icematic

Fill the Icematic with water and place it into its seat. Your ice will be ready approximately in two hours. Do not remove the Icematic from its seating to take ice.

Turn the knobs on the ice reservoirs clockwise by 90 degrees.

Ice cubes in the reservoirs will fall down into the ice storage container below.

You may take out the ice storage container and serve the ice cubes.

If you wish, you may keep the ice cubes in the ice storage container.

Ice storage container

Ice storage container is only intended for accumulating the ice cubes. Do not put water in it. Otherwise, it will break.

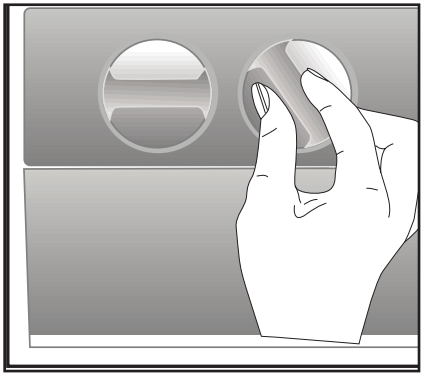

5.13 Using the water dispenser

***optional**

ⓘ	It is normal for the first few glasses of water taken from the dispenser to be warm.
ⓘ	If the water dispenser is not used for a long period of time, dispose of first few glasses of water to obtain fresh water.

1. Push in the lever of the water dispenser with your glass. If you are using a soft plastic cup, pushing the lever with your hand will be easier.
2. After filling the cup up to the level you want, release the lever.

ⓘ	Please note, how much water flows from the dispenser depends on how far you depress the lever. As the level of water in your cup / glass rises, gently reduce the amount of pressure on the lever to avoid overflow. If you slightly press the arm, the water will drip; this is quite normal and not a failure.

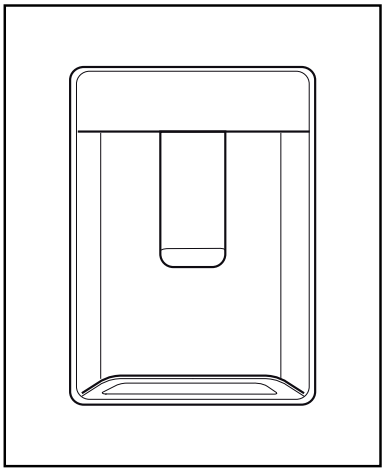

5.14 Filling the water dispenser's tank

Water tank filling reservoir is located inside the door rack.

1. Open the cover of the tank.
2. Fill the tank with fresh drinking water.
3. Close the cover.

ⓘ	Do not fill the water tank with any other liquid except for water such as fruit juices, carbonated beverages or alcoholic drinks which are not suitable to use in the water dispenser. Water dispenser will be irreparably damaged if these kinds of liquids are used. Warranty does not cover such usages. Some chemical substances and additives contained in these kinds of drinks/liquids may damage the water tank.

ⓘ	Use clean drinking water only.

ⓘ	Capacity of the water tank is 3 litres; do not overfill.

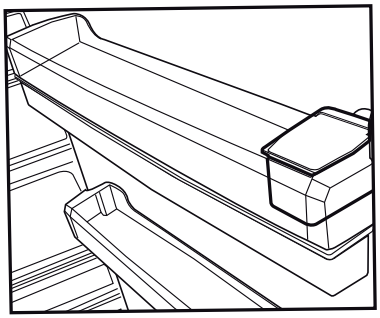

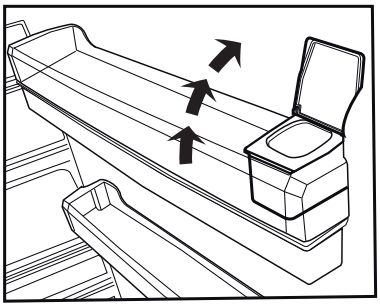

5.15 Cleaning the water tank

1. Remove the water filling reservoir inside the door rack.
2. Remove the door rack by holding from both sides.
3. Grab the water tank from both sides and remove it with an angle of 45°C.

4. Remove the cover of the water tank and clean the tank.

ⓘ	Components of the water tank and water dispenser should not be washed in dishwasher.

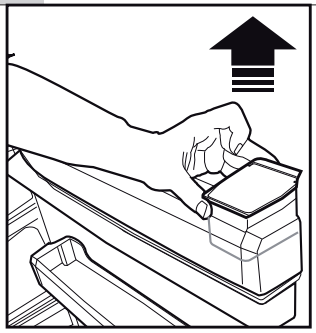

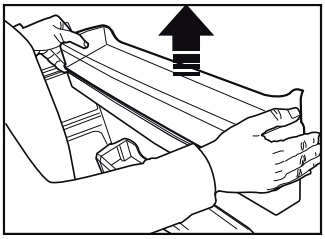

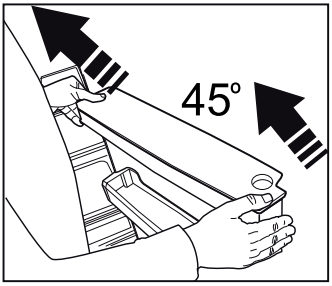

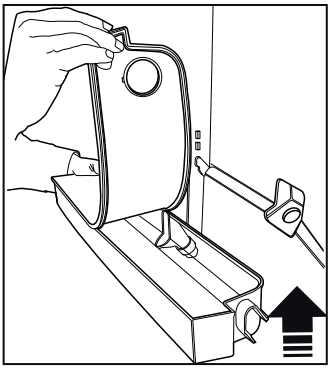

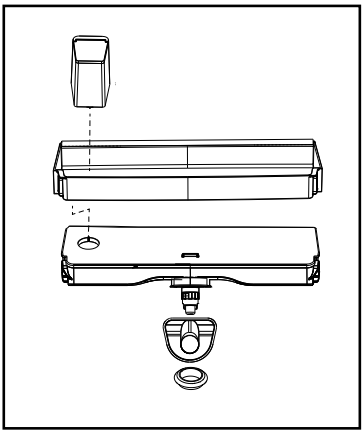

5.16 Drip tray

Water that dripped while using the water dispenser accumulates in the spillage tray.

Remove the plastic filter as shown in the figure.

With a clean and dry cloth, remove the water that has accumulated.

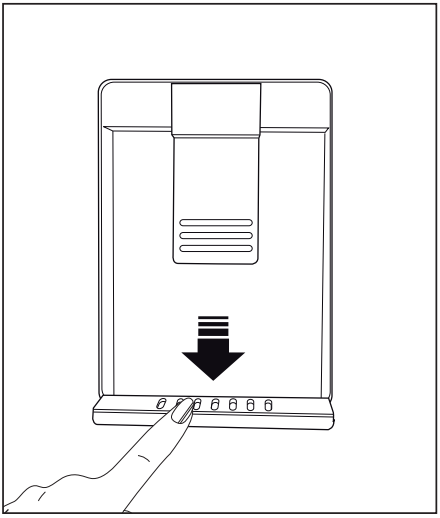

5.17 HerbBox/HerbFresh

(This feature is optional)

Remove the film container from HerbBox/HerbFresh+

Take the film out of the bag and put it into the film container as shown in the image.

Seal the container again and replace it into HerbBox/HerbFresh+ unit.

HerbBox-HerbFresh+ sections are especially ideal for storage of various herbs that are supposed to be kept in delicate conditions. You can store your unbagged herbs (parsley, dill, etc.) in this section horizontally and keep them fresh for a much longer period.

The film shall be replaced in every six months.

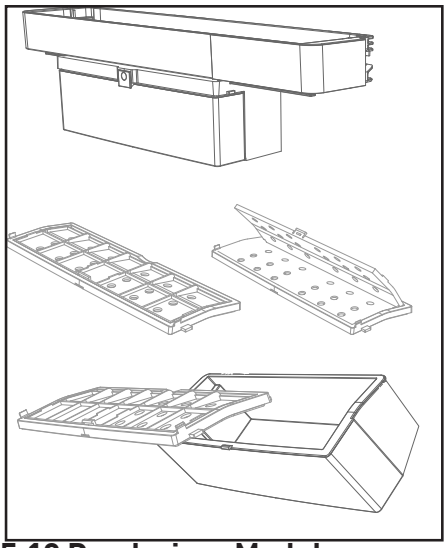

5.18 Deodoriser Module

(OdourFresh +)

(This feature is optional)

The deodoriser module quickly eliminates the bad smells in your refrigerator before they permeate the surfaces. Thanks to this module, which is placed on the ceiling of the fresh food compartment, the bad odours dissolve while the air is actively being passed on the odour filter, then the air that has been cleaned by the filter is re-emitted to the fresh food compartment. This way, the unwanted odours that may emerge during the storage of foods in the refrigerator are eliminated before they permeate the surfaces.

This is achieved thanks to the fan, LED and the odour filter integrated into the module. In daily use, the deodorising module will turn on automatically on a periodic basis. To maintain efficient performance, it is recommended to have the filter in the deodorising module by the authorised service provider every 5 years. Due to the fan integrated into the module, the noise you will hear during operation is normal. If you open the door of the fresh food compartment while the module is active, the fan will pause temporarily and resume where it has left off after some time the door is closed again. In case of power failure, the deodoriser module will resume where it has left off in the total operation duration once the power is back.

Info: It is recommended to store aromatic foods (such as cheese, olives and delicatessen foods) in their packaging and sealed to avoid bad odours that may result when smells of various foods get mixed. Besides, it is recommended to take spoiled foods out of the refrigerator quickly to prevent the other foods from getting spoiled and avoid bad odours.

5.19 Freezing fresh food

- In order to preserve the quality of the food, it shall be frozen as quickly as possible when it is placed in the freezer compartment, use the fast freezing feature for this purpose.
- You may store the food longer in freezer compartment when you freeze them while they are fresh.
- Pack the food to be frozen and close the packing so that it would not allow entrance of air.
- Ensure that you pack your food before putting them in the freezer. Use freezer containers, foils and moisture-proof papers, plastic bags and other packing materials instead of traditional packing papers.
- Label each pack of food by adding the date before freezing. You may distinguish the freshness of each food pack in this way when you open your freezer each time. Store the food frozen before in the front side of compartment to ensure that they are used first.



The freezer compartment defrosts automatically.

- Frozen food must be used immediately after they are thawed and they should not be re-frozen.
- Do not freeze too large quantities of food at one time.

Freezer Compartment Setting	Fridge compartment Setting	Remarks
-18°C	4°C	This is the normal recommended setting.
-20,-22 or -24°C	4°C	These settings are recommended when the ambient temperature exceeds 30°C.
Quick Freeze	4°C	Use when you wish to freeze your food in a short time. Your product will return to its previous mode when the process is over.
-18°C or colder	2°C	Use these settings if you think that your fridge compartment is not cold enough because of the hot ambient conditions or frequent opening and closing of the door.

5.20 Recommendations for preserving the frozen food

Compartment shall be set to -18°C at least.

1. Put packages in the freezer as quickly as possible after purchase without allowing the to thaw.
2. Check whether the "Use By" and "Best Before" dates on the packaging are expired or not before freezing it.
3. Ensure that the package of the food is not damaged.

5.21 Deep-freeze information

According to IEC 62552 standards, the product shall freeze at least 4.5 kg of food at 25°C ambient temperature to -18°C or lower within 24 hours for every 100-litres of freezer volume.
It is possible to preserve the food for a long time only at -18°C or lower temperatures.
You can keep the freshness of food for many months (at -18°C or lower temperatures in the deep freeze).

Foods to be frozen should not be allowed to come in contact with the previously frozen items to prevent them from getting thawed partially. Boil the vegetables and drain their water in order to store vegetables for a longer time as frozen. After draining their water, put them in air-proof packages and place them inside the freezer. Food such as bananas, tomatoes, lettuce, celery, boiled eggs, potatoes are not suitable for freezing. When these foods are frozen, only their nutritional value and taste shall be affected negatively. They shall not be spoiled so that they would create a risk for human health.

5.22 Placing the food

Freezer compartment shelves	Various frozen food such as meat, fish, ice cream, vegetables and etc.
Refrigerator compartment shelves	Food in pans, covered plates and closed containers, eggs (in closed container)
Door shelves of fridge compartment	Small and packaged food or beverage
Crisper	Vegetables and fruits
Fresh zone compartment	Delicatessen (breakfast food, meat products that shall be consumed in a short time)

5.23 Door open warning

(This feature is optional)

Door open warning is given to user both visually and acoustically. If the warning continues for 10 minutes, interior lights will be turned off.

5.24 Illumination lamp

LED lamps are used as illumination lamps. Contact authorized service in case of any problem with this type of light. The lamp(s) used in this appliance is not suitable for household room illumination. The intended purpose of this lamp is to assist the user to place foodstuffs in the refrigerator/ freezer in a safe and comfortable way.

5.25 Vitamin Care Technology

***May not be available in all models**

For the blue light,
Fruits and vegetables stored in the crispers that are illuminated with a blue light continue their photosynthesis by means of the wavelength effect of blue light and thus preserve their vitamin C content longer.

For VitaminCare+,

Fruits and vegetables stored in crispers illuminated with the VitaminCare+ technology preserve their vitamin A and C content for a longer time thanks to the blue, green, red lights and dark cycles, which simulate a day cycle.

With this technology, you can keep your fruits & vegetables tasty & healthy longer which helps you to minimize food waste at home.

If you open the door of the refrigerator during the dark period of the VitaminCare+ technology, the refrigerator will automatically detect this and enable the blue, green or red light to illuminate the crisper for your convenience. After you have closed the door of the refrigerator, the dark period will continue, representing the night time in a day cycle.

6. Maintenance and cleaning

Service life of the product extends and frequently faced problems decrease if cleaned at regular intervals.

WARNING: Unplug the product before cleaning it.

- Never use gasoline, benzene or similar substances for cleaning purposes.
- Never use any sharp and abrasive tools, soap, household cleaners, detergent and wax polish for cleaning.
- Dissolve one teaspoon of carbonate in half litre of water. Soak a cloth with the solution and wrung it thoroughly. Wipe the interior of the refrigerator with this cloth and the dry thoroughly.
- Make sure that no water enters the lamp housing and other electrical items.
- If you will not use the refrigerator for a long period of time, unplug it, remove all food inside, clean it and leave the door ajar.
- Check regularly that the door gaskets are clean. If not, clean them.
- To remove door and body shelves, remove all of its contents.
- Remove the door shelves by pulling them up. After cleaning, slide them from top to bottom to install.
- Never use cleaning agents or water that contain chlorine to clean the outer surfaces and chromium coated parts of the product. Chlorine causes corrosion on such metal surfaces
- Do not use sharp, abrasive tools, soap, household cleaning agents, detergents, kerosene, fuel oil, varnish etc. to prevent removal and deformation of the prints on the plastic part. Use lukewarm water and a soft cloth for cleaning and then wipe it dry.

6.1 Avoiding bad odours

Materials that may cause odour are not used in the production of our refrigerators. However, due to inappropriate food preserving conditions and not cleaning the inner surface of the refrigerator as required can bring forth the problem of odour. Pay attention to following to avoid this problem:

- Keeping the refrigerator clean is important. Food residuals, stains, etc. can cause odour. Therefore, clean the refrigerator with carbonate dissolved in water every 15 days.Never use detergents or soap.
- Keep the food in closed containers.Microorganisms spreading out from uncovered containers can cause unpleasant odours.
- Never keep the food that have expired best before dates and spoiled in the refrigerator.

6.2 Protecting the plastic surfaces

Do not put liquid oils or oil-cooked meals in your refrigerator

in unsealed containers as they damage the plastic surfaces of the refrigerator. If oil is spilled or smeared onto the plastic surfaces, clean and rinse the relevant part of the surface at once with warm water.

7. Troubleshooting

Check this list before contacting the service. Doing so will save you time and money. This list includes frequent complaints that are not related to faulty workmanship or materials. Certain features mentioned herein may not apply to your product.

The refrigerator is not working.

- The power plug is not fully settled. >>> Plug it in to settle completely into the socket.
- The fuse connected to the socket powering the product or the main fuse is blown. >>> Check the fuses.

Condensation on the side wall of the cooler compartment (MULTI ZONE, COOL, CONTROL and FLEXI ZONE).

- The door is opened too frequently >>> Take care not to open the product's door too frequently.
- The environment is too humid. >>> Do not install the product in humid environments.
- Foods containing liquids are kept in unsealed holders. >>> Keep the foods containing liquids in sealed holders.
- The product's door is left open. >>> Do not keep the product's door open for long periods.
- The thermostat is set to too low temperature. >>> Set the thermostat to appropriate temperature.

Compressor is not working.

- In case of sudden power failure or pulling the power plug off and putting back on, the gas pressure in the product's cooling system is not balanced, which triggers the compressor thermic safeguard. The product will restart after approximately 6 minutes. If the product does not restart after this period, contact the service.
- Defrosting is active. >>> This is normal for a fully-automatic defrosting product. The defrosting is carried out periodically.
- The product is not plugged in. >>> Make sure the power cord is plugged in.
- The temperature setting is incorrect. >>> Select the appropriate temperature setting.
- The power is out. >>> The product will continue to operate normally once the power is restored.

The refrigerator's operating noise is increasing while in use.

- The product's operating performance may vary depending on the ambient temperature variations. This is normal and not a malfunction.

The refrigerator runs too often or for too long.

- The new product may be larger than the previous one. Larger products will run for longer periods.
- The room temperature may be high. >>> The product will normally run for long periods in higher room temperature.
- The product may have been recently plugged in or a new food item is placed inside. >>> The product will take longer to reach the set temperature when

recently plugged in or a new food item is placed inside. This is normal.
- Large quantities of hot food may have been recently placed into the product. >>> Do not place hot food into the product.
- The doors were opened frequently or kept open for long periods. >>> The warm air moving inside will cause the product to run longer. Do not open the doors too frequently.
- The freezer or cooler door may be ajar. >>> Check that the doors are fully closed.
- The product may be set to temperature too low. >>> Set the temperature to a higher degree and wait for the product to reach the adjusted temperature.
- The cooler or freezer door washer may be dirty, worn out, broken or not properly settled. >>> Clean or replace the washer. Damaged / torn door washer will cause the product to run for longer periods to preserve the current temperature.

The freezer temperature is very low, but the cooler temperature is adequate.
- The freezer compartment temperature is set to a very low degree. >>> Set the freezer compartment temperature to a higher degree and check again.

The cooler temperature is very low, but the freezer temperature is adequate.
- The cooler compartment temperature is set to a very low degree. >>> Set the freezer compartment temperature to a higher degree and check again.

The food items kept in cooler compartment drawers are frozen.
- The cooler compartment temperature is set to a very low degree. >>> Set the freezer compartment temperature to a higher degree and check again.

The temperature in the cooler or the freezer is too high.
- The cooler compartment temperature is set to a very high degree. >>> Temperature setting of the cooler compartment has an effect on the temperature in the freezer compartment. Wait until the temperature of relevant parts reach the sufficient level by changing the temperature of cooler or freezer compartments.
- The doors were opened frequently or kept open for long periods. >>> Do not open the doors too frequently.
- The door may be ajar. >>> Fully close the door.
- The product may have been recently plugged in or a new food item is placed inside. >>> This is normal. The product will take longer to reach the set temperature when recently plugged in or a new food item is placed inside.
- Large quantities of hot food may have been recently placed into the product. >>> Do not place hot food into the product.

Shaking or noise.
- The ground is not level or durable. >>> If the product is shaking when moved slowly, adjust the stands to balance the product. Also make sure the ground is sufficiently durable to bear the product.

- Any items placed on the product may cause noise. >>> Remove any items placed on the product.

The product is making noise of liquid flowing, spraying etc.

- The product's operating principles involve liquid and gas flows. >>> This is normal and not a malfunction.

There is sound of wind blowing coming from the product.

- The product uses a fan for the cooling process. This is normal and not a malfunction.

There is condensation on the product's internal walls.

- Hot or humid weather will increase icing and condensation. This is normal and not a malfunction.
- The doors were opened frequently or kept open for long periods. >>> Do not open the doors too frequently; if open, close the door.
- The door may be ajar. >>> Fully close the door.

There is condensation on the product's exterior or between the doors.

- The ambient weather may be humid, this is quite normal in humid weather. >>> The condensation will dissipate when the humidity is reduced.

The interior smells bad.

- The product is not cleaned regularly. >>> Clean the interior regularly using sponge, warm water and carbonated water.
- Certain holders and packaging materials may cause odour. >>> Use holders and packaging materials without free of odour.
- The foods were placed in unsealed holders. >>> Keep the foods in sealed holders. Micro-organisms may spread out of unsealed food items and cause malodour. Remove any expired or spoilt foods from the product.

The door is not closing.

- Food packages may be blocking the door. >>> Relocate any items blocking the doors.
- The product is not standing in full upright position on the ground. >>> Adjust the stands to balance the product.
- The ground is not level or durable. >>> Make sure the ground is level and sufficiently durable to bear the product.

The vegetable bin is jammed.

- The food items may be in contact with the upper section of the drawer. >>> Reorganize the food items in the drawer.

If The Surface Of The Product Is Hot.

- High temperatures may be observed between the two doors, on the side panels and at the rear grill while the product is operating. This is normal and does not require service maintenance!Be careful when touching these areas.

⚠ **WARNING:**

If the problem persists after following the instructions in this section, contact your vendor or an Authorised Service. Do not try to repair the product.

GRUNDIG UK AND IRELAND STANDARD MANUFACTURER GUARANTEE TERMS AND CONDITIONS

Your new Grundig product is guaranteed against faulty materials, defective components or manufacturing defects.

The standard guarantee starts from the date of original purchase of the product, and lasts for a period of thirty six (36) months unless Beko plc (the "Manufacturer") agrees to extend the guarantee for the product in writing.

If you have registered the product within 90 days of purchase by completing the online registration form, then the standard 36 month guarantee will be extended to 60 months, under the same terms and conditions as detailed below

If you have any questions about the guarantee on your product (including how long it is valid), please contact your retailer or our contact centre on **0333 207 9920** (UK and Northern Ireland) or **01 691 0203** (Republic of Ireland)

This guarantee does not in any way diminish or affect your statutory rights in connection with the product. This guarantee is in addition to your statutory rights as a consumer. If you have any questions about these rights, please contact the retailer from which you purchased the product. In certain circumstances, it is possible that your statutory rights may offer additional or higher levels of protection than those offered under the terms of this guarantee.

What is covered by this guarantee?

- Repairs to the product required as a result of faulty materials, defective components or manufacturing defects.
- Functional replacement parts to repair a product.
- The costs of a Grundig Approved Engineer to carry out the repair.

What is not covered?

- Transit and delivery damage.
- Cabinet or appearance parts, including but not limited to control knobs, flaps and handles.
- Accessories and/or consumable items including but not limited to ice trays, scrapers, cutlery baskets, filters and light bulbs.
- Repairs necessary as a direct or indirect result of:
  - -Accidental damage, misuse or abuse of a product.
  - -An attempted repair of a product by anyone other than a Grundig Approved Engineer (the "Engineer").

-Installation or use of a product where such installation or use fails to meet the requirements contained in this guarantee or the User Instructions Booklet.

- Repairs to a product operated at any time on commercial or non-residential household premises (unless we have previously agreed to the installation environment).

This guarantee is limited to the cost of repairing the product. To the extent permitted by law, the Manufacturer does not accept and will not be held liable for any financial loss incurred in connection with the failure of any product to operate in accordance with the expected standards. Such financial loss includes but is not limited to loss arising from:

- Time taken off work.
- Damaged food, clothing or other items.
- Meals taken at restaurants or from takeaways.
- General compensation for inconvenience.

Important Notes

1. Your product is designed and built for domestic household use only.
2. The guarantee will automatically be void if the product is installed or is used in commercial or non-residential domestic household premises, unless we have previously agreed to the installation environment.
3. The product must be correctly installed, located and operated in accordance with the instructions contained in the User Instructions Booklet provided with your product.
4. Professional installation by a qualified Electrical Domestic Appliance Installer is recommended for all Washing Machines, Dishwashers and Electric Cookers (as incorrect installation may result in you having to pay for the cost of repairing the product).
5. Gas Cookers must be professionally installed by a Gas Safe (or Gas Networks Ireland for Republic of Ireland) registered gas installer.
6. This guarantee is given in respect of products purchased and used within the United Kingdom and the Republic of Ireland.
7. This guarantee is effective from the initial date of purchase of a new product from an authorised retailer and will be void if the product is resold.
8. This guarantee does not apply to graded sales (where the product is purchased as a “second”).
9. Possession of a copy of these terms and conditions does not necessarily mean that a product has the benefit of this guarantee. If you have any questions, please call our Call Centre on the number set out above.
10. The Manufacturer reserves the right to terminate the guarantee if its staff or representatives are subjected to physical or verbal abuse in the course of carrying out their duties.
11. Optional extras, where available (i.e. extendable feet) are supplied on a chargeable basis only.

Does Grundig offer replacements?

This is a repair-only guarantee. On occasion, the Manufacturer may at its sole discretion, replace your product with a new product instead of carrying out a repair. Where a replacement is offered, this would normally be an identical model but when this is not possible, a model of similar specification will be provided. The Manufacturer will cover the costs and arrange for the delivery of the new product and for the return of the old product. Any costs related to disconnecting the faulty product and installing the replacement product will not be borne by the Manufacturer unless previously agreed to in writing. The original guarantee will continue to apply to the replacement product; the new product will not come with a new guarantee.

When will the repair take place?

Our Engineers work Monday to Friday 9.00am to 5.00pm. Appointments outside these hours may be possible at the sole discretion of the Manufacturer but cannot be guaranteed. Whilst our Engineers will endeavour to minimize inconvenience and to meet requests for specific timed appointments, this cannot be guaranteed. We will not be liable for delays or if it is unable to carry out a repair because a convenient appointment cannot be arranged.

Will there be any charge for the repairs?

It is your responsibility to provide evidence to the Engineer that your product is covered by this guarantee with a proof of purchase. The Manufacturer reserves the right to charge for the reasonable cost of any service call if:

- You cannot provide evidence that your product is covered by this guarantee.
- Where a service call has been made and the engineer finds that there is no fault with your product.
- That your product has not been installed or operated in accordance with the User Instructions Booklet.
- That the fault was caused by something other than faulty materials, defective components or manufacturing defects.
- For missed appointments.

Payment of these costs are due immediately upon the Engineer providing you with an invoice. The Manufacturer reserves the right to terminate the guarantee if you fail to pay the costs for the service call in a timely manner.

If you are a resident of the United Kingdom, this guarantee will be governed by English law and subject to the English Courts, save where you live in another part of the United Kingdom, in which case the law and courts of that location will apply.
If you are resident in the Republic of Ireland, this guarantee will be governed by Irish law and the Irish courts will have jurisdiction.

This guarantee is provided by Beko plc. Beko House, 1 Greenhill Crescent, Watford, Hertfordshire. WD18 8QU.

Beko plc is registered in England and Wales with company registration number 02415578.

HOW TO OBTAIN SERVICE FOR YOUR APPLIANCE

Please keep your purchase receipt or other proof of purchase details in a safe place; you will need to have this documentation available should the product require attention under guarantee.

Please take a few moments to complete the details below, as you will need this information when you call us, or to use our online services. When you call us you may be required to input your serial number into your telephone keypad. For help please visit grundig.co.uk/support/model-finder

- The product model number is printed on the Operating Instruction Booklet / User guide
- The product model and serial number is printed on the Rating Label affixed to the appliance.
- The Retailer (Purchased from) and Date of purchase will be printed on your purchase receipt or other proof of purchase paperwork

Recording of these details alone will not count as proof of purchase.
A valid proof of purchase is required for requesting service under guarantee.

Model number	Serial number	Purchased from	Date of purchase

For service under guarantee or for product advice please call our Contact centre

Before requesting service please check the troubleshooting guide in the Operating Instructions booklet, as a charge may be levied where no fault is found, and even though your product may still be under guarantee.

After arranging service the area around the product must be easily accessible to the Engineer, without the need for cabinets or furniture to be removed or moved.

It is your responsibility to ensure our Engineers have a clean and safe environment to carry out any repairs.

Please have your Model number and Serial number available when you call us, as you may be required to input your serial number into your telephone keypad during your call.

UK Mainland & Northern Ireland:

0333 207 9920

Landline or mobile calls to 0333 numbers cost no more than calls to geographic numbers 01 or 02, and are charged at the basic rate. Calls from landlines and mobiles are included in free call packages but please check with your telephone service provider for exact call charges.

Republic of Ireland:

01 691 0203

Service once the manufacturers guarantee has expired

If you have purchased an extended guarantee please refer to the instructions contained within the extended guarantee agreement document, otherwise please call us using the appropriate number above, where service can be obtained at a charge.

Should you experience any difficulty in obtaining service please call us on **0333 207 9920** or **01 691 0203**

Contact us though our website

Send us a secure message through our online contact us form. Please visit our website, click Contact Us and choose a product support topic from the list of options. Complete the required details and click send message.

Product registrations

For UK and Republic of Ireland product registrations please visit grundig.co.uk/register.

DISCLAIMER / WARNING

Some (simple) failures can be adequately handled by the end-user without any safety issue or unsafe use arising, provided that they are carried out within the limits and in accordance with the following instructions (see the "Self-Repair" section).

Therefore, unless otherwise authorized in the "Self-Repair" section below, repairs shall be addressed to registered professional repairers in order to avoid safety issues. A registered professional repairer is a professional repairer that has been granted access to the instructions and spare parts list of this product by the manufacturer according to the methods described in legislative acts pursuant to Directive 2009/125/EC.

However, only the service agent (i.e. authorized professional repairers) that you can reach through the phone number given in the user manual/ warranty card or through your authorized dealer may provide service under the guarantee terms. Therefore, please be advised that repairs by professional repairers (who are not authorized by Grundig) shall void the guarantee.

Self-Repair

Self-repair can be done by the end-user with regard to the following spare parts: door handles,door hinges, trays, baskets and door gaskets (an updated list is also available in support.grundig.com as of 1st March 2021).

Moreover, to ensure product safety and to prevent risk of serious injury, the mentioned self-repair shall be done following the instructions in the user manual for self-repair or which are available in support.grundig.com. For your safety, unplug the product before attempting any self-repair.

Repair and repair attempts by end-users for parts not included in such list and/ or not following the instructions in the user manuals for self-repair or which are available in support.grundig.com, might give raise to safety issues not attributable to Grundig, and will void the warranty of the product.

Therefore, it is highly recommended that end-users refrain from the attempt to carry out repairs falling outside the mentioned list of spare parts, contacting in such cases authorized professional repairers or registered professional repairers. On the contrary, such attempts by end-users may cause safety issues and damage the product and subsequently cause fire, flood, electrocution and serious personal injury to occur.

By way of example, but not limited to, the following repairs must be addressed to authorized professional repairers or registered professional repairers: compressor, cooling circuit, main board,inverter board, display board, etc.

The manufacturer/seller cannot be held liable in any case where end-users do not comply with the above.

The spare part availability of the refrigerator that you purchased is 10 years.
During this period, original spare parts will be available to operate the refrigerator properly
The minimum duration of guarantee of the refrigerator that you purchased is 36 months.

Notes

Notes