FISHER & PAYKEL

INTEGRATED REFRIGERATOR & FREEZER

INTEGRATED REFRIGERATOR

RS6121S, RS6121SH, RS7621SH & RS7621S

INTEGRATED FREEZER

RS4621F, RS6121F & RS7621F

USER GUIDE

NZ AU UK BI SG HK

CONTENTS

Safety and warnings	4
Integrated refrigerator & freezer	9
Before you begin	10
Control panel — Refrigerator	11
Control panel — Freezer	12
Food modes	13
Storage features	15
Special features	16
WIFI connection	17
Using your appliance	18
Care and cleaning	23
Food care	26
User warnings and sounds	28
Troubleshooting	29
European Directive 2012/19/EU on Waste Electrical and Electronic Equipment (WEEE)	32
Service & warranty	33

Registration

To register your product visit our website: fisherpaykel.com/register

⚠ WARNING!



Electric Shock Hazard

Failure to do so can result in death, electric shock, fire or injury to persons.

- Read and follow the safety and warnings outlined in this user guide before operating this appliance.

⚠ WARNING!



This appliance contains flammable refrigerant isobutane (R600a).

READ AND SAVE THIS GUIDE

WARNING!

Read entire manual. Failure to follow all guides and rules could cause personal injury or property damage. When using this appliance, always exercise basic safety precautions including the following:

General Use

- This product has been designed for use in a normal domestic (residential) environment.
- Children should be supervised to ensure that they do not play with the appliance.
- Cleaning and user maintenance shall not be undertaken by children without supervision.
- Children aged 3 to 8 years may load and unload this appliance under supervision.
- This appliance can be used by children aged from 8 years and above and persons with reduced physical, sensory or mental capabilities or lack of experience and knowledge if they have been given supervision or instruction concerning use of the appliance in a safe way and understand the hazards involved.
- The manufacturer's installation instructions for product and cabinetry ventilation must be followed when installing the appliance.
- To avoid hazard due to instability of the appliance, it must be fixed in accordance with installation instructions.
- Keep ventilation openings, in the appliance enclosure or the built-in structure, clear of obstruction.
- Do not use mechanical devices or other means to accelerate the defrosting process, other than those recommended by the manufacturer.
- Do not damage the refrigerant circuit.
- In case of damage to the refrigerant circuit, ventilate the area by opening all windows.
- Do not operate electrical equipment or any other equipment that may produce arcs, sparks or flames in the area. Contact your Fisher & Paykel trained and supported service technician immediately to arrange for the appliance to be repaired.
- Connect to potable water supply only
- This refrigerating appliance is intended to be used at ambient temperatures ranging from 16 °C to 43 °C. The product performance may be compromised when operating outside of this temperature range.
- It is hazardous for anyone other than a Fisher & Paykel trained and supported service technician to service this appliance. In Queensland – the authorized Service Person MUST hold a Gas Work Authorisation for hydrocarbon refrigerants, to carry out Servicing or repairs which involve the removal of covers.

Electrical

- This appliance must be installed in accordance with the installation instructions before use.
- To allow disconnection of the appliance from the supply after installation, incorporate a switch in the fixed wiring in accordance with the wiring rules.
- Never unplug your refrigerator by pulling on the power cord. Always grip the plug firmly and pull straight out from the outlet.
- Do not plug in any other appliance at the same power point as your refrigerator or use extension cords or double adapters.
- Repair or replace immediately all electric service cords that have become frayed or otherwise damaged. Do not use a cord that shows cracks or abrasion along its length or at either the plug or appliance end.

- If the power supply cord is damaged, it must only be replaced by your Fisher & Paykel trained and supported service technician because special purpose tools are required.
- When moving your appliance away from the wall, be careful not to roll over or damage the power cord.
- WARNING: Do not use electrical appliances inside the food storage compartments of the appliance, unless they are of the type recommended by the manufacturer.
- When positioning the appliance, ensure the power cord is not trapped or damaged.
- Do not locate multiple portable socket-outlets or portable power supplies at the rear of the appliance.

Food safety

- Regularly clean accessible draining systems and surfaces that come in contact with food.
- Ensure any raw meat or fish is stored in sealed containers to prevent cross-contamination.
- Immediately clean any drips or spills on surfaces.
- If the appliance will be left empty for long periods, switch off, defrost, clean, dry, and leave the door open to prevent mould developing within the appliance.
- Opening the door for long periods can cause a significant increase of the temperature in the compartments of the appliance.

Storing food and drinks/wine

- Do not store explosive substances such as aerosol cans with a flammable propellant in this appliance.
- Never store volatile or flammable materials in your appliance as they may explode.
- Never freeze liquids in glass containers. Liquid expands during freezing, which may cause the container to explode.
- Never freeze carbonated drinks. They may explode.

Servicing

- Your refrigerator is designed to operate for many years without the need for service checks. However, if your refrigerator is malfunctioning, have it attended to by your Fisher & Paykel trained and supported service technician as soon as possible. All electrical repairs must be carried out by an adequately trained service technician or qualified electrician.
- The LED light cannot be serviced by the user. Contact your Fisher & Paykel Dealer or Fisher & Paykel trained and supported service technician.
- If you suspect that the product is not getting cold—items such as ice cream are melting—remove all perishable food and store in another appliance or cooler to prevent spoilage. Immediately call for a service technician.

Cleaning

- Use mild dish-washing liquid with warm water and a lint-free cloth to clean the product.
- Avoid using anti-bacterial cleaning products on either the interior or exterior of the cabinet as they may cause rusting of metal components and cracking of plastic components.

Disposal

- Extreme care must be taken when disposing of your old appliance to avoid hazards:
- The flammable refrigerant gas must be safely removed by a qualified service technician.

- The thermal insulation foam in this appliance may contain flammable insulation blowing gases, any exposed foam may be highly flammable and must be carefully treated during disposal.
- WARNING: Risk of child entrapment. Before you throw away your old refrigerator or freezer, the doors and panels should be removed and the racks left in place so that children may not easily climb inside.
- Consult your local energy authority or local codes as to the best way to dispose of your old appliance.
- Your Fisher & Paykel trained and supported service technician will be able to give advice on environmentally-friendly methods of disposing of your old refrigerator or freezer.

Water connection

- The water connection to your Ice & Water refrigerator must be installed by an authorised plumber or Fisher & Paykel trained and supported service technician and comply with all state and local laws.
- Installation and use MUST comply with all state and local plumbing codes. Check with your local public works department for plumbing codes. You must follow their guidelines as you install the water filtration system.
- If the water tank has not been used for an extended period of time, or has developed an unpleasant taste or odour, flush the water system. If the problem persists, replace the water filter cartridge and refer to the flushing instructions detailed in section 'Flushing through the water dispenser.
- To avoid serious illness or death, only connect your water filter to safe drinking water.
- The water filter cartridge needs to be changed when the replacement indicator icon illuminates. This will happen every 6 months.
- If the water filtration system has been allowed to freeze, replace filter cartridge. Failure to replace the disposable filter at recommended intervals may lead to reduced filter performance and failure of the filter, causing property damage from water leakage or flooding.
- In cases of excessively reduced filter life — we recommend that you consult a local plumber or your water supplier for advice on suitable filtration requirements for the water supplied to your home.
- Filter replacement is the consumer's responsibility and will not be covered by the warranty except in the case of faulty parts or materials within the filter cartridge.
- If the water has not created ice for some time or ice has an unpleasant taste or odour dispose of ice and refer to 'Automatic ice' for flushing instructions. If unpleasant taste or odour persists, you may wish to fit a new filter cartridge.
- Use new tubing supplied with the refrigerator. DO NOT reuse old tubing from old water and ice connections.
- Your water filtration system can withstand up to 120psi (827kPa) of water pressure.
- Ensure the supplied pressure limiting valve is installed before installing the water filtration system. DO NOT install if water pressure exceeds 120psi (827kPa).
- To reduce the risk associated with property damage due to water leakage or flooding:
- DO NOT install systems in areas where ambient temperatures may go above 100°F (38°C) or drop below 33°F (0.6°C).
- DO NOT install on hot water supply lines. The maximum operating water temperature of this filter system is 100°F (38°C).
- DO NOT install where water hammer conditions may occur. If water hammer conditions exist, you must install a water hammer arrester.

WARNING!

To reduce the risk associated with choking:

- DO NOT allow children under 3 years of age to have access to small parts during the installation of the water filter.

Ice making

- Avoid contact with the moving parts of the ice maker ejector mechanism, and do not place your fingers on the automatic ice- making mechanism while the appliance is in operation.
- At first use or after water filter has been replaced, there may be discolouration in the first bin of ice cubes. Discard the discoloured ice cubes. If discolouration continues in succeeding bins, contact your Fisher & Paykel trained and supported service technician.

Power failure

- In the event of a power interruption, the appliance will automatically save the current temperature settings. When power is recovered, the appliance will revert to the current temperature settings only.
- Most power failures are corrected within a short period of time. 1 – 2 hours loss of power will not affect the appliance's temperatures.
- To avoid sudden change of temperature while the power is off, you should avoid opening the door. A refrigerator will keep food safe for up to 4 hours during a power outage. Keep the door closed as much as possible. Discard refrigerated perishable food such as meat, poultry, fish, eggs, and leftovers after 4 hours without power.

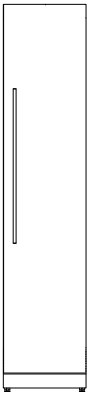

18" Freezer
RS1884F

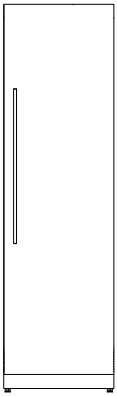

24" Freezer
RS2484F

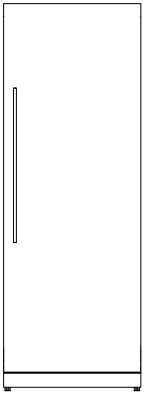

30" Freezer
RS3084F

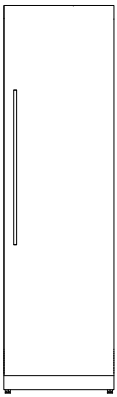

24" Refrigerator
RS2484S & RS2484SH

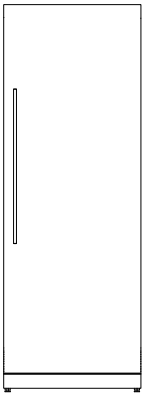

30" Refrigerator
RS3084S & RS3084SH

All models available in Left and Right door hinges

BEFORE YOU BEGIN

- Ensure the installer has completed the final checklist in the installation instructions.
- Read this guide, taking special note of the Safety and Warnings section.
- Remove all packaging and dispose of it responsibly. Recycle items that you can.

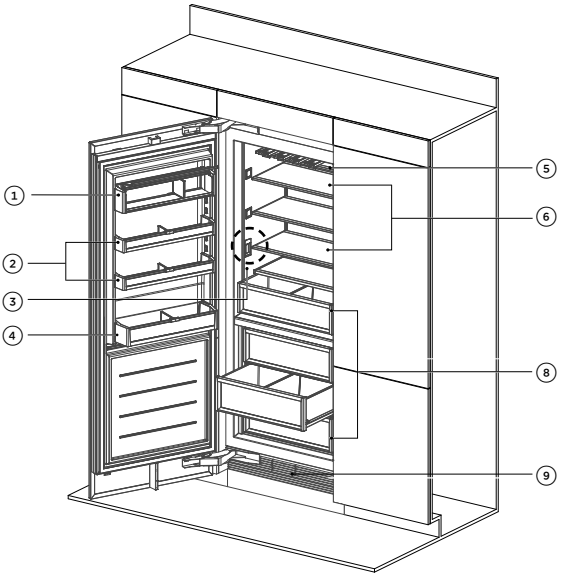

Refrigerator features

1. Dairy compartment
2. Door shelves
3. Internal water dispenser
4. Gallon shelf
5. Bottle racks
6. Shelving
7. Humidity control bins
8. Water filter (not shown)

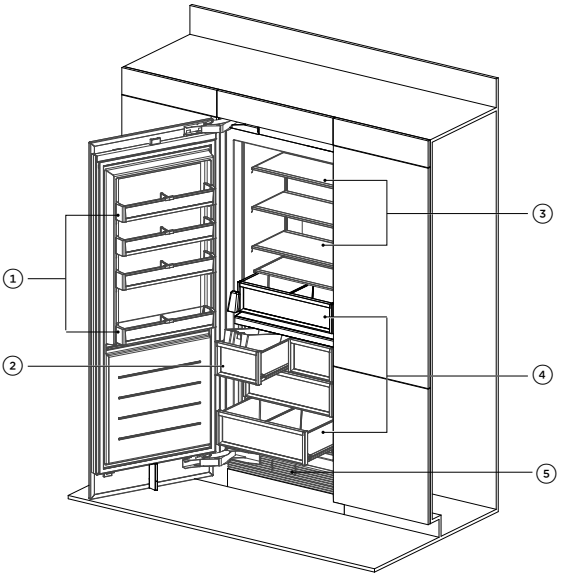

Freezer features

1. Door shelves
2. Ice maker
3. Shelving
4. Freezer bins
5. Water filter (not shown)

CONTROL PANEL — REFRIGERATOR

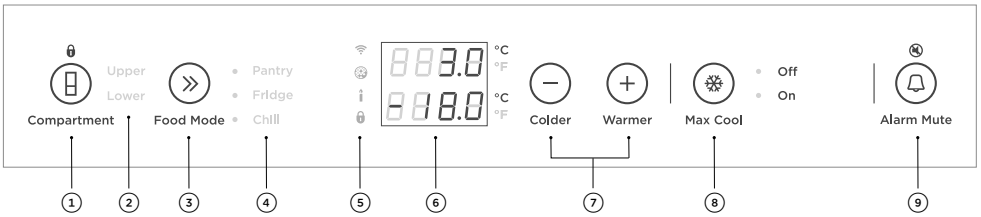

1	Allows you to unlock the control panel and enable compartment selection. Press 4 seconds to activate your appliance for the first time. The control panel will automatically lock when inactive for more than 10 seconds or when the door is closed. To unlock, press for 2 seconds.
2	Lights illuminate to show which compartment is selected.
3	Allows you to select the food mode for the selected compartment.
4	Lights illuminate to show which food mode is selected.
5	WiFi illuminates when functionality is activated.
	Illuminates when the water filter needs replacement.
	Illuminates to indicate that Sabbath mode is activated.
	Illuminates to indicate that the keys on the control panel are locked. When the door is closed the display is automatically locked.
6	Displays the set temperature of the compartments. To change between Celsius and Fahrenheit on the display: • Press » and + together for 4 seconds.
7	Allows you to adjust the temperature of the selected compartment.
8	Boosts the cooling speed of your refrigerator by dropping the compartment to its coldest temperature for a set time, dependent on the food mode in use.
9	This button has a dual function—it allows you to deactivate door alarms for 20 minutes and/or mute key tones on the control panel.

CONTROL PANEL — FREEZER

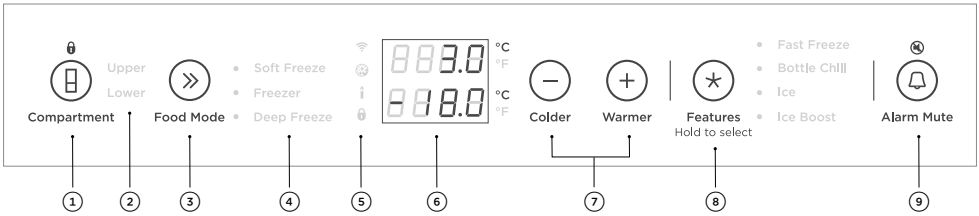

1	Allows you to unlock the control panel and enable compartment selection. Press 4 seconds to activate your appliance for the first time. The control panel will automatically lock when inactive for more than 10 seconds or when the door is closed. To unlock, press for 2 seconds.
2	Lights illuminate to show which compartment is selected.
3	Allows you to select the food mode for the selected compartment.
4	Lights illuminate to show which food mode is selected.
5	WiFi illuminates when functionality is activated.
	Illuminates to indicate that water filter replacement is required.
	Illuminates to indicate that Sabbath mode is activated.
	Illuminates to indicate that the keys on the control panel are locked. When the door is closed the display is automatically locked.
6	Displays the set temperature of the compartments. To change between Celsius and Fahrenheit on the display: • Press + and » together for 4 seconds.
7	Allows you to adjust the temperature of the selected compartment.
8	Allows you to scroll and select features: • Fast Freeze • Bottle Chill • Ice • Ice Boost Refer to 'Special Features' for details on these features.
9	This button has a dual function—it allows you to deactivate door alarms for 20 minutes and/or mute key tones on the control panel.

FOOD MODES

Variable temperature zones

Separate food modes, in both fridge and freezer, allow you to adjust the temperature independently for optimal storage.

Refrigerator

FOOD MODES	DESCRIPTION	TYPES OF FOOD TO STORE
Pantry (12°C/54°F)	Pantry mode provides a cool, dark place for a wide variety of foods that perish quickly or may spoil at room temperature, but are too sensitive to be stored at normal refrigerator temperatures. Pantry mode runs under Cellar Compartment storage conditions as per Commission Regulation (EU) 2019/2019.	Bananas, avocados, tomatoes. Dry food items such as grains, flours, sugars, crackers, cereal, baked goods, tortillas, wraps and breads. Spreads, preserves, honey, tropical fruits, nuts and seeds, chocolate and fresh herbs. Wine
Fridge (3°C/37°F)	The ideal mode for fresh, everyday foods. This mode offers a higher relative humidity than many other refrigerators allowing fresh foods such as fruits and vegetables, meats and cheeses to stay fresher for longer.	Fruit and vegetables, dairy products, jams and chutneys/preserves, meats and drinks.
Chill (-0.5°C/31°F)	Chill mode is an extension of Fridge mode, providing the perfect storage zone for highly perishable food to ensure they retain their vital freshness and quality. These items will last slightly longer here compared with storage at 'Fridge' mode. Note: Ensure these highly perishable items are consumed within their recommended storage times.	Highly perishable meats, poultry and seafood. Alcoholic beverages such as beer.

Note: Not all combinations of food modes are available in all compartments. If a food mode is not available, it will be disabled on the control panel.

FOOD MODES

Freezer		
FOOD MODES	**DESCRIPTION**	**TYPES OF FOOD TO STORE**
Soft Freeze (-9°C/16°F)	Soft Freeze mode is an extension of your refrigerator, extending the shelf life of perishable items while maintaining the quality. 'Soft Freeze' mode allows easy portioning of food and the ability to heat, cook or serve foods straight from the compartment without waiting for it to thaw.	Meats, seafood, soups, sauces, pureed foods, bread, desserts and pastries. Note: Soft Freeze mode is not recommended for storage of creamy desserts such as ice cream.
Freezer (-18°C/0°F)	Freezer mode is for general frozen food items that require storage between 1–12 months.	Meat, poultry, seafood, pre-cooked foods and leftovers, some fruits and vegetable, ice cream, and other frozen desserts.
Deep Freeze (-25°C/-13°F)	Deep Freeze mode is for frozen food items that may need to be stored for longer periods. 'Deep Freeze' extends the shelf life of general frozen items by up to 6 months longer than that of Freezer mode.	General frozen food that is required to be stored for extended times—eg larger cuts of meat.

Note: Not all combinations of food modes are available in all compartments. If a food mode is not available, it will be disabled on the control panel.

STORAGE FEATURES

REFRIGERATOR	
Fruit and vegetable bins/Slim bin with humidity control lids	Separate fruits and vegetables to prevent the ethylene-sensitive produce from ripening too quickly-helps to extend their storage life.
	Also used for storing deli items and beverages, or for defrosting foods.
Cantilever glass shelving	Heat-treated safety glass
	Can be removed and positioned at heights to suit your storage requirements.
Dairy shelf and door shelves	The top door shelf is a dairy compartment for storing butter and cheeses.
	The middle shelves are designed for general items, condiments and drinks.
	The bottom shelves are designed to store large drinks or those drinks you require frequent access to.
	Clear windows give ultimate visibility to what is being stored in the door shelves.
	Adjustable door shelves with dividers.
Single bottle holders	Can be placed along the length of any shelf (except half-depth cantilever shelves) to store a variety of bottles.
Half-depth cantilever shelf bottle holders	Can be placed only on half depth cantilever shelves to store a variety of bottles.
	Store bottles with the neck facing the front of the refrigerator.
	Unused bottle holders can be stacked on top of one another to maximize shelf space.

FREEZER	
Cantilever glass shelving	Heat-treated safety glass
	Can be removed and positioned at heights to suit your storage requirements.
Door shelves	Designed for general items, condiments and drinks.
	Adjustable door shelves with dividers.
Top bin with removable ice container and hygienic ice scoop	For storing large or small frozen food items.
Mid tray	For storing smaller food items.
Large bottom steel bin	For storing multiple frozen food items or large food items.

Max Cool

Boosts the cooling speed of your refrigerator by dropping the refrigerator to its coldest temperature for a set time (Pantry - 6 hours, Fridge - 6 hours, Chill - 4 hours) dependent on the food mode in use.

Fast Freeze

Boosts the freezing speed by dropping the freezer to its coldest temperature for a set time dependent on the food mode in use. Offered on 'Soft Freeze' and 'Freezer' modes (Soft Freeze - 12 hours, Freezer - 12 hours).

We recommend using 'Max Cool' or 'Fast Freeze' when you are adding food items to your appliance, such as after grocery shopping. This feature will ensure the food is chilled/frozen within the shortest period of time, locking in the freshness and extending the shelf life of your food.

Bottle Chill

This feature allows you to rapidly chill your beverages in the freezer for 15 minutes. Depending on the size of your beverage, the default time may not be enough to chill your beverage. If your beverage is not cold enough after the set time, return it to the compartment and reset the 'Bottle Chill' feature.

Ice*

Turns on your automatic ice. This feature is only available in the lower compartment.

Ice Boost*

Increases ice production by up to 30%, and deactivates automatically after 24 hours.

* This feature is not available if the compartment is set to 'Soft Freeze'. If ice making is turned on and the food mode is changed to 'Soft Freeze' any ice that is already in the ice bin may melt and form clumps. To avoid this either remove the ice or use a different compartment for 'Soft Freeze'.

WIFI CONNECTION

Your appliance can be connected to your home wireless network and operated remotely using the app.

Getting started

- Ensure your home WiFi network is turned on.
- You will be given step by step guidance on both your appliance and mobile device.
- It may take up to 10 minutes to connect your appliance.

On your mobile device:

① Download the app from www.fisherpaykel.com/connect
② Register and create an account.
③ Add your appliance and set up the WiFi connection.

Once you turn on your refrigerator for the first time, the compartments will automatically default to the recommended temperature setting. The control panel enables you to change and control the temperature of all compartments accurately and independently.

For best storage of general household food items, we recommend to use the appliance at its factory default temperature and configuration settings. Adjusting temperature and moving the shelves and bins will have minimal impact on efficiency.

» Selecting the Food Mode

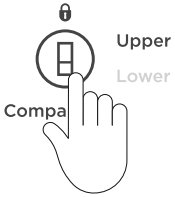

Select the desired compartment.

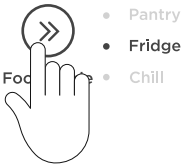

Press » to scroll through the available **FOOD MODE**.

A light illuminates to indicate the matching **FOOD MODE** as you scroll down the list.

Adjusting the temperature

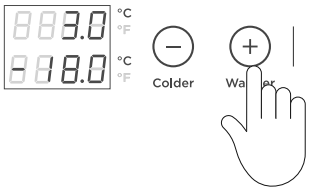

Press + to increase the temperature of the selected food mode.

Press — to decrease the temperature of the selected food mode.

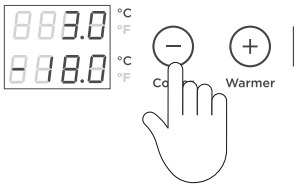

✳ Selecting Features



Press ✳ to scroll through the available **FEATURES** for the compartment and food mode you have selected.

To activate:

Select from the list by scrolling through and stopping at your preferred feature.

A blinking light indicates the current feature when scrolling through the list.

Press ✳ for 2 seconds to activate.

Bottle Chill (Freezer only)



When activated, an alarm will sound, **BOTTLE CHILL** will flash and will illuminate after the elapsed time to remind you to remove your beverage.

To silence the alarm::

Press ✳ once.

The time taken to chill depends on the size of your beverage. If your beverage is not cold enough after the set time, return it to the compartment and reset the **BOTTLE CHILL** feature.

Key lock

Allows you to disable the buttons on the control panel. This is useful when cleaning your appliance.



To activate:

Press for 2 seconds. The icon on the control panel will illuminate.



To deactivate:

Press for 2 seconds. The icon will not illuminate.

Alarm mute



To activate:

To activate, press 🔔 once. The 🔕 will illuminate to indicate the refrigerator is muted.

ALARM MUTE will deactivate after 20 minutes. Press 🔔 To deactivate manually,

Closing the door also deactivates the ALARM MUTE.

Sabbath mode

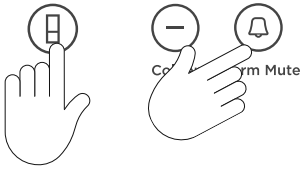

To activate:

Press ⊟, — and 🔔 together for 4 seconds.

The 🕯 icon on the control panel will illuminate. When activated, the display, all alarms and lights are deactivated for 80 hours.

To deactivate manually:

Press ⊟, — and 🔔 together for 4 seconds.

Note: If you turn off your appliance while in Sabbath mode, it will resume automatically once the appliance is switched on again.

Key mute



To activate:

Press 🔔 for 2 seconds, a single confirmation beep will be heard. Once key mute is activated, all key sounds are silenced.

Door alarms and the BOTTLE CHILL alarm are still operational.

To deactivate:

Press 🔔 for 2 seconds, a single confirmation beep will be heard.

Door alarms

- If the refrigerator door is left open, the alarm will beep after 90 seconds.
- If the freezer door is left open, the alarm will beep after 60 seconds.
- If the door remains open, subsequent beeps will sound every 30 seconds for 5 minutes.
- If the door remains open for 5 minutes or longer, an alarm will sound continuously and the interior compartment light(s) will turn off.

Water filter

The water supplied to your appliance is filtered to remove impurities through a filter located the bottom front of your appliance. Replace your filter cartridge every 6 months.

- A replacement indicator icon on the control panel illuminates to indicate the filter needs to be replaced.
- Replacement filter cartridges can be purchased online from fisherpaykel.com or by calling Fisher & Paykel Customer Care. Details of the replacement filter cartridge are labelled on the cartridge. Instructions on how to install your replacement water filter are provided with the filter.

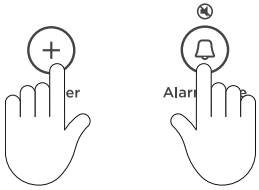

To reset the filter indicator:

Press + and 🔔 together for 4 seconds.

The on the control panel will turn off when reset.

Internal water dispenser (Refrigerator only)

The water dispenser is located inside on the left side wall of the refrigerator compartment.

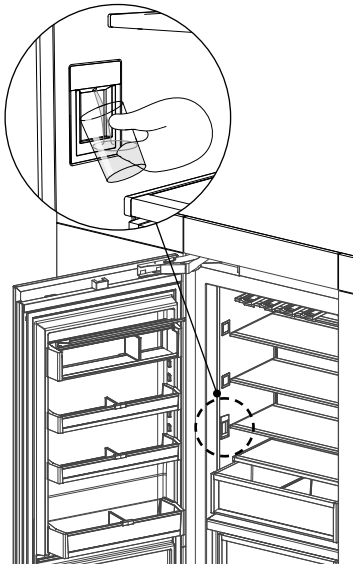

To dispense water, gently press the dispensing pad with a glass or container.

To stop the flow of water, simply pull your glass or container away from the dispensing pad.

Pressing hard against the dispensing pad will not increase the flow or dispense more water.

Flushing through the water dispenser

Press the water dispenser pad to dispense one gallon (4L) of water.

- The dispensed water may contain harmless carbon residue during the flushing process.

Wait for 4 minutes before dispensing again.

Dispense one gallon (4L) of water then wait another four minutes.

Dispense another one gallon (4L) of water. Your water dispenser is ready for use.

- Water may continue to drip from the dispenser for a few more days after installation.

Automatic ice maker (Freezer only)

Before turning on your automatic ice maker, the water filter must be installed (refer to your installation guide) and flushed to remove any impurities or trapped air in the filter system.

1



To activate the ice maker, press ✳ to scroll and select **ICE** from the list.

2

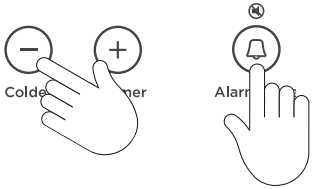

Flushing through the ice maker

Press the —, + and 🔔 together for 4 seconds then close the doors.

The ice tray will empty the water into the bin below. The ice tray will only empty after the doors are closed.

Repeat to remove dust in the ice tray collected during manufacture and transport.

3

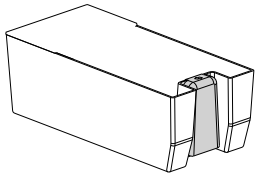

Empty the water, dry the bin and return it correctly.

Once your ice maker is turned on the first bin of ice may be discoloured, this is not harmful and normal during the flushing process. Discard the first full bin of ice made. Your ice maker is now ready for use.

Turn the ice maker off if:

- There is no water supply for several hours.
- You are removing the ice storage bin for a period of time.
- You are going on holiday/vacation.

Exterior cleaning

The condenser coils of your Integrated Column require periodic cleaning by a Fisher & Paykel trained service technician.

Toe kick grilles and filter

Your Integrated Column is fitted with a toe kick grille to protect the internal working components. We recommend cleaning the grille and filter in conjunction with changing your water filter cartridge (every 6 months).

① To maximize operating efficiency, keep ventilation openings clear of obstructions by regularly vacuuming the flooring in front of your appliance.

② More frequent cleaning may be necessary for dusty homes or those with pets shedding hair.

Interior cleaning

Do not use harsh chemicals, abrasives, ammonia, chlorine, bleach, concentrated detergents, solvents or abrasive scouring pads on any part of your appliance. Some of these chemicals may damage your appliance.

Clean all surfaces with a mild liquid detergent dissolved in warm water and a soft cloth. Rinse with clean water and dry with a clean, lint-free cloth.

1

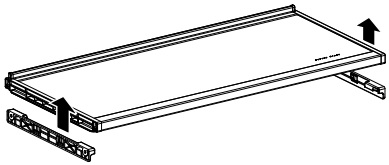

Cantilevered glass shelves

To remove, hold the front and back edge of the shelf firmly.

Push the shelf up vertically to dislodge from back support lugs.

2

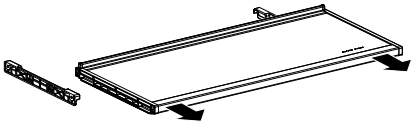

Pull the shelf towards you.

3

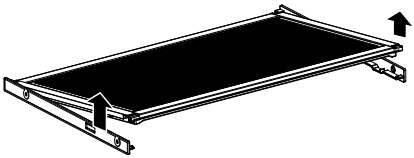

Humidity control lids — Fixed shelf

To remove, lift the front edge of the shelf up.

4

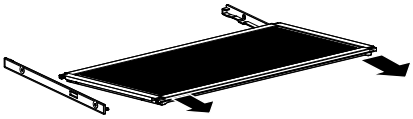

Pull the shelf towards you to unclip from the runners.

Removing the top bin

The runners are pre-lubricated to help open and close the bins. Do not remove the grease from the runners to maintain its smooth function.

1

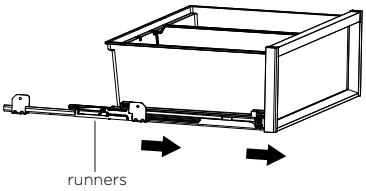

To remove a bin, extend the bin on its runners, and empty the bin.

2

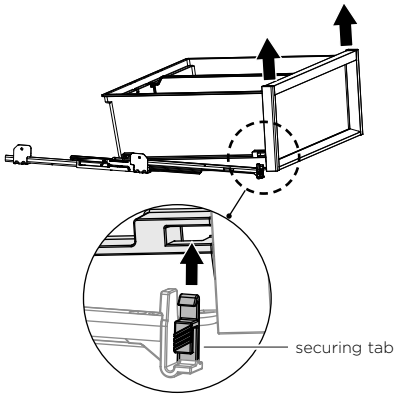

Push the securing tabs on both sides of the bin corners, then push the bin firmly upwards to dislodge from the runners.

3

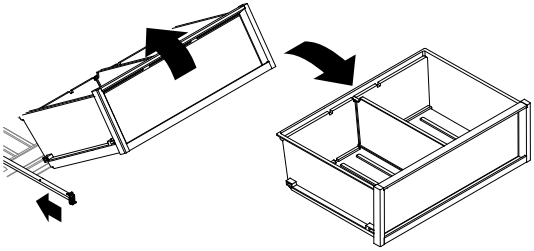

Pull the bin towards you to remove. Push both runners back into the appliance.

4

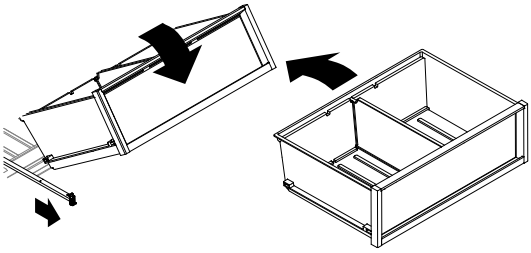

To return the bin, extend the runners and place the bin on top of the runners.

5

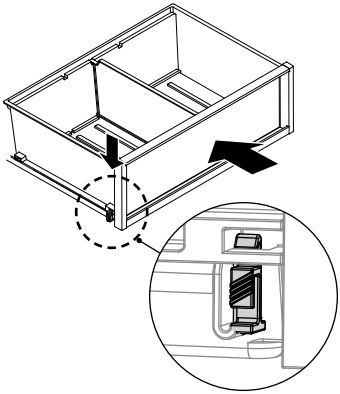

Push the bin slowly onto the securing tabs until you feel it clip onto the runners. Ensure the bin tabs are clipped securely onto the runners before use.

Holiday/vacation (Freezer only)

Before leaving:

Turn the ice maker to OFF on the control panel.

Shut off the water supply to the appliance.

On return:

Turn on the ice maker. Discard the first full bin of ice.

For best food care

- Store only high-quality, fresh food in your appliance.
- Store perishable foods in the appliance immediately after purchase. Storing at room temperature increases the rate of deterioration and can allow harmful microbial growth.
- Foods such as meat, poultry and seafood should be well wrapped or sealed in suitable packaging to prevent dehydration, colour deterioration, loss of flavour, and transfer of odour.
  Note: We recommend storing these foods on the bottom shelf of your appliance or in one of the bins to prevent potential spills and cross-contamination with other foods.
- Ensure hot foods and beverages are cooled sufficiently before placing them into the appliance. Hot items may cause other foods to warm to unsafe temperatures. It may also cause sealed items to sweat/condensate—which is undesirable.
- Beverages are best stored standing upright in the door shelves or on the bottle racks provided.
- Ensure raw and cooked foods are stored separately to avoid cross-contamination.
- Consume food items within the recommended storage times. Discard foods that show sign of spoilage.
- Keep door openings to a minimum to maintain optimum storage temperatures inside your appliance.
- We recommend using MAX COOL or FAST FREEZE when you are adding food items to your appliance, such as after grocery shopping. This feature will ensure the food is chilled/ frozen within the shortest period of time, locking in the freshness and extending the shelf life of your food.
- Storing at temperatures other than the recommended settings may impact the storage life.
- For common foodstuffs, factory default setting provides the optimum setting for foodcare.

Items stored in your refrigerator

- Dairy items such as butter and cheeses should be stored in the covered door shelf to minimise any transfer of odour or odour absorption from other foods.
- Eggs should be stored in their carton to avoid absorption of strong odours through their porous shell structure.
- Do not store chill sensitive items such as fruits and vegetables in a compartment when it is set to Chill mode. Cold temperatures may result in damage such as chill or freezing injury.

Items stored in your freezer

- We recommended cooling carbonated beverages only when the BOTTLE CHILL function is active.
  Note: Do not store carbonated drinks without this function in the freezer.
  Failure to remove beverages could lead to freezing liquid and the likelihood of bottle/ can explosion.
- Ensure air is removed from packaging to avoid large formation of ice crystals and prevent freezer burn.
- Do not store foods to be frozen in contact with food for storage. If defrosting frozen food in the refrigerator compartment ensure frozen items are not in contact with fresh foods.
- Defrosting food repeatedly is not recommended. Frozen foods that will be used regularly should be stored in smaller quantities.

Faults

- In the unlikely event a fault occurs, four rapid beeps will be heard and the fault will be displayed on the control panel.
- Record the fault code displayed on the control panel and contact a Fisher & Paykel trained and supported service technician in order to repair the fault. You can do this by going online to fisherpaykel.com or by contacting our Customer Care Centre.

Normal appliance sounds

Integrated Columns has been designed to have excellent energy ratings and cooling performance. As a result, it can produce sounds somewhat different to your old appliance.

WARNING/ SOUND	DESCRIPTION
Low frequency ticking	This is the valve that controls cooling to each compartment. This noise will only last for a few seconds at a time.
Fan air flow	Integrated Columns has fans which change speed depending on demand. During cooling periods, such as after frequent door openings, fans circulate the cold air in the appliance producing some air flow sound. This is quite normal.
Cracking or popping	This may occur when the automatic defrost function is operating.
Running water	This is the liquid refrigerant in the system and can be heard as a boiling or gurgling noise.
Hissing sound after closing the freezer door	This is due to the pressure difference between the warm air that has entered the cabinet and suddenly cooled, and the outside air pressure.
Humming	This is the compressor running and is quite normal.
Gasket	Normally occur over time due to a build up of dirt and/or grime. See ‘Exterior cleaning’ section.
Ice maker	
Low humming	Motor operation.
	Running water as the ice maker and/or water tank fills.
Hissing	Water valve opening and closing.
Cracking	Loosened from the ice molding tray.
Clunking	Ice dropping into bin.
Other sounds	Cabinet not stable or level.
	Bottles or jars rattling on shelves

TROUBLESHOOTING

If there is a problem with your appliance, please check the following points before contacting your local Fisher & Paykel trained and supported service technician or the Customer Care Centre.

Product parts and accessories can be purchased through the Fisher & Paykel Customer Care Centre, or online at fisherpaykel.com (this service is available to selected markets only).

PROBLEM	POSSIBLE CAUSES	WHAT TO DO
Appliance does not operate	No electricity at power outlet.	Check that the plug is correctly connected and power switched on.
		Check another appliance at the same outlet.
		Check house breaker.
Light not working	Light not functioning.	The lighting cannot be serviced by the user. Contact your Fisher & Paykel dealer or trained and supported service technician.
	Appliance not working.	Check appliance is turned on at the wall or at the isolating switch.
Light and display not working	Product in Sabbath mode.	Press [▯], — and 🔔 together for 4 seconds.
Storage compartments too warm	Temperature setting not correct.	See 'Adjusting the temperature' section of this User guide.
	Frequent door openings.	Minimise door openings to allow temperature to stabilize.
	Large amount of food has been recently added.	Select **MAX COOL** or **FAST FREEZE** features to assist in lowering the temperature quickly.
Food freezing in the refrigerator	Temperature setting is too cold.	Increase the temperature setting. See 'Adjusting the temperature' section of your user guide.
	Food placed directly in front of air outlets.	Move chill sensitive foods away from the air outlets.
Unfamiliar noises	Cabinet not stable or level.	See Installation guide supplied with this appliance.
	Freezer is defrosting.	This is normal.
Ice maker sounds	Normal ice maker operation.	See 'User warnings and sounds' section.
Food Mode is not available	Not all combinations of food modes are available in all compartments.	Try to select the desired Food Mode in a different compartment.

TROUBLESHOOTING

PROBLEM	POSSIBLE CAUSES	WHAT TO DO
When the appliance door is opened 4 rapid beeps sound and a code is displayed on the control panel		Record the code on the control panel and contact Customer Care Centre.
Water in the vegetable bins	Condensation is formed by the water produced by fruit and vegetables.	A small amount of condensation is beneficial for fruit and vegetable storage.
		Wipe out water with a cloth.
Exterior of cabinet is warm	Note: **This is normal.**	
Condensation on outside of appliance	Not unusual during periods of high humidity.	Wipe dry.
Condensation/ice inside compartment	Frequent or long door openings.	Minimise door openings.
	Door gasket leaking.	Check and clean door gasket seal.
	Not unusual during periods of high humidity.	Wipe dry.
	Door not closing tightly.	Arrange items in the compartment so door can close tightly.
	Doors not aligned.	Call a service technician.
Bin does not slide in and out evenly	Packaging trapped.	Check to ensure no food or packaging is trapped behind the tray/bin.
Door not closing	An obstruction is blocking door closing.	Move obstruction.
	Appliance not installed correctly.	Refer to your Installation guide supplied with this appliance to ensure your appliance has been installed correctly.
Freezer door will not open	The door has been recently opened.	Wait 30 seconds and try again.
Small or large ice cubes	Water line is kinked/squashed.	Check the external water line is not kinked/squashed. If it is not kinked/ squashed contact Customer Care to arrange a technician to check the internal water line.
	Blocked water filter.	Change filter before calling technicians.
Frozen food items are soft or melting		Remove items and place in another freezer or cooler and call Customer Care immediately.

TROUBLESHOOTING

PROBLEM	POSSIBLE CAUSES	WHAT TO DO
Automatic ice maker does not work	Ice maker has not been turned on.	Switch on ice maker, see 'Automatic ice maker (Freezer only)' section.
	Water supply turned off or not connected.	Connect the water supply.
	Freezer compartment not working.	Contact Customer Care Centre.
	Water pressure too low.	Check water pressure.
	Water line kinked/squashed.	Check water line for kinks/squashing.
	Filter is clogged.	Water filter may need replacing.
	Ice cubes sticking in ice bin.	Remove ice storage bin, loosen cubes and remove clumped ice. Replace ice storage bin.
	The food mode is set to 'Soft Freeze'.	Change the food mode from **SOFT FREEZE**.
Ice cubes taste tainted	Unsealed packages may be transmitting odour/taste.	Discard ice cubes and clean ice storage bin. See 'Interior cleaning' section.
		Wrap or cover strong smelling foods.
	Poor taste from incoming water.	Replace filter cartridge product parts and accessories can be purchased through our Customer Care Centre.
Slow ice cube freezing	Door may have been left ajar.	Close door.
	Freezer compartment set too warm.	Turn temperature to a colder setting. See 'Using your appliance' section.
Wet ice/ ice clumping	Long freezer door openings.	Gently tap ice to unstick or, if large clumps occur, empty ice bin and make new ice.
	High ambient temperature.	
	Ice bin left out of freezer compartment for a length of time.	
	Ice will stick together over time.	
Ice is discoloured	Water filter has not been flushed.	Refer to your installation guide supplied with your appliance for details on how to flush your water filter.

EUROPEAN DIRECTIVE 2012/19/EU ON WASTE ELECTRICAL AND ELECTRONIC EQUIPMENT (WEEE)

EU This appliance is marked according to the European Directive 2012/19/EU on Waste Electrical and Electronic Equipment (WEEE). By ensuring this product is disposed of correctly, you will help prevent potential negative consequences for the environment and human health, which could otherwise be caused by inappropriate handling of this product.

The symbol  marked on the serial plate, or on the documents accompanying the product, indicates that this appliance cannot be treated as household waste. It shall be handed over to the applicable collection point for the recycling of electrical and electronic equipment. Disposal of the appliance shall be carried out in accordance with the local environment regulations for waste disposal and ensure the refrigerant circuit is not damaged.

For more detailed information about treatment, recovery and recycling of this product, please contact your local city office, your household waste disposal service or your Fisher & Paykel retailer/dealer from whom you purchased this product.

SERVICE & WARRANTY

For details of your manufacturer's warranty and contacts for servicing, refer to your separate service and warranty book provided with your appliance.

This product has been designed for use in a normal domestic (residential environment). This product is not designed for any commercial use. Any commercial use by the customer will affect this products manufacturer's warranty.

For spare parts, please contact Fisher & Paykel Customer Care. Spare parts are available for all Fisher & Paykel refrigerators for a minimum period of 10 years from the date of manufacture.

Complete and keep for safe reference:

Model _____

Serial No. _____

Purchase Date _____

Purchaser _____

Dealer _____

City _____

State _____

Zip _____

Country

FISHERPAYKEL.COM

© Fisher & Paykel Appliances 2020. All rights reserved.

The models shown in this guide may not be available in all markets and are subject to change at any time.

The product specifications in this guide apply to the specific products and models described at the date of issue. Under our policy of continuous product improvement, these specifications may change at any time.

For current details about model and specification availability in your country, please go to our website or contact your local Fisher & Paykel dealer.

866277B 12.20