Final trim size: 8.268 × 11.693 in. (210 × 297 mm)
V1
FINAL
FOR PRINT
NS-CF17BK9_26BK9_26WH9_17-0786__MAN_V1_EN.fm Page 1 Tuesday, December 19, 2017 9:12 AM

INSIGNIA™

# USER GUIDE

# 1.7 or 2.6 Cu. Ft. Compact Refrigerator

**NS-CF17BK9**
**NS-CF26BK9**
**NS-CF26WH9**

Before using your new product, please read these instructions to prevent any damage.

NS-CF17BK9_26BK9_26WH9_17-0786__MAN_V1_EN.fm Page 2 Tuesday, December 19, 2017 9:12 AM

INSIGNIA™

# Contents

Introduction . . . . . 3
IMPORTANT SAFETY INSTRUCTIONS . . . . . 3
Grounding requirement . . . . . 4
Features . . . . . 5
Package contents . . . . . 5
Exterior . . . . . 5
Interior . . . . . 7
Setting up your refrigerator . . . . . 7
Before using your refrigerator . . . . . 7
Finding a suitable location . . . . . 8
Providing the correct power source . . . . . 8
Leveling your refrigerator . . . . . 8
Reversing the refrigerator door . . . . . 8
Setting the thermostat . . . . . 11
Defrosting your refrigerator . . . . . 11
Shutting down your refrigerator for a long time (several months) . . . . . 12
Moving your refrigerator . . . . . 12
Tips on saving energy . . . . . 12
Troubleshooting . . . . . 12
Specifications . . . . . 14
ONE-YEAR LIMITED WARRANTY . . . . . 15

NS-CF17BK9_26BK9_26WH9_17-0786__MAN_V1_EN.fm Page 3 Tuesday, December 19, 2017 9:12 AM



# 1.7 or 2.6 Cu. Ft. Compact Refrigerator

## Introduction

Congratulations on your purchase of a high-quality Insignia product. Your NS-CF17BK9, NS-CF26BK9, or NS-CF26WH9 represents the state of the art in compact refrigerator design and is designed for reliable and trouble-free performance.

# IMPORTANT SAFETY INSTRUCTIONS

**CAUTION**
**RISK OF ELECTRIC SHOCK**
**DO NOT OPEN**



This symbol indicates that dangerous voltage constituting a risk of electric shock is present within your refrigerator.



This symbol indicates that there are important operating and maintenance instructions in the literature accompanying your refrigerator.

### WARNING

**1** Read these instructions.

**2** Keep these instructions.

**3** Heed all warnings.

**4** Follow all instructions.

**5** Do not use your refrigerator near water.

**6** Clean only with a damp cloth.

**7** Do not block any ventilation openings. Install in accordance with the manufacturer's instructions.

**8** Do not install near any heat sources, such as radiators, heat registers, stoves, or other apparatus (including amplifiers) that produce heat.

**9** Do not defeat the safety purpose of the polarized or grounding-type plug. A polarized plug has two blades with one wider than the other. A grounding type plug has two blades and a third grounding prong. The wide blade or the third prong are provided for your safety. If the provided plug does not fit into your outlet, consult an electrician for replacement of the obsolete outlet.

**10** Protect the power cord from being walked on or pinched, particularly at plugs, convenience receptacles, and the point where it exits from your refrigerator.

**11** Do not attempt to modify or extend the power cord of your refrigerator.

**12** Unplug your refrigerator during lightning storms or when it will not be used for long periods of time.

**13** Make sure that the available AC power matches the voltage requirements of your refrigerator.

**14** Do not handle the plug with wet hands. This could result in an electric shock.

**15** Unplug the power cord by holding the plug, never by pulling the cord.

**16** Turn off your refrigerator before unplugging it.

**17** Refer all servicing to qualified service personnel. Servicing is required when your refrigerator has been damaged in any way, such as the power-supply cord or plug is damaged, liquid has been spilled or objects have fallen into your refrigerator, your refrigerator has been exposed to rain or moisture, does not operate normally, or has been dropped.

**18** To reduce the risk of fire or electric shock, do not expose your refrigerator to rain, moisture, dripping, or splashing, and no objects filled with liquids should be placed on top of it.

**19** Do not use extension cords or ungrounded (two prong) adapters. If the power cord is too short, have a qualified electrician install an outlet near your refrigerator. Use of an extension cord can negatively affect your refrigerator's performance.

**20** Your refrigerator is not intended for use by persons (including children) with reduced physical, sensory, or mental capabilities, or lack of experience and knowledge, unless they have been given supervision or instruction concerning use of your refrigerator by a person responsible for their safety.

**21** Children should be supervised to ensure that they do not play with your refrigerator.

**22** If the power cord is damaged, it must be replaced by the manufacturer, its service agent, or similarly qualified person, in order to avoid a hazard.

NS-CF17BK9_26BK9_26WH9_17-0786__MAN_V1_EN.fm Page 4 Tuesday, December 19, 2017 9:12 AM



## WARNING

**Electric Shock Hazard**

**Failure to follow these instructions can result in electric shock, fire, or death.**




1 **WARNING**–Keep ventilation openings, in both your refrigerator enclosure and the built-in structure, clear of obstruction.

2 **WARNING**–Do not touch the interior of your refrigerator with wet hands. This could result in frostbite.

3 **WARNING**–Do not use mechanical devices or other means to accelerate the defrosting process, other than those recommended by the manufacturer.

4 **WARNING**–Do not use electrical appliances inside the food storage compartment of the refrigerator, unless they are of the type recommended by the manufacturer.

5 **WARNING**–Do not damage the refrigerant circuit when handling, moving, or using your refrigerator.

6 **WARNING**–**DANGER**—Never allow children to play with, operate, or crawl inside your refrigerator.

**Risk of child entrapment.** Before you throw away your old refrigerator:

- Take off the door.
- Leave the shelves in place so that children may not easily climb inside.

7 Unplug your refrigerator before carrying out user maintenance on it.

8 If a component part is damaged, it must be replaced by the manufacturer, its service agent, or similar qualified persons in order to avoid a hazard.

9 Follow local regulations regarding disposal of your refrigerator due to flammable refrigerant and gas. All refrigeration products contain refrigerants, which under the guidelines of federal law must be removed before disposal. It is the consumer's responsibility to comply with federal and local regulations when disposing of this product.

10 Your refrigerator is intended to be used in household and similar environments.

11 Do not store or use gasoline or any flammable liquids inside or in the vicinity of your refrigerator.

### Grounding requirement

Your refrigerator must be grounded. Your refrigerator is equipped with a cord having a grounding wire with a grounding plug. The plug must be inserted into an outlet that is correctly installed and grounded.

Incorrect use of the grounding plug can result in a risk of electric shock. Consult a qualified electrician or service person if the grounding instructions are not completely understood, or if doubt exists as to whether your refrigerator is correctly grounded.

NS-CF17BK9_26BK9_26WH9_17-0786__MAN_V1_EN.fm Page 5 Tuesday, December 19, 2017 9:12 AM



# Features

## Package contents

- 1.7 or 2.6 Cu. Ft. Compact Refrigerator
- *User Guide*

## Exterior

***1.7 cu. ft. refrigerator***

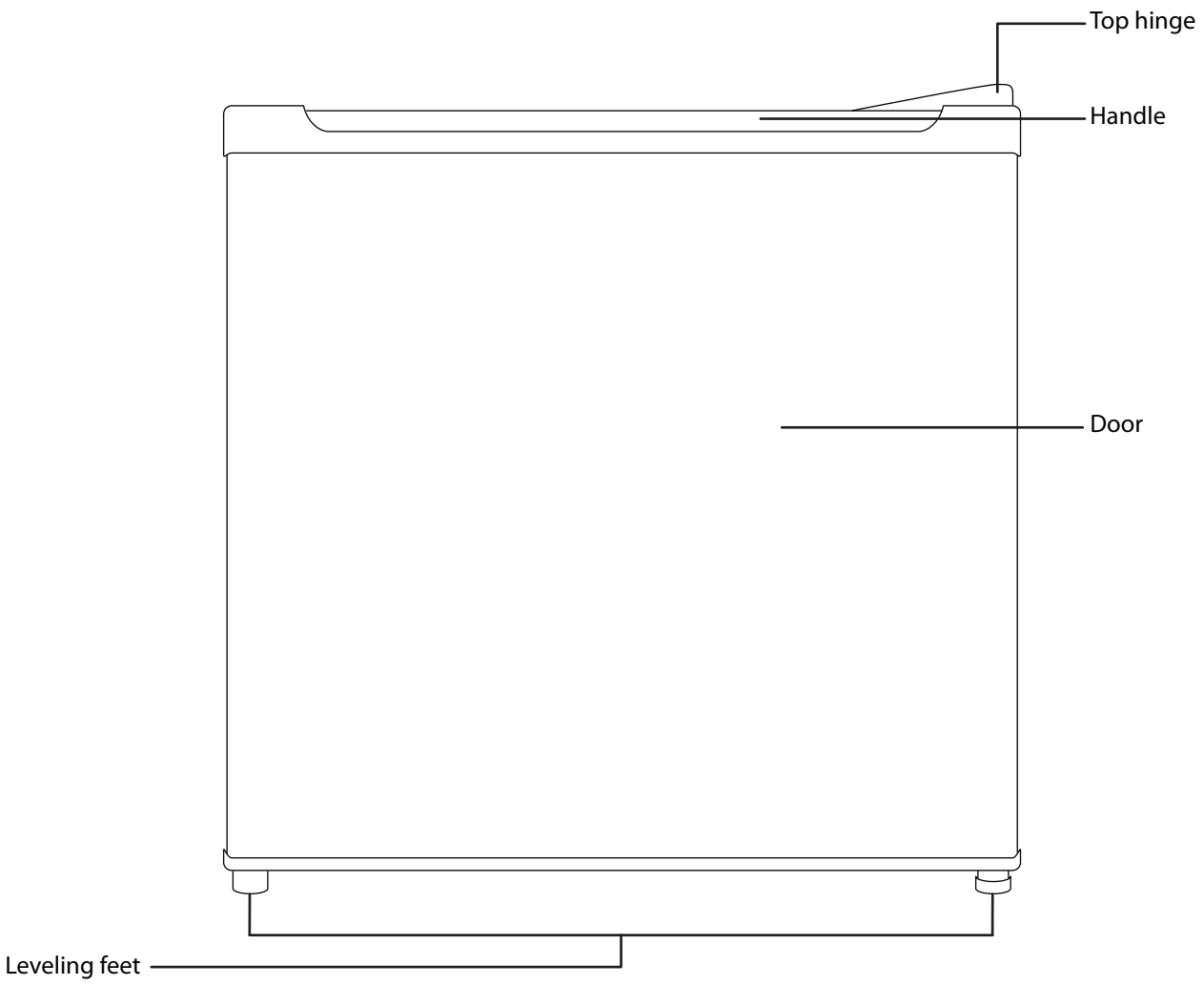

NS-CF17BK9_26BK9_26WH9_17-0786__MAN_V1_EN.fm Page 6 Tuesday, December 19, 2017 9:12 AM



***2.6 cu. ft. refrigerator***

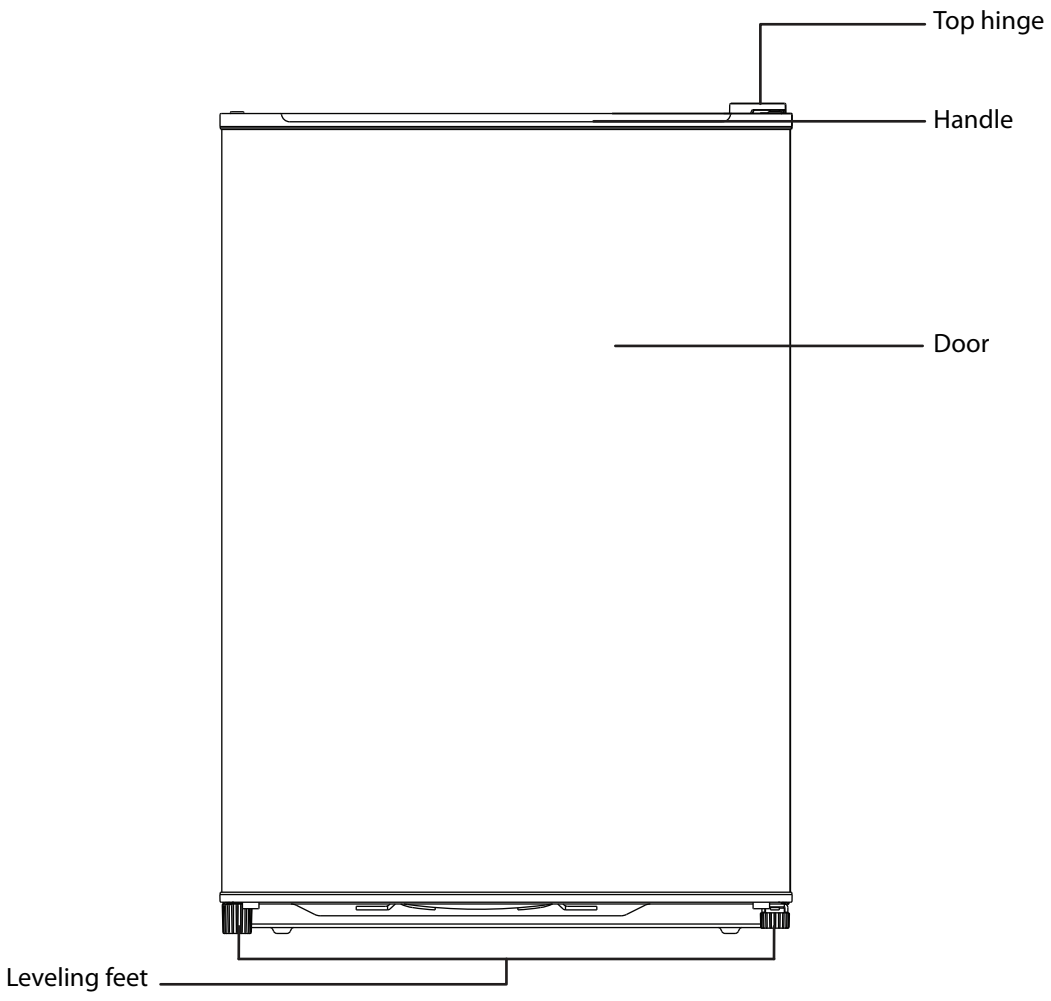

NS-CF17BK9_26BK9_26WH9_17-0786__MAN_V1_EN.fm Page 7 Tuesday, December 19, 2017 9:12 AM



## Interior

***1.7 cu. ft. refrigerator***

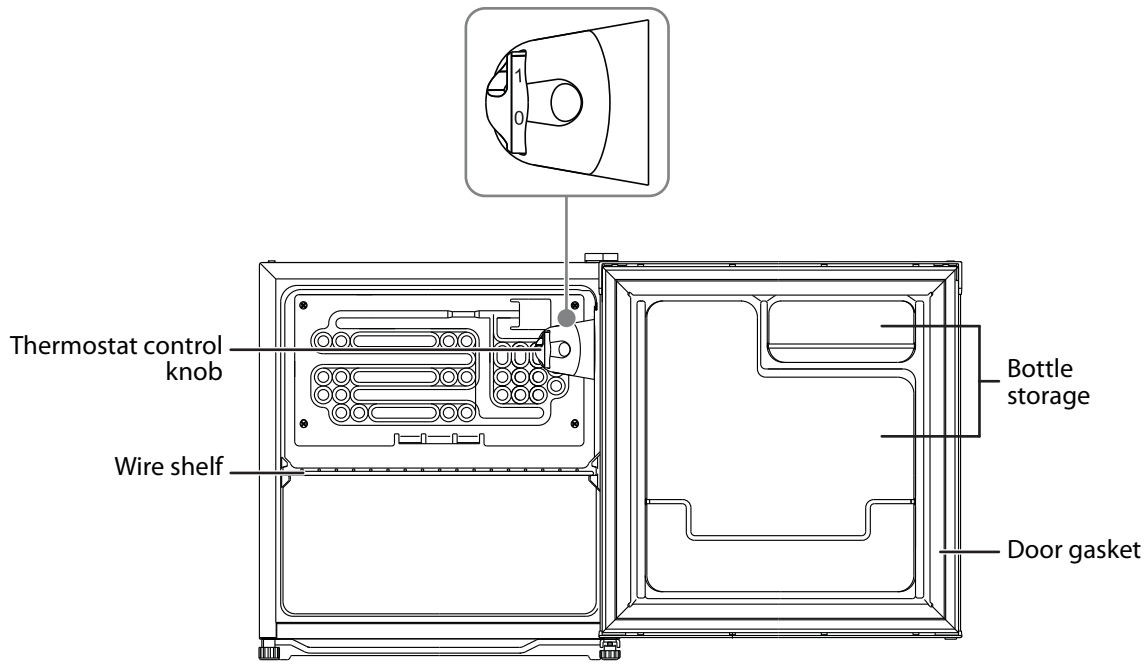


***2.6 cu. ft. refrigerator***

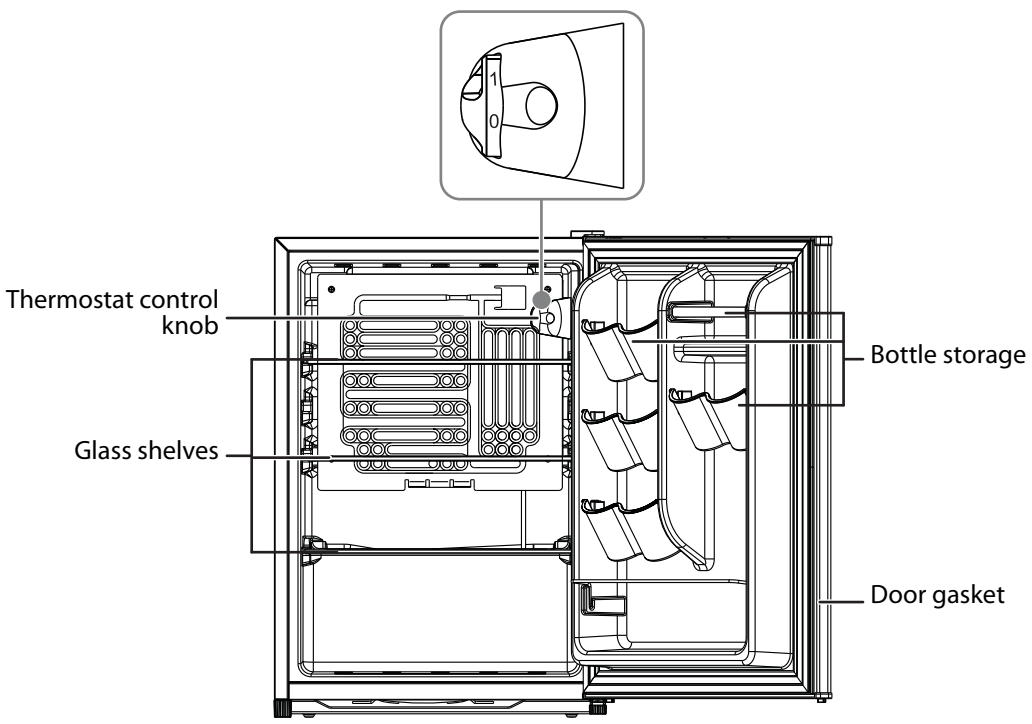


# Setting up your refrigerator

## Before using your refrigerator

- Remove the exterior and interior packing.
- Wash the inside with a damp, warm cloth and a baking soda solution (two tablespoons in a quart of water), then wipe dry with a dry cloth. Do this periodically to keep your refrigerator looking new.
- Level your refrigerator using the leveling feet. If you do not level your refrigerator, the door may not close or seal correctly, causing cooling, frost, and moisture problems. Turn the leveling feet clockwise to raise or counterclockwise to lower a side.

NS-CF17BK9_26BK9_26WH9_17-0786__MAN_V1_EN.fm Page 8 Tuesday, December 19, 2017 9:12 AM



## Finding a suitable location

- Allow 5 inches (12.7 cm) of space between the back and sides of your refrigerator and any surrounding walls. This allows proper air ventilation.
- Adjust the feet to keep your refrigerator level.
- If you locate your refrigerator next to a wall, allow sufficient space on the hinge side for the door to swing open.
- Position your refrigerator away from direct sunlight and sources of heat, such as a stove, heater, or radiator. Direct sunlight may affect the acrylic coating and heat sources may increase electrical consumption. Extremely cold temperatures may also prevent your refrigerator from performing correctly.

## Providing the correct power source

Check your local power source. Your refrigerator requires a 115V, 60Hz power supply.

**WARNINGS:**
Make sure that:
- The power outlet accepts a 3-prong grounding plug. The third prong on the power cord plug grounds your refrigerator to minimize the possibility of electric shock. Do not modify the power plug.
- You do NOT plug anything else into the same power outlet as your refrigerator. You may overload the circuit which can cause a fire.
- You do NOT use an extension cord. If your refrigerator is too far from the power outlet, move your refrigerator or have a electrician install a plug closer to your refrigerator.
- The power outlet cannot be turned off with a switch or pull string.

Using a 3-prong plug and outlet

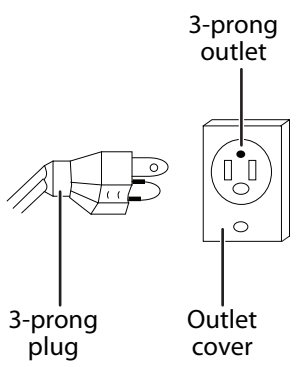


Using a grounding adapter

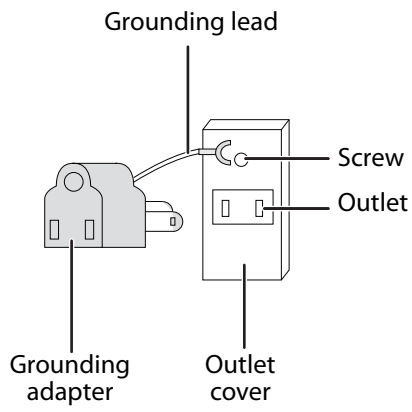


## Leveling your refrigerator

- Leveling your refrigerator is important. If you do not level your refrigerator during installation, the doors may not close or seal correctly which can cause cooling, frost, or moisture problems.
- To level your refrigerator, rotate the leveling feet clockwise (to raise) your refrigerator or counter-clockwise (to lower).

**Note:** To make it easier to adjust the feet, have someone push against the top of your refrigerator to tilt it slightly.

## Reversing the refrigerator door

**CAUTIONS:**
- To avoid serious injury or death from electrical shock, unplug your refrigerator before you reverse the door.
- To remove the door, you have to tilt your refrigerator backwards. To avoid personal injury and property damage, get another person to tilt your refrigerator while you reverse the door. You can also lean your refrigerator against something solid, like a chair, just below the top panel.
- DO NOT lay your refrigerator flat because you may damage the coolant system.

You will need the following tools to reverse the refrigerator door:



10 mm nut driver

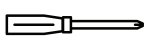

Phillips screwdriver

1. Unplug your refrigerator, then remove all contents.
2. Adjust the leveling feet to their highest positions.
3. Remove the screw holding the top hinge cover to the top of your refrigerator, then remove the cover.
4. Remove the screws and pin holding the top hinge to your refrigerator, then remove the hinge.

NS-CF17BK9_26BK9_26WH9_17-0786__MAN_V1_EN.fm Page 9 Tuesday, December 19, 2017 9:12 AM



**5** Pry off the screw hole covers from the other side of your refrigerator.

**1.7 cu. ft. refrigerator**

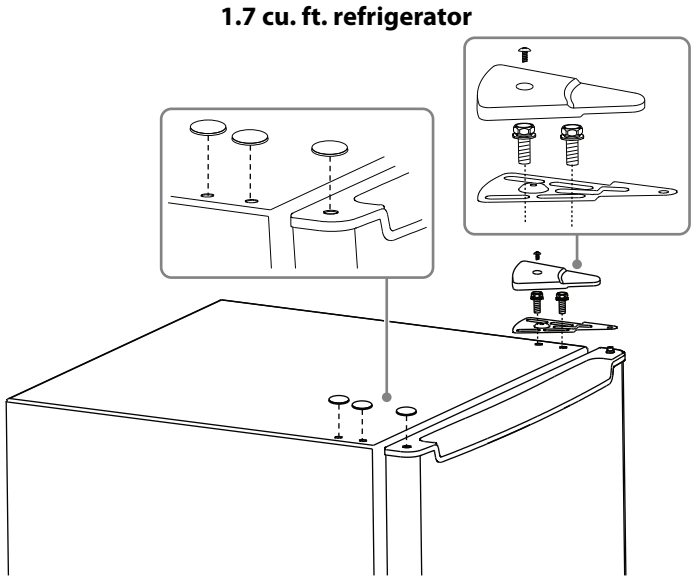

**2.6 cu. ft. refrigerator**

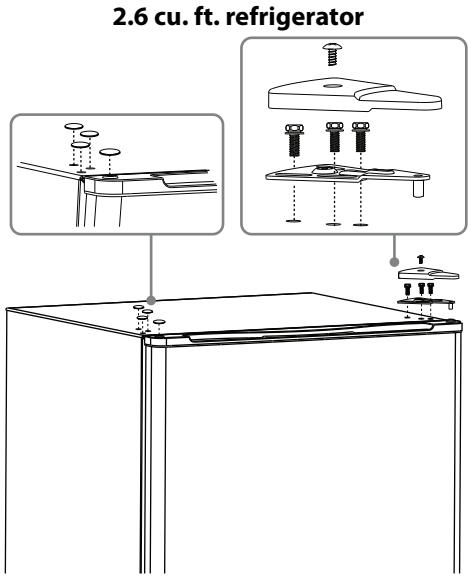

**6** Pull the door upward and remove it from your refrigerator.

**7** Remove the leveling foot from the bottom left of your refrigerator.

**8** Remove the screws that secure the bottom hinge bracket.

**9** (**2.6 cu. ft. refrigerator only**) Remove the door stopper.

**1.7 cu. ft. refrigerator**

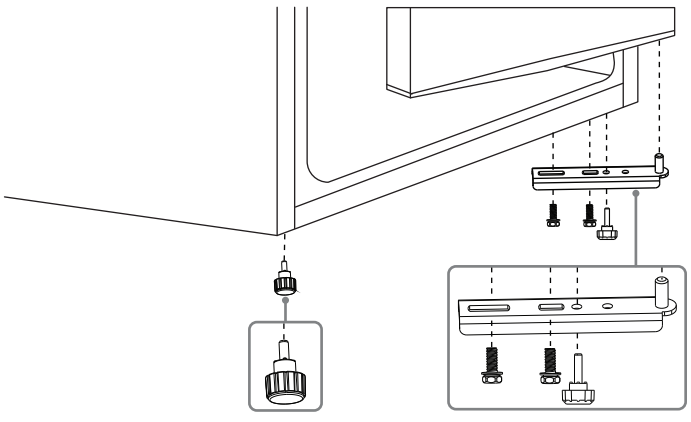

**2.6 cu. ft. refrigerator**

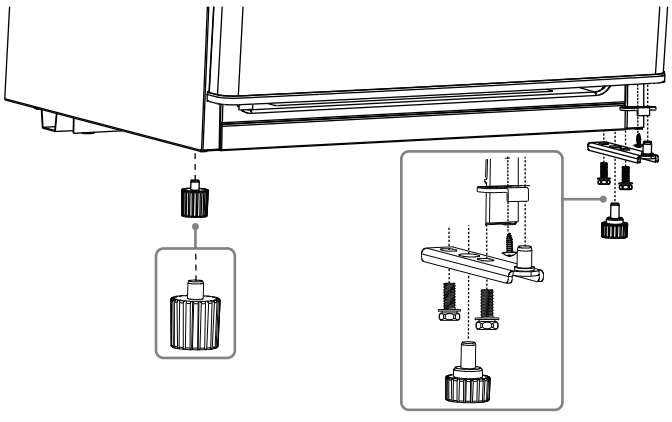

**10** Install the leveling foot, bottom hinge bracket, and door stopper (2.6 cu. ft. refrigerator only) on the left side of your refrigerator, then tighten the screws.

**1.7 cu. ft. refrigerator**

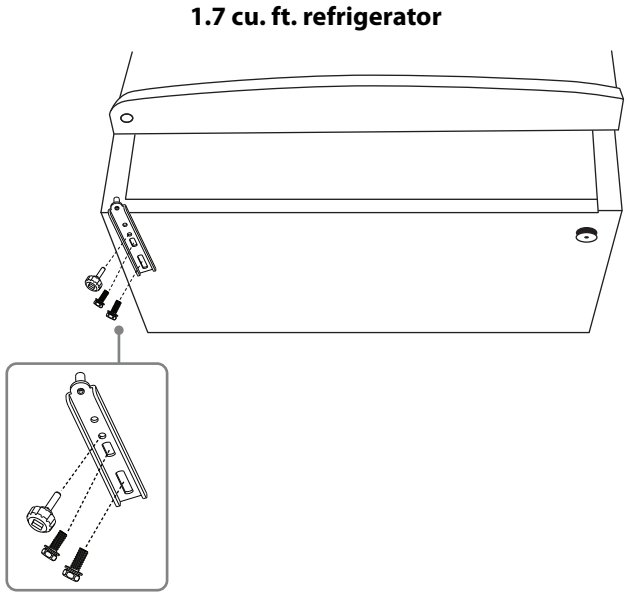

**2.6 cu. ft. refrigerator**

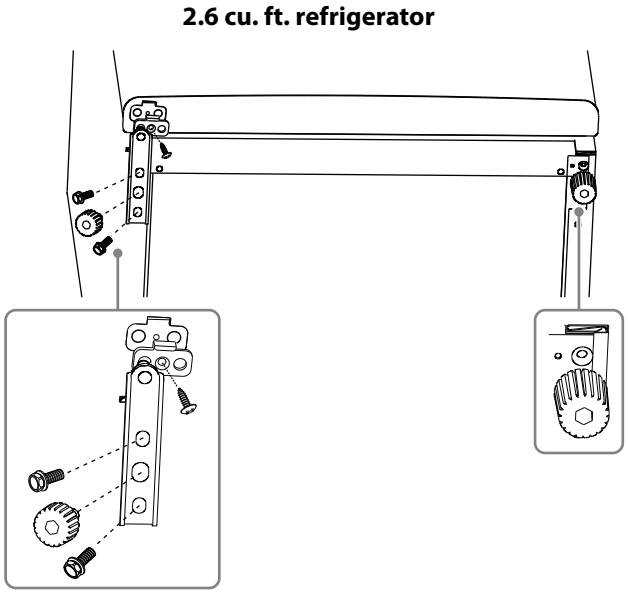

NS-CF17BK9_26BK9_26WH9_17-0786__MAN_V1_EN.fm Page 10 Tuesday, December 19, 2017 9:12 AM



**11** Align the door bottom so that the pin on the hinge slides into the hole in the door bottom.

**12** Align the hinge with the screw holes on the door and the hole in the top edge of the door. Slide the pin through the hole in the hinge and into the hole on the top edge of the door. Use the screws to attach the hinge to your refrigerator, but do not tighten the hinge screws. Place the hole cover over the hinge opening on the other side of the door.

**1.7 cu. ft. refrigerator**

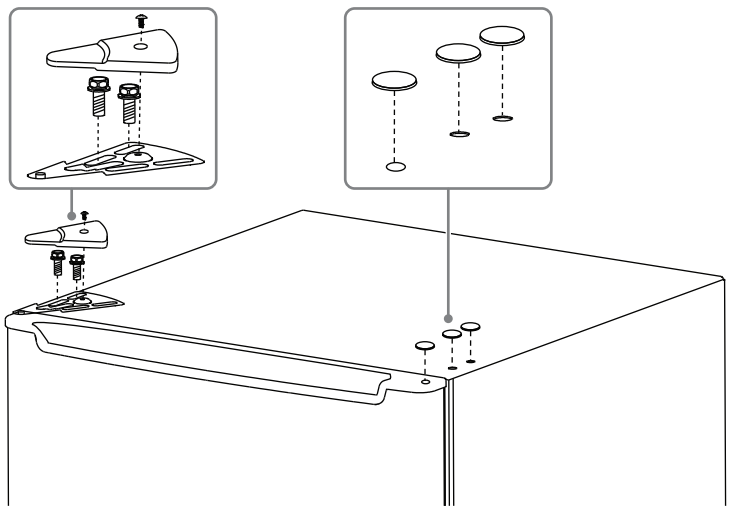

**2.6 cu. ft. refrigerator**

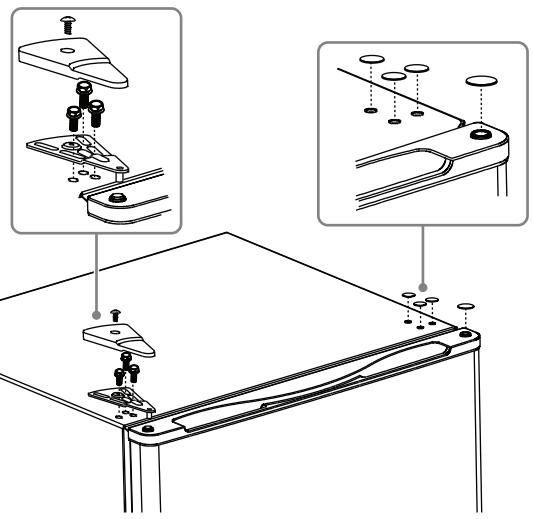

**13** Make sure that the door seals are snug on all sides when the door is closed, then tighten the upper hinge screws. Adjust the leveling feet to level the refrigerator.

**1.7 cu. ft. refrigerator**

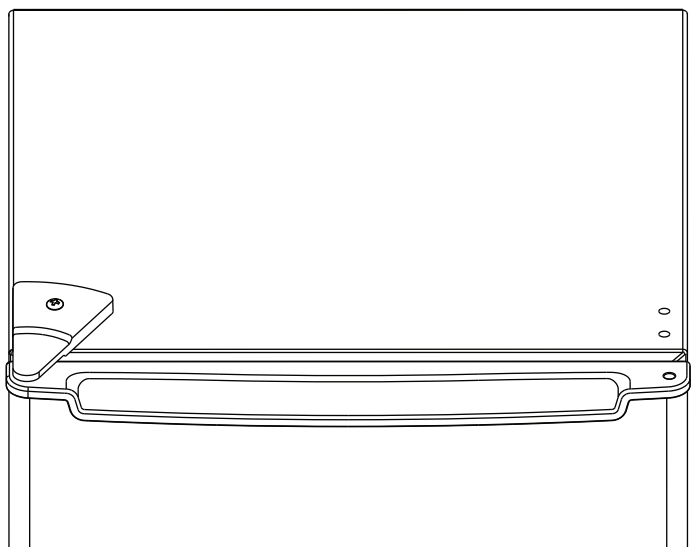

**2.6 cu. ft. refrigerator**

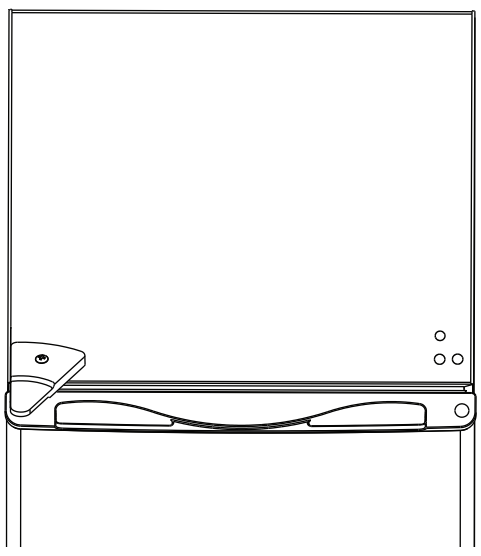

NS-CF17BK9_26BK9_26WH9_17-0786__MAN_V1_EN.fm Page 11 Tuesday, December 19, 2017 9:12 AM



## Setting the thermostat

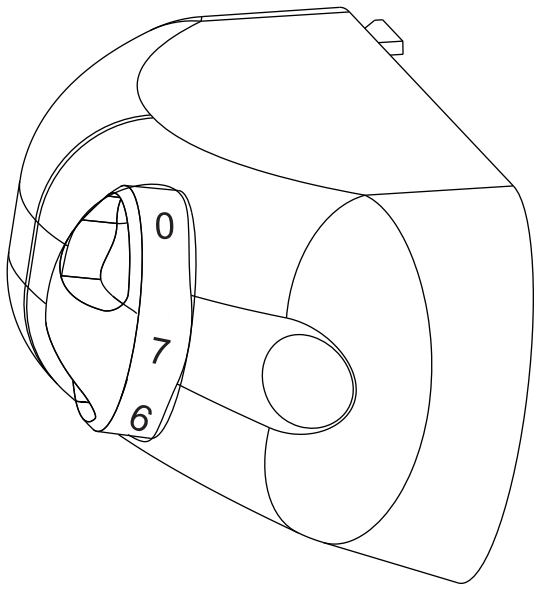


1. The first time you turn the refrigerator on, adjust the thermostat to **4** and give your refrigerator enough time to cool before putting food in. We recommend 24 hours.
2. After it is fully cooled, test it and adjust toward **1** to make it warmer or toward **7** to make it cooler. The **4** setting should be appropriate for home or office refrigerator use. To turn off the refrigerator, set the thermostat to **0**.

**Notes:**
- Turning the thermostat to **0** stops the cooling cycle but does not shut off the power to the refrigerator.
- If the refrigerator is unplugged or loses power, you must wait three to five minutes before restarting it. If you attempt to restart before this time delay, the refrigerator will not start.
- Large amounts of food will lower the cooling efficiency of the refrigerator.
- If you change the thermostat setting, adjust it one increment at a time. Wait several hours for the temperature to stabilize between adjustments.

## Defrosting your refrigerator

**Tip:** To avoid standing water when you defrost, place some towels on the floor in front of your refrigerator.

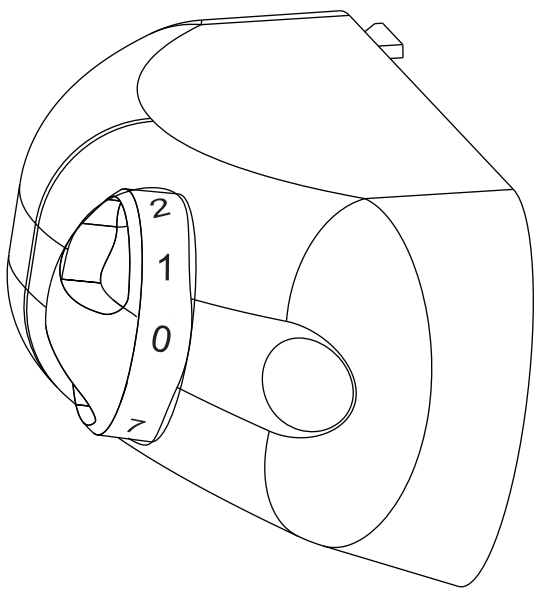


1. Set the thermostat to **0** and leave the refrigerator door open.
2. Remove all food from the refrigerator compartment.
3. Clean out the melted frost with a cloth. If there is excessive frost or ice, place a towel under your refrigerator or move the refrigerator outdoors to prevent water damage.
4. After defrosting, turn the thermostat to the original position.

NS-CF17BK9_26BK9_26WH9_17-0786__MAN_V1_EN.fm Page 12 Tuesday, December 19, 2017 9:12 AM



## Shutting down your refrigerator for a long time (several months)

1. Turn off your refrigerator and unplug it from the wall outlet.
2. Remove all food.
3. Clean your refrigerator.
4. Leave the door open slightly to avoid possible formation of condensation, mold, or odor.

**CAUTION:** Use extreme caution with children. Do not let children play with your refrigerator.

## Moving your refrigerator

1. Turn off your refrigerator and unplug it from the wall outlet.
2. Remove all food.
3. Securely tape down all loose items inside your refrigerator.
4. Tape the doors shut.
5. Make sure that your refrigerator stays in the upright position during transportation.

## Tips on saving energy

- Locate your refrigerator in the coolest area of the room, away from heat producing appliances or heating ducts and out of direct sunlight.
- Let hot foods cool to room temperature before placing them in your refrigerator. Overloading your refrigerator forces the compressor to run longer.
- Wrap foods correctly and wipe containers dry before placing them in your refrigerator. This cuts down on frost build-up inside your refrigerator.
- Organize and label food to reduce door openings and extended searches.

## Troubleshooting

| PROBLEM | POSSIBLE CAUSE | POSSIBLE SOLUTION |
|---|---|---|
| My refrigerator does not operate | Your refrigerator is unplugged. | Make sure that your refrigerator is plugged in and that the plug is pushed completely into the outlet. |
| | The thermostat is set to **0**. | Turn the thermostat knob to **4**. |
| | The fuse on the circuit is blown or the circuit breaker is tripped. | Check the house fuse/circuit breaker box and replace the fuse or reset the circuit breaker. |
| | Power failure. | If a power failure occurs, turn off your refrigerator and unplug the power cord until the power is restored. |
| Food in my refrigerator compartment is freezing | The thermostat is set too low. | Adjust the thermostat to a higher setting. |
| Food in my refrigerator compartment is not cold | The door has been opened too often or was not closed properly. | Make sure that the door is closed properly. |
| | You have just added a large amount of food to your refrigerator or chiller compartment. | Allow time for the new food to cool, then check again. |
| | The thermostat is set too high. | Set the thermostat to a lower setting. |
| My refrigerator makes unusual noises | Your refrigerator may not be level on the floor. | Level your refrigerator with the leveling feet. |
| | The body of your refrigerator is touching a wall. | Move your refrigerator out from the wall. |
| | The drip tray in the back of the refrigerator is not properly placed. | Contact a qualified repair technician to fix the problem. |

NS-CF17BK9_26BK9_26WH9_17-0786__MAN_V1_EN.fm Page 13 Tuesday, December 19, 2017 9:12 AM



| PROBLEM | POSSIBLE CAUSE | POSSIBLE SOLUTION |
|---|---|---|
| Moisture is building up in the interior of my refrigerator | The door has been opened too often or was not closed properly. | Make sure that the door is closed properly. |
| | Your refrigerator is in a location that is too humid. | Move your refrigerator to a dryer location. |
| | The food in your refrigerator is not packaged properly. | Repackage the food in your refrigerator to make sure that it is sealed. |
| The refrigerator door does not close completely | Food packages are interfering with the door. | Move the food packages or remove some food. |
| | The shelf is out of position. | Make sure that the shelf is seated correctly. |
| | The door gasket is dirty. | Clean the door gasket. |
| | Your refrigerator is not level. | Level your refrigerator with the leveling feet. |
| My refrigerator has a bad odor. | The food in your refrigerator is not packaged properly. | Make sure that all food with a strong odor (like onions) is wrapped or stored in airtight packaging. |
| | The packaging material may cause odors. | Certain containers and wrapping materials (such as paper, foil, or plastic) can cause odors. If you think this might be the case, try using different containers or a different brand of wrapping material. |
| | Food may be spoiled. | Check for spoiled food and remove it. |
| | Food may have spilled inside your refrigerator. | Clean the inside of your freezer. |

NS-CF17BK9_26BK9_26WH9_17-0786__MAN_V1_EN.fm Page 14 Tuesday, December 19, 2017 9:12 AM



# Specifications

***1.7 cu. ft. refrigerator***

| | |
|---|---|
| Dimensions (W × D × H) | 17.4 × 18.9 × 19.5 in. (44.2 × 48 × 49.3 cm) |
| Weight | **Gross Weight:** 37.1 lbs (16.8 kg)<br>**Net Weight:** 32.8 lbs (14.9 kg) |
| Power requirements | AC115V~60Hz |
| Current | 1.5A |
| Power cord length | 4.9 ft. (1.5m) |
| Power consumption per year | 245 kwh |
| Average life expectancy | 5 years |
| Thermostat control knob | Settings: 0 through 7 |

***2.6 cu. ft. refrigerator***

| | |
|---|---|
| Dimensions (W × D × H) | 19.1 × 17.7 × 27.6 in. (48.5 × 45 × 70.1 cm) |
| Weight | **Gross Weight:** 50.3 lbs (22.8 kg)<br>**Net Weight:** 44.3 lbs (20.1 kg) |
| Power requirements | AC115V~60Hz |
| Current | 1.5A |
| Power cord length | 4.9 ft. (1.5m) |
| Power consumption per year | 250 kwh |
| Average life expectancy | 5 years |
| Thermostat control knob | Settings: 0 through 7 |

NS-CF17BK9_26BK9_26WH9_17-0786__MAN_V1_EN.fm Page 15 Tuesday, December 19, 2017 9:12 AM



# ONE-YEAR LIMITED WARRANTY

### *Definitions:*

The Distributor* of Insignia branded products warrants to you, the original purchaser of this new Insignia-branded product ("Product"), that the Product shall be free of defects in the original manufacturer of the material or workmanship for a period of one (1) year from the date of your purchase of the Product ("Warranty Period").

For this warranty to apply, your Product must be purchased in the United States or Canada from a Best Buy branded retail store or online at www.bestbuy.com or www.bestbuy.ca, and is packaged with this warranty statement.

### *How long does the coverage last?*

The Warranty Period lasts for 1 year (365 days) from the date you purchased the Product. Your purchase date is printed on the receipt you received with the Product.

### *What does this warranty cover?*

During the Warranty Period, if the original manufacture of the material or workmanship of the Product is determined to be defective by an authorized Insignia repair center or store personnel, Insignia will (at its sole option): (1) repair the Product with new or rebuilt parts; or (2) replace the Product at no charge with new or rebuilt comparable products or parts. Products and parts replaced under this warranty become the property of Insignia and are not returned to you. If service of Products or parts are required after the Warranty Period expires, you must pay all labor and parts charges. This warranty lasts as long as you own your Insignia Product during the Warranty Period. Warranty coverage terminates if you sell or otherwise transfer the Product.

### *How to obtain warranty service?*

If you purchased the Product at a Best Buy retail store location, please take your original receipt and the Product to any Best Buy store. Make sure that you place the Product in its original packaging or packaging that provides the same amount of protection as the original packaging. If you purchased the Product from a Best Buy online web site (www.bestbuy.com or www.bestbuy.ca), mail your original receipt and the Product to the address listed on the web site. Make sure that you put the Product in its original packaging or packaging that provides the same amount of protection as the original packaging.

To obtain warranty service, in the United States call 1-888-BESTBUY, Canada call 1-866-BESTBUY. Call agents may diagnose and correct the issue over the phone.

### *Where is the warranty valid?*

This warranty is valid only in the United States and Canada at Best Buy branded retail stores or websites to the original purchaser of the product in the county where the original purchase was made.

### *What does the warranty not cover?*

This warranty does not cover:

- Food loss/spoilage due to failure of refrigerator or freezer
- Customer instruction/education
- Installation
- Set up adjustments
- Cosmetic damage
- Damage due to weather, lightning, and other acts of God, such as power surges
- Accidental damage
- Misuse
- Abuse
- Negligence
- Commercial purposes/use, including but not limited to use in a place of business or in communal areas of a multiple dwelling condominium or apartment complex, or otherwise used in a place of other than a private home.
- Modification of any part of the Product, including the antenna
- Display panel damaged by static (non-moving) images applied for lengthy periods (burn-in).
- Damage due to incorrect operation or maintenance
- Connection to an incorrect voltage or power supply
- Attempted repair by any person not authorized by Insignia to service the Product
- Products sold "as is" or "with all faults"
- Consumables, including but not limited to batteries (i.e. AA, AAA, C etc.)
- Products where the factory applied serial number has been altered or removed
- Loss or Theft of this product or any part of the product
- Display panels containing up to three (3) pixel failures (dots that are dark or incorrectly illuminated) grouped in an area smaller than one tenth (1/10) of the display size or up to five (5) pixel failures throughout the display. (Pixel based displays may contain a limited number of pixels that may not function normally.)
- Failures or Damage caused by any contact including but not limited to liquids, gels or pastes.

REPAIR REPLACEMENT AS PROVIDED UNDER THIS WARRANTY IS YOUR EXCLUSIVE REMEDY FOR BREACH OF WARRANTY. INSIGNIA SHALL NOT BE LIABLE FOR ANY INCIDENTAL OR CONSEQUENTIAL DAMAGES FOR THE BREACH OF ANY EXPRESS OR IMPLIED WARRANTY ON THIS PRODUCT, INCLUDING, BUT NOT LIMITED TO, LOST DATA, LOSS OF USE OF YOUR PRODUCT, LOST BUSINESS OR LOST PROFITS. INSIGNIA PRODUCTS MAKES NO OTHER EXPRESS WARRANTIES WITH RESPECT TO THE PRODUCT, ALL EXPRESS AND IMPLIED WARRANTIES FOR THE PRODUCT, INCLUDING, BUT NOT LIMITED TO, ANY IMPLIED WARRANTIES OF AND CONDITIONS OF MERCHANTABILITY AND FITNESS FOR A PARTICULAR PURPOSE, ARE LIMITED IN DURATION TO THE WARRANTY PERIOD SET FORTH ABOVE AND NO WARRANTIES, WHETHER EXPRESS OR IMPLIED, WILL APPLY AFTER THE WARRANTY PERIOD. SOME STATES, PROVINCES AND JURISDICTIONS DO NOT ALLOW LIMITATIONS ON HOW LONG AN IMPLIED WARRANTY LASTS, SO THE ABOVE LIMITATION MAY NOT APPLY TO YOU. THIS WARRANTY GIVES YOU SPECIFIC LEGAL RIGHTS, AND YOU MAY ALSO HAVE OTHER RIGHTS, WHICH VARY FROM STATE TO STATE OR PROVINCE TO PROVINCE.

Contact Insignia:

For customer service please call 1-877-467-4289

www.insigniaproducts.com

INSIGNIA is a trademark of Best Buy and its affiliated companies.

Distributed by Best Buy Purchasing, LLC
7601 Penn Ave South, Richfield, MN 55423 U.S.A.

©2017 Best Buy. All rights reserved.

**Made in China**

NS-CF17BK9_26BK9_26WH9_17-0786__MAN_V1_EN.fm Page 16 Tuesday, December 19, 2017 9:12 AM

INSIGNIA™

**For product inquiries, please contact us with the information below:**
**1-877-467-4289**
**www.insigniaproducts.com**
INSIGNIA is a trademark of Best Buy and its affiliated companies.
Distributed by Best Buy Purchasing, LLC
7601 Penn Ave South, Richfield, MN 55423 U.S.A.
©2017 Best Buy. All rights reserved.
**Made in China**

V1 ENGLISH
17-0786